COMMUNICATIONS SERVICE MONITOR

2947

SERVICE

© Marconi Instruments Ltd. 1995

No part of this book may be reproduced or transmitted in any form or by any means, electronic or mechanical, including photocopying, or recorded by any information storage or retrieval system, without permission in writing by Marconi Instruments Ltd.

Printed in the UK

Manual part no. 46882-286Z
Issue 1

July 1996

About this manual

This manual provides servicing information to component level for the 2947 Communications Service Monitor.

Intended audience

The book is intended for qualified service engineers and assumes a knowledge of the instrument to a level covered in Operating Manual 46882-159J.

Structure

Chapter 1 Technical description

This includes block diagrams and detailed board circuit descriptions. The circuit descriptions refer directly to the servicing diagrams contained in Chapter 7.

Chapter 2 Access and layout

Refer to this chapter for board and unit access, and routine safety testing and inspection.

Chapter 3 Adjustment and calibration

Refer to this chapter for information on user calibrations, software calibrations and hardware adjustments

Chapter 4 Initial repair

This chapter contains information regarding simple fault finding.

Chapter 5 Fault finding

The information in this chapter is in flow chart form, giving several levels of fault diagnosis information from very basic repair down to board component level.

Chapter 6 Replaceable parts

Contains electronic components and mechanical parts of boards and complete assembly.

Chapter 7 Servicing diagrams

Contains interconnection drawings, board circuits and board component layout drawihngs.

Associated publications

Operating Manual 46882-285A

Contents

Precautions v

Chapter 1 TECHNICAL DESCRIPTION 1-1

Chapter 2 ACCESS AND LAYOUT 2-1

Chapter 3 ADJUSTMENT AND CALIBRATION 3-1

Chapter 4 INITIAL REPAIR 4-1

Chapter 5 FAULT DIAGNOSIS 5-1

Chapter 6 REPLACEABLE PARTS 6-1

Chapter 7 SERVICING DIAGRAMS 7-1

Precautions

WARNING | CAUTION | Note

These terms have specific meanings in this manual:

WARNING **information to prevent personal injury.**

CAUTION **information to prevent damage to the equipment.**

Note **important general information.**

Hazard symbols

The meaning of hazard symbols appearing on the equipment is as follows:

Symbol	Nature of hazard	Reference in manual
	Dangerous voltage	Page iv
	Toxic hazard	Page v
	Static sensitive components	Page v
	Fire hazard	Page v
	Lithium battery	Page v
	Hot surface	Page v
	Input overload	Page vi

Safety

This product has been designed and tested in accordance with BS4743 'Specification for safety requirements for electronic measuring apparatus' and IEC Publication 348 'Safety requirements for electronic measuring apparatus'.

WARNING

Electrical Hazards

AC supply voltage

This equipment conforms with IEC Safety Class 1, meaning that it is provided with a protective grounding lead. To maintain this protection the supply lead must always be connected to the source of supply via a socket with a grounded contact.

Be aware that the supply filter contains capacitors that may remain charged after the equipment is disconnected from the supply. Although the stored energy is within the approved safety requirements, a slight shock may be felt if the plug pins are touched immediately after removal.

Fuses

Note that the internal supply fuse is in series with the live (brown) conductor of the supply lead. If connection is made to a 2-pin unpolarized supply socket, it is possible for the fuse to become

transposed to the neutral conductor, in which case, parts of the equipment could remain at supply potential even after the fuse has ruptured.

Removal of covers

Disconnect the supply before removing the covers so as to avoid the risk of exposing high voltage parts. If any internal adjustment or servicing has to be carried out with the supply on, it must only be performed by a skilled person who is aware of the hazard involved.

WARNING

Fire Hazard

Make sure that only fuses of the correct rating and type are used for replacement.

If an integrally fused plug is used on the supply lead, ensure that the fuse rating is commensurate with the current requirements of this equipment.

WARNING

Toxic Hazards

Some of the components used in this equipment may include resins and other materials which give off toxic fumes if incinerated. Take appropriate precautions, therefore, in the disposal of these items.

Lithium

A Lithium battery (or a Lithium battery contained within an IC) is used in the following components in this equipment:

IC10	B2/1	46830/110
IC20	B3	28469/910
IC21	B3	25469/910
IC9	B12	46830/114

As Lithium is a toxic substance, the battery should in no circumstances be crushed, incinerated or disposed of in normal waste.

Do not attempt to recharge this type of battery. Do not short circuit or force discharge since this might cause the battery to vent, overheat or explode.

WARNING

Hot Surfaces

Take care when touching the RF Input Type N connector after the application of high levels of continuous power. If 50 W is exceeded for a prolonged period, the temperature of the connector can become excessive.

CAUTION

Static Sensitive Components

The presence of static sensitive components is indicated in the equipment by yellow disks, flags or labels bearing the symbol . Certain handling precautions should be observed to prevent these components being permanently damaged by static charges or fast surges.

(1) If a printed board containing static sensitive components (as indicated by warning disk or flag) is removed, it must be temporarily stored in a conductive plastic bag.

(2) If a static sensitive component is to be removed or replaced, the following anti-static equipment should be used:

A **work bench** with a grounded conductive surface.

Metallic tools grounded either permanently or by repeated discharges.

A **low-voltage** grounded soldering iron.

A **grounded wrist strap** and a conductive **grounded seat cover** for the operator whose outer clothing should not be of man-made fibre.

(3) As a general precaution, avoid touching the leads of a static sensitive component. When handling a new one, leave it in its conducting mount until it is required for use.

(4) If using a freezer aerosol in fault finding, take care not to spray programmable ICs as this may affect their contents.

WARNING

Input overload

On the RF N connector the input power should not exceed 150 W.

On the RF BNC ANTENNA the input power should not exceed 5 W.

On the RF BNC output connector, the input power should not exceed 5 W.

WARNING

Tilt Facility

When the instrument is in the tilt position, it is advisable, for stability reasons, not to stack other instruments on top of it.

CAUTION

THIS EQUIPMENT CONTAINS PARTS AND ASSEMBLIES SENSITIVE TO DAMAGE BY ELECTROSTATIC DISCHARGE (ESD). USE ESD PRECAUTIONARY PROCEDURES WHEN TOUCHING, REMOVING OR INSERTING PRINTED CIRCUIT BOARDS.

ESD
CLASS 1

GENERAL HANDLING PROCEDURES FOR ESDS ITEMS

- USE WRIST GROUND STRAPS OR MANUAL GROUNDING PROCEDURES.
- KEEP ESDS ITEMS IN PROTECTIVE COVERING WHEN NOT IN USE.
- GROUND ALL ELECTRICAL TOOLS AND TEST EQUIPMENT.
- PERIODICALLY CHECK CONTINUITY AND RESISTANCE OF GROUNDING SYSTEM.
- USE ONLY METALIZED SOLDER SUCKERS.
- HANDLE ESDS ITEMS ONLY IN PROTECTED AREAS.

MANUAL GROUNDING PROCEDURES

- MAKE CERTAIN EQUIPMENT IS POWERED DOWN.
- TOUCH GROUND BEFORE REMOVING ESDS ITEMS.
- TOUCH PACKAGE OF REPLACEMENT ESDS ITEM TO GROUND BEFORE OPENING.
- TOUCH GROUND BEFORE INSERTING REPLACEMENT ESDS ITEMS.

ESD PROTECTIVE PACKAGING AND LABELING

- PROTECTIVE COVERING OF ANTISTATIC MATERIAL WITH AN OUTER WRAP OF EITHER TYPE 1 ALUMINIZED MATERIAL OR CONDUCTIVE PLASTIC FILM – OR HYBRID LAMINATED BAGS HAVING AN INTERIOR OF ANTISTATIC MATERIAL WITH AN OUTER METALIZED LAYER.
- LABEL WITH SENSITIVE ELECTRONIC SYMBOL AND CAUTION NOTE.

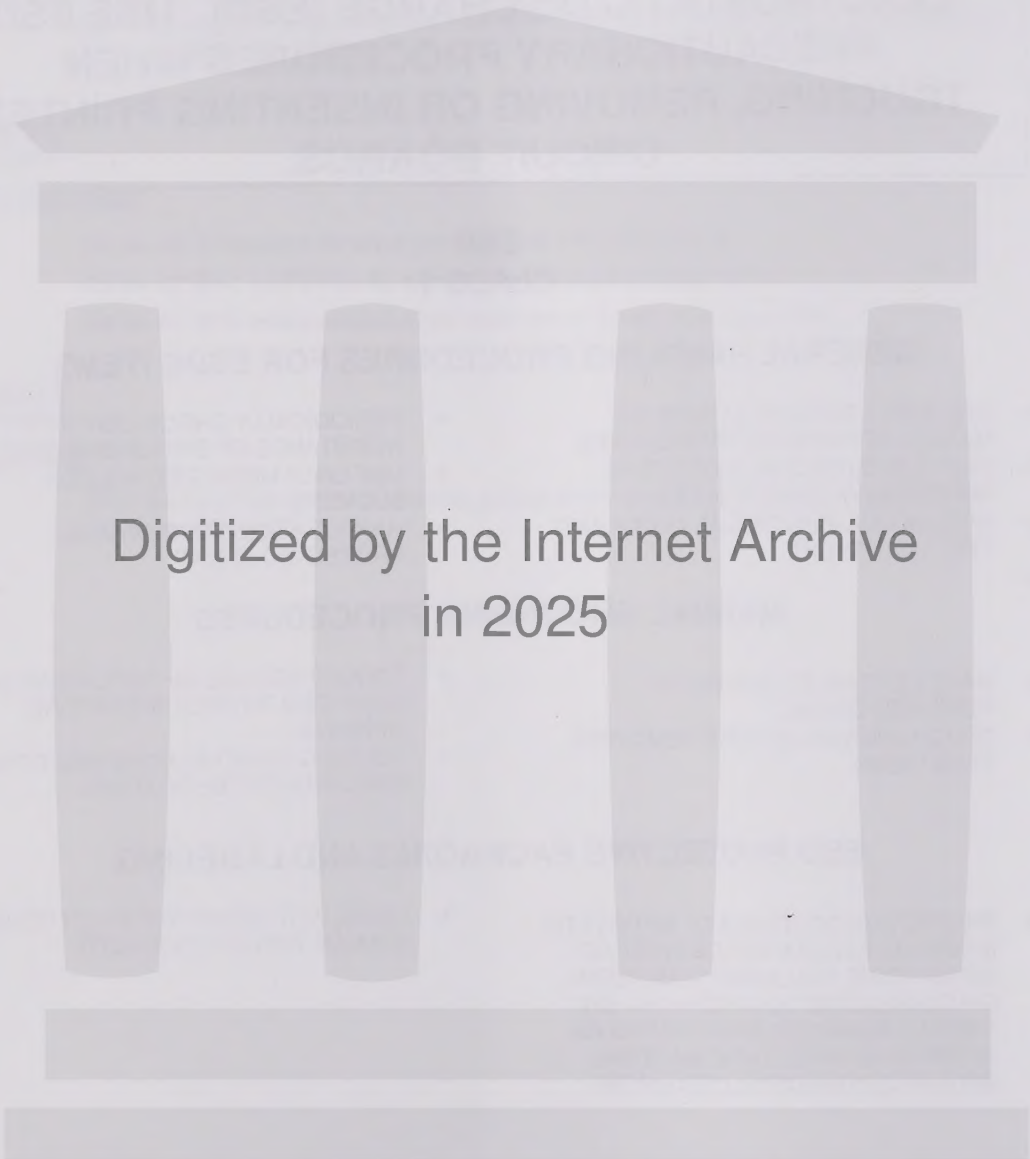

Digitized by the Internet Archive
in 2025

https://archive.org/details/manualsplus_05225

Chapter 1
TECHNICAL DESCRIPTION

Contents

Page

Background 1-3
Overview of operation 1-3
Detailed technical descriptions 1-7
A2 Input mixer (44829/922) 1-7
A3 2nd & 3rd mixer (44829/923) 1-7
A4/1 10.7 MHz IF & log amp (44830/103) 1-8
A6/1 Output amplifier (44829/925) 1-11
A7/1 1st local oscillator control (44830/111) 1-12
A8/1 1st local oscillator (44830/112) 1-12
AA1 Voltage controlled oscillator (41830/160) 1-14
A9/1 2nd & 3rd local oscillator (44830/097) 1-14
A10 90 MHz swept local oscillator (44829/930) 1-15
A11/1 Input switch and power meter (44830-163) 1-17
A15 SSB board (44830/021) 1-19
A20 3 stage attenuator (44829/891) 1-19
A21 2 stage attenuator (44829/892) 1-20
B1/2 Audio processor (44830/180) 1-20
B2/1 Microprocessor board (44830/110) 1-31
RF generator 1-48
C1 RF generator control (44830/113) 1-50
C2 RF oscillator (44830/104) 1-50
C3 RF divider (44830/105) including AF3 Voltage controlled oscillator board (44829/853) 1-54
C4 Bypass board (44830/106) 1-55
C5 BFO board (44830/107) 1-56
C6 RF tray interconnection PCB (44830/108) 1-57
B3/1 Analogue systems card (44830/181) 1-57
B4 600 Ω audio input/output interface (44829/972) 1-61
B7 GPIB interface (44829/991) 1-62
B12 Memory card and date/time clock (44830/114) 1-63

List of tables

Table 1-1 PAL IC18 1-36
Table 1-2 3 to 8 line decoder, IC24 1-36
Table 1-3 3 to 8 line decoder, IC25 1-37
Table 1-4 PAL IC19 1-37
Table 1-5 Microprocessor, IC13 1-37
Table 1-7 LCD backlight level control 1-46
Table 1-8 Spectrum analyzer video bandwidth filter selection 1-47
Table 1-9 Oscilloscope and spectrum analyzer signal routeing 1-48
Table 1-10 Deviation ranges and FM attenuation 1-52
Table 1-11 Set deviation ranges for differing signal generator frequencies 1-53
Table 1-12 Software control C2 1-53
Table 1-13 Software control C3 1-55
Table 1-14 Diode switching levels 1-55

List of figures

Fig.1-1 Simplified block diagram of RF and audio circuits 1-5
Fig. 1-2 Signal routeing for alternative bandwidth filters 1-9

Fig. 1-3 Block diagram of audio generators 1-21
Fig. 1-4 Block diagram of master clock 1-32
Fig. 1-5 Front panel key matrix 1-39
Fig. 1-6 Simplification of keyboard encoding 1-40
Fig. 1-7 Variable control direction determination 1-41
Fig. 1-8 Detailed block diagram of RF oscillator system. 1-49

Background

The technical descriptions in this chapter explain the functions of the various circuits in the Service Monitor. They are intended to assist service engineers, engaged in its maintenance or repair. Technical descriptions of each board or sub-assembly are provided, in alpha-numeric order. As an introduction to these descriptions, a brief insight of the purpose of the Service Monitor and its method of operation is given. For more detailed information consult the operating manual.

Overview of operation

The Communications Service Monitor 2947, is an integrated test instrument primarily designed for testing mobile radio communication equipment. It is AC mains or DC battery powered.

The Service Monitor contains RF and AF signal generator circuits, RF and AF measuring circuits, and a back-lit LCD display for setting up test parameters and presenting test results. Alternative oscilloscope and spectrum analyzer display modes are included.

The SYSTEM test facility, allows radio communication equipment designed to function on automatic systems, to be tested using programs within the Service Monitor.

A microprocessor controls all functions of the instrument.

The Service Monitor can be controlled manually from the front panel, or remotely using RS232 or GPIB interfaces.

Transmitter testing

To test a mobile radio transmitter, the Service Monitor produces an AF signal, which is fed to the AF input of the transmitter.

The RF output from the transmitter is fed to the Service Monitor, usually by direct connection.

Frequency and power measurements are made on the RF signal. Distortion, modulation level, and other measurements are made to the demodulated signal.

The parameters for transmitter testing are set up using the **TRANSMITTER TEST** screen, accessed by pressing the [Tx TEST] key. The test results are also displayed on this screen.

Receiver testing

To test a radio receiver, the Service Monitor generates an RF test signal, which is fed to the receiver, usually by direct connection. The test signal can be FM or AM modulated.

The demodulated output from the receiver is fed to the AF input of the Service Monitor where the parameters of the signal are measured.

The parameters for receiver testing are set up using the **RECEIVER TEST** screen, accessed by pressing the [Rx TEST] key. The test results are also displayed on this screen.

Duplex testing

The Communications Service Monitor 2947 is a duplex instrument.

When carrying out tests on duplex transceivers, the Service Monitor is able to generate modulated RF signals, while providing an AF signal to modulate the transmitter.

The measuring circuits are able to make all measurements to the frequency offset incoming RF signal, including the demodulated signal, and to the AF output of the receiver. The frequency offset between the transmit and the receive signals can also be measured.

The RF input and output connectors can be set for any permutation, to suit 'one port' or 'two port' connections.

When switching between the **Rx TEST** mode, the **Tx TEST** mode and the **Dx TEST** no changes take place to the set-up of the Service Monitor or to the state of the output signals and measurement functions.

The **DUPLEX TEST** screen, accessed by pressing the [Dx TEST] key, allows the results of both receiver and transmitter tests to be seen simultaneously. Primary parameters of receiver testing and

transmitter testing can be set from this screen. Transmitter distortion results and oscilloscope displays are not shown when in this mode.

Spectrum analyzer mode

The spectrum analyzer mode of the Communications Service Monitor 2947 is accessed by pressing the [SPEC ANA] key. It configures the internal circuits to provide a display which shows signal strength against frequency. The RF input signal is applied to the Y axis of the display, while the Service Monitor receiver circuits are repeatedly swept over the required frequency range, in step with the X axis of the display.

Tracking generator

With the tracking generator function active, the output of the Service Monitor RF generator is made to sweep in synchronisation with the RF input tuning. This allows the response of filters and other frequency dependent circuits to be viewed. The tracking generator is activated from the spectrum analyzer display.

Look and listen

The look and listen mode of the spectrum analyzer allows the signal tuned to the centre frequency of the display to be demodulated and fed to the internal loudspeaker or to the accessory socket. The LOOK AND LISTEN mode is activated from the spectrum analyzer display.

AF testing

The AF test mode allows the AF generators and the AF measuring circuits to be used for active testing of audio circuits.

The parameters for AF testing are set up using the **AF TEST** screen, accessed by pressing the [AF TEST] key.

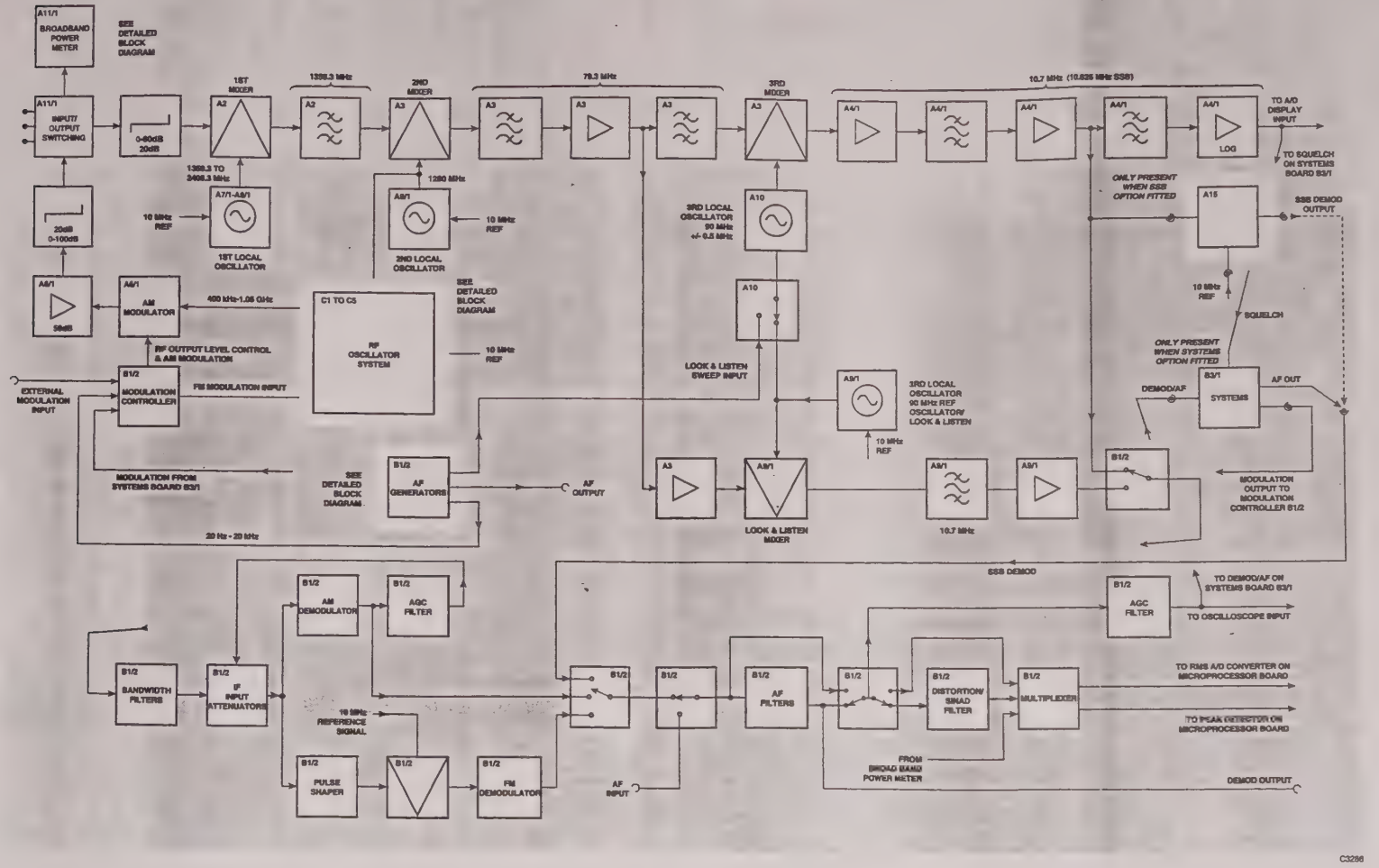

Fig. 1-1 Simplified block diagram of RF and audio circuits

Detailed technical descriptions

A block diagram showing the RF circuits and the audio processing circuits of the Service Monitor is shown in Fig. 1-1. Detailed block diagrams are included in the technical descriptions where necessary.

A2 Input mixer (44829/922)

This board has two primary functions. These are a 0/20 dB switched gain amplifier and the first frequency changing mixer.

The switched gain amplifier section contains a low pass input filter with input overload protection, a switchable 0 or 20 dB preamplifier and its associated gain switching circuit.

The frequency changing mixer comprises of a 1100 MHZ low pass input filter, the 1st mixer, which translates the input signal frequency range of 10 to 1050 MHz to the 1st IF frequency of 1359.3 MHz, and a 2 GHz lowpass output filter.

Switch gain amplifier

Input signals to the Service Monitor are routed to this board through the input switching board A11/1 and the two stage input attenuator A21. The signal is fed to panel capacitor C1 through the tray wall, using a co-axial connector. D12 and D13 provide input protection for the receiver. The printed inductor L20 with the capacitance of D12 and D13 form a low pass filter which improves the input return loss presented by the diodes which are inherently capacitive.

The preamplifier IC1 has a typical gain of 21 dB. The appropriate signal route is defined by the diode switches formed by D2, D3, D4 and D5, which are controlled by the switching signal on PLA/4 and the driver circuit around TR1 to TR4. D3, D4 and D5 are all biased relatively hard on when selected, but D2 is not driven fully. This is because D2 provides a PIN resistance which improves the input return loss of IC1 when the amplifier is in circuit. The insertion loss of the bypass route, through D3 and D4, is approximately 0.5 dB.

The biasing networks (an example of which is L15, R23, R3 and L14) provide good signal blocking characteristics to 1.5 GHz. In the above example, L14 provides high frequency blocking whilst L15 provides low frequency blocking. R23 dampens the resonance between the shunt capacitance of L15 and the series inductance of L14.

Input low pass filter and mixer

The mixer input filter is composed of surface mounted capacitors and printed inductors. It has a -3 dB frequency of 1100 MHz and a passband insertion loss of approximately 0.5 dB.

IC2 is a double balanced mixer with an insertion loss of approximately 9 dB. It is driven by a +7 dBm local oscillator signal generated on A8/1. The mixer output, which is the 1st I.F signal of 1359.3 MHz, goes through a 3 dB pad R10, R11 and R12, followed by a 2 GHz printed filter which rejects unwanted mixer products. It is then routed to board A3, which contains the 2nd and 3rd frequency changing mixers.

A3 2nd & 3rd mixer (44829/923)

A3 contains the 2nd and 3rd mixers which translate the 1st IF of 1359.3 MHz to 79.3 MHz and then to the final IF of 10.7 MHz. It also provides a buffered version of the 2nd IF which is routed to A9/1 and then B1/2 for demodulation in Look and Listen mode.

The first IF signal of 1359.3 MHz from A2 is initially filtered by a lowpass filter comprising of printed inductors L11, L12, L13, C38, C39, and a dielectric bandpass filter FL1. It is then applied to double balanced mixer IC1. This mixer converts the 1st IF to the 2nd IF of 79.3 MHz. It is driven by a +7 dBm, 1280 MHz local oscillator signal, generated on A9 and fed to the mixer through C23. The 2nd mixer adds an insertion loss of approximately 8 dB to the signal path. The 2nd IF signal is extracted by the 79.3 MHz bandpass filter L2, L3, L4, C2, C3, C45, C46, C47, C48, R6 and R7. The output from the filter is amplified by TR1, TR2 and TR3.

79.3 MHz 2nd IF

The bandpass filter has three notches in the stopband. The filter centre frequency is at 79.3 MHz with notches at 73.95 MHz, 84.65 MHz and 100.7 MHz. The notch at 84.65 MHz rejects the out of band signal that would be converted to 5.35 MHz by the 3rd mixer. A signal at 5.35 MHz is undesirable as any subsequent non-linearity in the IF strip would then generate a 10.7 MHz 2nd harmonic, which is the final IF frequency and would be detected. The notch at 100.7 MHz rejects the 3rd mixer image frequency. The notch at 73.95 MHz is inserted to be at an equal offset from 79.3 MHz as 84.65 MHz to make the filter symmetrical. After filtering and amplifying the signal goes to the input of 3rd mixer IC2.

3rd Mixer

The 3rd mixer is driven by a 90 MHz, 0 dBm signal, generated on A10 and fed to the mixer through C16. The mixer operating point is set by R15, and the mixer bias voltage is set up by Zener diode D2. R17 sets the gain of the mixer, which is approximately +26 dB. The 10.7 MHz output is an open collector which is tuned by L7 and C17 with a bandwidth of approximately 3.5 MHz. The ouput signal is passed through C19 and buffered by the common emitter amplifier TR4, to a level of approximately -2 dBm. From board A3 it is routed through PLD to the 3rd IF amplifier on board A4/1.

2nd IF path to A9/1

A feed from the second IF amplifier provides a 79.3 MHz signal which is used when operating in the Look and Listen mode. This is down-converted on board A9/1 and demodulated on board B2/1.

The signal path consists of the 79.3 MHz isolating amplifier and an isolation gate. The amplifier, based around TR5 and TR6, is a cascode arrangement, used to improve the reverse isolation. The amplifier gain is approximately 9 dB. The TR7 stage buffers the resultant signal.

The isolating gate, consisting of D3, D4, D5 and associated components, only allows the IF signal to pass when in Look and Listen mode. Failure to do so results in a spurious 10.7 MHz signal on the spectrum analyser display. When in any mode other than Look and Listen, there is a 5V DC voltage on PLC, This voltage level switches IC3(a) and (b) outputs to 0V and +12V respectively, which closes the diode gate, preventing the IF signal from reaching PLA. When in Look and Listen mode, the 5V DC voltage on PLC is replaced by a 5V square wave. This is integrated by R46 and C55, resulting in a reduced voltage at the inputs of IC3(a) and IC3(b) which changes their output voltages to 12V and 0V. Hence, IC3 opens the diode gate and allows the signal to pass to A9/1. The output signal has a level of approximately -30 dBm. The gate has approximately 60 dB isolation.

A4/1 10.7 MHz IF & log amp (44830/103)

This board contains the switched IF bandwidth filtering and logarithmic amplifier for the spectrum analyzer, and a buffer feeding the 10.7 MHz IF to the demodulator on the Audio Processor board, BI. The IF filters are composed of a 3 MHz L/C filter, a 300 kHz ceramic filter and a four stage crystal filter providing 30 kHz, 3 kHz, and 300 Hz bandwidths.

Fig. 1-2 shows the three signal paths of the filtering options in simplified block form.

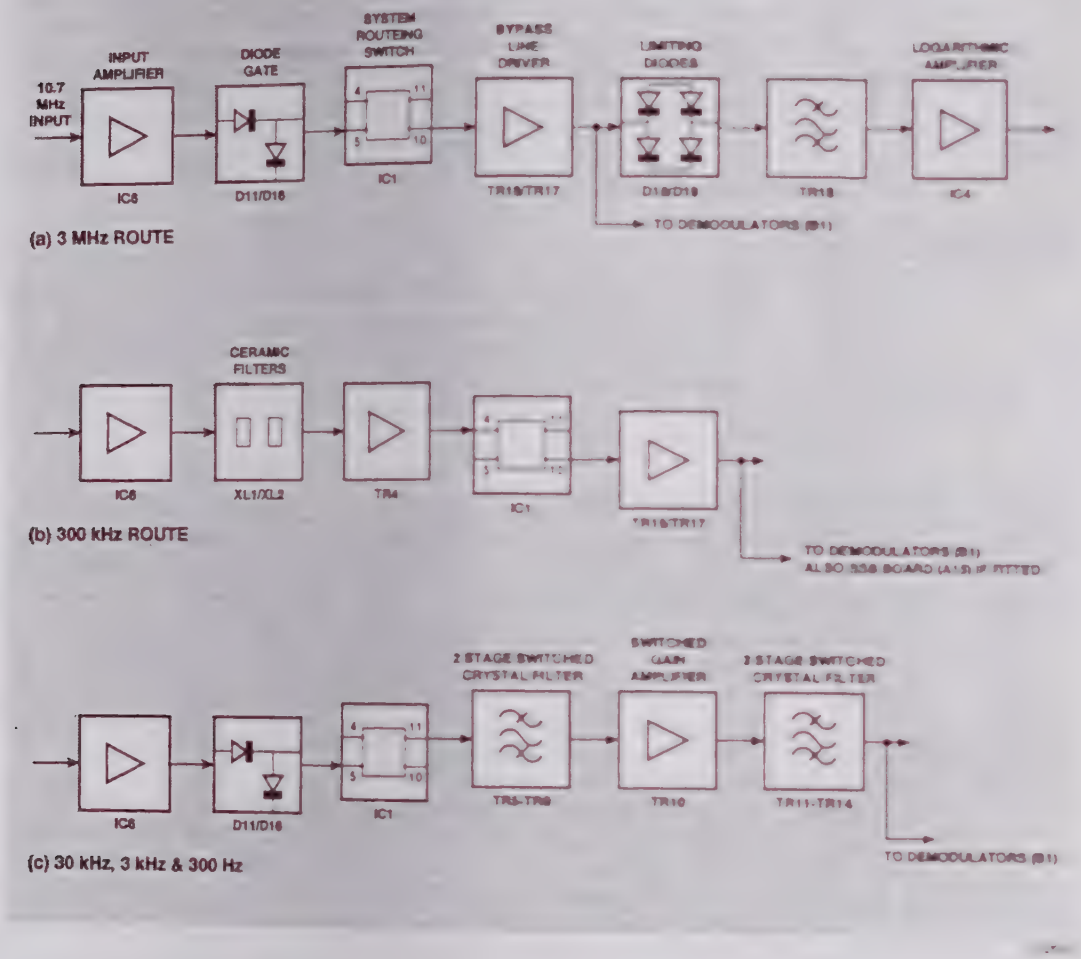

Fig. 1-2 Signal routeing for alternative bandwidth filters

Input amplifier.

The 10.7 MHz IF signal from A3 enters the board through connector PL4. The signal level is -2 dBm, measured using a low loss probe.

L27 is the third element in a three pole L/C 'T' filter. The inductor and capacitor which are the first and second elements are located on A3. The purpose of the 'T' filter is twofold. Firstly, it restricts HF content from the 3rd mixer, which would otherwise be detected by the logarithmic amplifier. Secondly, it removes the capacitive loading of the coaxial lead connecting A3 to A4.1 by incorporating the stray capacitance in the the filter design.

IC6 is a current feedback amplifier which has excellent intermodulation distortion performance and is configured to have a nominal gain of 13 dB. R4 provides adjustment to cater for IF strip gain variations.

3 MHz filter routeing.

From IC6, the signal passes through the diode gate consisting of D11 and D16 to pin 5 of the FET switch IC1. A portion of the signal is fed forward by R130 and R131 to the FET gate (pin 6) to aid linearity. This feedforward technique is applied on all signal inputs to IC1. The substrate of IC1 is biassed at -4V by D17 and R12 to further improve its linearity. From IC1 pin 10, the signal passes

to the bypass line driver circuit, consisting of TR16 and TR17. This is a complementary emitter follower circuit which is capable of driving the long capacitive track to the log amp. L2, C128 and C129 form a notch filter to reject 90 MHz 3rd LO breakthrough from A3. From the line driver, the signal passes through the D12 diode switch to the diode limiting gate of D18 and D19. This circuit limits the input to the log amp to a maximum level of +14 dBm. This is required as levels above this cause the log amp output to crowbar. In this crowbarred state, the output does not represent the true IF level and the receiver level autoranging can fail. The signal then passes through the final bandpass filter based around TR18, before entering the log amp inputs. The bandpass filter has a -3 dB bandwidth of approximately 3.5 MHz.

300 kHz filter routeing.

From IC6, the signal passes through the ceramic filter consisting of the matched pair XL1 and XL2. These provide a relatively rectangular frequency response. Matching to the filter is performed by R7 and R17. The common emitter stage, based around TR4 recovers the gain lost through the filter. The signal enters the FET switch on pin 4 and leaves on pin 10. It then passes to the log amp through the TR16, TR17 line driver, D18, D19 limiter, and the TR18 bandpass filter in the same way as for the 3 MHz routeing.

30 kHz, 3 kHz and 300 Hz filter routeing.

From IC6, the signal passes through the D11, D16 diode gate to IC1 pin 5, as for the 3 MHz routeing. However, the signal leaves IC1 on pin 11. It then enters the first of four similar crystal filter sections. Each section represents one pole of what is a cascaded four pole arrangement.

The operation of all sections is similar and will only be described for the first section based around XL3. TR5 forms an input buffer. The resonant tank circuit of L4 and C21 modifies the centre frequency of the filter to null the effect of stray board reactance thereby allowing the crystal response to be centred around 10.7 MHz.. The shunt resistors R32, R33 and R34 alter the Q of the tank circuit to achieve the three desired bandwidths (R32 for 30 kHz, R33 for 3 kHz and R34 for 300 Hz). R33 and R34 are switched into circuit as required by D1, D2 and associated biassing components. However, when the tank circuit is shunted by the low value of R34 (300 Hz filter selected), its tuning effect is diminished. Therefore C17 is used to tune the 300 Hz filter centre frequency. Additionally, the stray parallel capacitance of the crystal creates an unwanted notch in the filter response. The effect of this stray capacitance is nulled by feeding a portion of the input signal across the crystal in anti-phase, to cancel that fed forward by the stray capacitance. This is achieved by the stage based around TR6. R31 is used to accurately position the notch to give an overall symmetrical filter shape.

The signal then passes through the 2nd crystal filter stage.

Inter-stage amplifier

Between the 2nd and 3rd crystal filter stages is the interstage amplifier, based around TR10.

The gain of this amplifier is set by the bandwith selection lines. The gain required from this amplifier is related to the selected bandwidth, due to the different levels of attenuation produced by the shunt resistors switched across the crystal filter tank circuits. Appropriate emitter shunt resistors are switched in or out of circuit by the bandwidth control lines.

The signal then passes through the third and fourth crystal filter stages to the output buffer based around TR15, through the D13 diode gate, the D18, D19 diode limiter and the TR18 bandpass filter to the log amp.

Output buffer to demodulators and SSB board

The TR20 emitter follower stage provides an attenuated and buffered version of the final IF for routeing to the B1/2 demodulators and the SSB board A15. When connected to their relevent loads, the signal levels on PLB and PLE are 10 dB less than that on TP8.

Log. amplifier

The gain of the amplifier is arranged to follow a logarithmic law, which produces an output which is logarithmically proportional to the input level.

This DC output provides the signal level information required for the spectrum analyzer.

The logarithmic amplifier IC4, is a complete monolithic device, using a 9 stage successive detection technique. Input signals from TR28 are applied to pin 16, and the detected output appears at pin 6. A DC amplifier, formed by IC5(a), processes this output.

The gain of the DC amplifier is controlled by R122, and R119 adjusts the amplifier offset. These enable the output to be optimised to match the display. IC5(b) inverts the signal to the polarity required for the display, and the output at pin 7 is routed, through PLC, to board B2/1.

Power supply filtering.

The +12V and -12V supplies for boards A8/1, A9/1 and A10 are provided from the board through PLF. Additional filtering is provided to these supplies by L28, C155, and L29, C156 respectively.

Selecting and routeing

The routeing of signals through the filters, and the bandwidths of the switchable filters is controlled by the state of the four logic lines from the microprocessor board B2/1. These lines enter this board, A4/1, on PLD, pins 5, 6, 7 and 8.

The logic states of each line for all filtering options is shown in the bandwidth selection table on sheet 1 of the A4/1 circuit diagram.

A6/1 Output amplifier (44829/925)

This board produces the RF output signal for feeding to the output attenuators. The 100 kHz to 1050 MHz signal from the RF oscillator system is amplified by up to 50 dB. Fine attenuation control and amplitude modulation is applied on this board.

RF signal path

The input signal from the RF oscillator system is fed to a 230 MHz notch filter comprising of C1, R1, C14 and L12, then to the 1 GHz low-pass filter L1, L2, L3, L4, C2 and C3. The first filter flattens the frequency response of the amplifier and the second removes signal energy above 1050 MHz.

A pin diode attenuator comprising of the four diodes D1 to D4 is used to apply all control of the signal level. The control signal is produced in the the automatic level and amplitude modulation control loop. It contains three control elements. The automatic levelling voltage, the fine attenuation control voltage, and the amplitude modulation signal, if applicable. The circuits producing the control signal are explained later in this description.

The signal level at the input to the pin attenuator is in the order of -15 dBm. The maximum control voltage of 7 V at test point TP2 will result in zero attenuation, while a reduction to 0 V will cause the attenuation to increase to its maximum of 30 dB. The biasing current path for the PIN diodes is through R6 and then R2 or R3. The inductors L10 and L11 prevent RF signals from being shunted by the control voltage circuit.

From the PIN attenuator, the signal passes through a 400 kHz high-pass filter. This limits the gain of the amplifier to unity at frequencies below 250 kHz. Without this filter, the control loop feedback path could produce oscillation.

Two stages of signal amplification is provided by monolithic amplifiers IC1 and IC2. The components associated with IC1 fix the gain of this stage at 20 dB, while that of IC2 is 13 dB.

The final drive to the output attenuators is provided by IC3 which is configured to have a gain of 12 dB.

The output impedance of this amplifier is reduced to approximately 1 õ by the action of the automatic level loop, therefore 50 õ resistor R5 is included to provide the correct impedance matching to the output attenuators.

Protection against reverse power in excess of approximately 250 mW at the junction of C26/R5, is provided by the circuit containing diodes D5(a), D5(b), D6 and D7.

Level control loop and amplitude modulation

The level control loop signal is also obtained from this point. After passing through current limiting resistor R16, the RF signal is rectified by detector diode D9. A DC voltage proportional to the output of IC3 is developed across C35. IC5 is configured as a unity gain amplifier, with D8 in its feedback path. This diode and D9 are a matched pair, providing temperature compensation.

The combined amplitude modulation and fine level setting signal enters the board on PLB, then passes through the input resistor R21 to the non inverting input of IC4.

The level control loop signal is fed to the inverting input of IC4, which produces a composite control and modulation signal. combines this with the control loop signal with AF amplitude modulation signal and the variable level control signal.

The composite control signal from the output of IC4 passes to the PIN diodes through R6 and L19. Shorting link PLC can be removed to break the control loop, for test and servicing.

A7/1 1st local oscillator control (44830/111)

1st LO control

This board forms part of a single loop fractional N synthesizer. When used with the 1st LO board, a signal is generated which covers the frequency range 1.359 - 2.409 GHz. The synthesizer is used as the receiver local oscillator.

Conventional frequency dividers allow only integer division ratios. The principle of the fractional N technique is this:-

- Dividing by N for some of the time and then dividing by N + 1 for the rest of the time, results in an average division ratio which is not necessarily an integer. However fractional N goes further than this, by switching through several different division ratios, according to a complex algorithm. The result of this is an average fractional division ratio as above, but with reduced fractional N sideband levels.

For more detail see UK patent number 2140232B frequency synthesizers.

Divider chain

The 1359 - 2409 MHz signal from the 1st LO board feeds into buffer IC6. This then feeds IC5 a divide by 2 prescaler which feeds programmable divider IC3 through buffer amp IC4. The output of IC3 is amplified to TTL levels by TR1-3 IC1b and IC2 forms the function of a frequency doubler, converting edges from IC3 into pulses at the output. The output from this combination is buffered by IC1a and goes to PLB and forms the 5.0 MHz drive for the phase detector on the 1st LO board. IC1b provides an output to drive the fractional N controller IC7.

Fractional N controller

This device obtains information from the microprocessor board, converts it to control the programmable divider and consequently the division ratio. Multiplexed address and data is received at PLA 8-15. Address decoding is performed by IC8 in conjunction with line AL in PLA7. The write command on pin 16 enters the board on PLA6.

A8/1 1st local oscillator (44830/112)

Overview:

This board, in conjunction with the 1st local oscillator controller A7/1, produces the 1st local oscillator signal for the receiver section of the Service Monitor. The signal is in the range 1359.3 MHz to 2409.3 MHz at a nominal level of +7 dBm.

The components forming the VCO are on a daughter board AA1. The main board features the following sections:-

- Output buffering and amplification to drive the receiver 1st mixer and the dividers on A7.
- An amplifier and divider for the 10 MHz reference
- A digital phase / frequency detector
- The phase lock loop filter
- The loop gain shaping network
- Power supply conditioning.

Detail description

Power supply conditioning

IC1 regulates the 35 V rail to +30 V for IC12.

IC2 regulates the -12 V rail down to -5 V, for IC11 and IC12

The +12 V, +5 V and -12 V rails are smoothed (but not regulated) by TR1, TR2 and TR3 respectively. The current gain of these transistors allows higher values of series resistor to be used, thereby reducing the size of capacitors needed.

R55 in the +12 V smoothing circuit reduces the voltage drop across TR1, causing it to operate close to (but not in) saturation.

Reference amplifier, division and phase detector

The 10 MHz, +5 dBm reference signal from the microprocessor board B2U1 is amplified by TR4 to CMOS levels. The amplified signal is applied to flip-flop IC5a, which toggles its output on each positive edge at its input to produce a 5 MHz signal.

Short positive pulses are produced by R23 and C13 together with IC6a, from the square wave generated by IC5a. This drives IC8a at one side of the phase / frequency detector

Pulses from the frequency divider on A7 1 are applied to IC7a at the other side of the phase / frequency detector. The phase / frequency detector is completed by NAND gates IC9a, b, c and d.

Short pulses are used to drive the detector so that current spikes caused by the inactive edges do not interfere with the highly linear operation that is necessary in a fractional N loop.

Loop gain control and shaping network

The outputs of the phase / frequency detector are fed to the control inputs of CMOS switch IC11. This is wired so that the loop filter is connected alternately to a positive voltage on C17 and an equal value negative voltage on C18. In this way, control of the loop gain is accomplished by varying the magnitude of the voltages at C17 and C18.

The gain shaping network is based around IC10a, b and c. It is configured to vary the voltage on C17 and C18 according to the voltage on the VCO tuning line at PL.D2. This arrangement maintains the overall loop gain at an almost constant value.

Shaping is a piecewise linear approximation in three steps.

At low and medium tuning voltages, IC10b has a gain of -R12/(R10+R11), which is backed off at low tuning voltages by IC10a. This gives an overall gain of -(R12/R10+R11)-R7/P6+P8) until D3 clamps IC10a output.

At higher tuning voltages, when D4 turns on, the gain of IC10b is increased to -R12/R10.

R9 providing a DC offset.

The component values used ensures that, the network has three sections each with a higher gain than the previous. IC10c inverts the signal at TP6 to provide a tracking opposite polarity voltage. The outputs of the gain shaping network are heavily filtered, to reduce to an acceptable level, the noise that would otherwise be presented to the loop.

When the loop is in lock at a steady state, the outputs of the phase / frequency detector TP11, TP12 have a 50% duty cycle, and as the magnitudes of the voltages on C17 and C18 are equal, therefore the average DC voltage applied to the loop filter is zero. A phase error at the phase / frequency detector input causes the duty cycle, and therefore the average voltage at IC11 output, to change. This causes the loop filter to apply a correcting voltage to the VCO, thereby maintaining lock.

Loop Filter

L3, L4, L5 and L6 together with C19, C20 and C21, form a low pass filter to reject fractional-N noise and 5 MHz reference breakthrough. Input impedance is 330 Ω, provided by R38. The output impedance of the filter is high. It also has a notch centred around 20 kHz. This provides rapid roll off to the loop gain outside the (approximately) 8 kHz, loop bandwidth. It also reduces residual added noise, without increacing phase shift at 8 kHz, which would cause the loop to be under-damped.

The loop integrator is based around IC12 and associated components. Poles are formed by R41 and C24 at 175 Hz and by R42 and C23 at 16 kHz. Zeroes are formed by R39 and C22 at 720 Hz and by R42 and C24 at 1.6 kHz. As such, the integrator is 2nd order from around 200-700 Hz. This helps to provide more loop gain at frequencies below 700 Hz than would be possible with a simpler 1st order integrator. Another important advantage of this arrangement is that op-amp (and input resistor) noise is reduced above a few hundred Hz by potential divider action of R41 and R42, thereby allowing reasonable impedance in the preceding filter.

Out of lock detector

During normal (locked) operation of the loop, the signals on IC7a pin 6, and IC8a pin 8, are low with narrow positive going pulses. Therefore C14 is discharged, TR5 is off, TR6 is on, and TR7 is off. When the loop goes out of lock, one or other of these signals will have an average duty cycle of 50%, which charges C14 and turns on TR5. This in turn enables the astable multivibrator built around IC6c and IC6d. The astable has two purposes. LED D2 flashes as a fault finding aid and it prevents the loop from getting "stuck" at one end. During the periods when IC6d output is low, IC8a is reset so TP12 is high and TP11 is low. This causes the loop integrator output (TP17) to ramp high. In this state however, TR6 if off and TR7 on. This clamps the integrator output voltage through D1, forcing the VCO to approximately the centre of its range. During the periods when IC6d output is high, normal loop action is restored and the VCO sweeps up or down to the desired frequency.

Output amplifiers

IC13 buffers and amplifies the VCO output before it is split off to output amplifiers IC14 and IC15. IC14 feeds the signal to the 1st mixer in the receiver, IC15 feeds the divider board A7/1. These amplifiers are driven into compression to help reduce any variations in output power which could be present due to frequency and temperature.

AA1 Voltage controlled oscillator (41830/160)

Operation:

This VCO is in the form of a daughter board which is mounted on the voltage controlled oscillator board A8/1. It generates a signal between 1.28 GHz and 2.41 GHz for tuning voltages of approx 5 V to 24 V. The oscillator is designed to havelow phase noise for the range covered. The actual range of operation possible at room temperature is approx 1 GHz to 2.5 GHz.

TR1 generates a negative resistance at its emitter. A resonator formed by D1, D2, C5 and a printed stub is connected to the emitter. Bias is set by R1, R2 and R3. The VCO can be turned off by pulling the ENABLE line low.

R4 presents optimum collector load to TR1 for operation over the required range. R5, R6 and R7 form an attenuator pad to reduce the effects of impedance changes on the VCO output.

A9/1 2nd & 3rd local oscillator (44830/097)

This board contains the following:-

- A phase locked loop oscillator to produce a fixed 1280 MHz signal, used as the Service Monitor receiver 2nd local oscillator and as a reference signal for the signal generator section.
- A phase locked loop oscillator to produce a fixed 90 MHz signal, used as the receiver 3rd local oscillator.
- The 3rd mixer and IF stages for the listen IF path.

1280 MHz local oscillator

The complete 2nd local oscillator is composed of the voltage controlled oscillator built around TR1, and its associated phase locked loop. The voltage controlled oscillator free runs at about 1280 MHz. Its output is taken through C14 to buffer amplifier IC3. The output from IC3 is fed to a 2nd buffer IC4. A portion of the output from IC3 is applied to IC6, a low noise divider, through R10. This divider is capable of variable division ratios but here is configured to divide by a fixed ratio of 128, therefore the signal at the output of the divider (pin 21) is at 10 MHz when the loop is locked. The ECL output is converted to TTL levels by TR2 and applied to one input of the phase/frequency detector IC7 and IC8. The 10 MHz reference clock signal, from the TTL interface circuit, is applied to its other input. The resulting error signal is filtered by IC9 and associated components and applied as a correction signal, through R30, to the voltage controlled oscillator. Shorting link PLK is provided to open the loop to aid fault finding.

The 1280 MHz signal amplified and buffered by IC4, is then branched through two paths. The path through the 3 dB pad R15, R16 and R17 is routed to the 2nd mixer on A3. The path through IC5 is routed to the signal generator system.

90 MHz local oscillator

The 3rd local oscillator is a phase locked loop composed of TR8, IC11, IC12, IC13, IC14 and associated components. TR8 forms a 90 MHz voltage controlled oscillator buffered by TR9. The 90 MHz signal is further buffered and split 3 ways by TR10, TR11 and TR12. The path through TR12 drives IC11, a divider configured to divide by 9. Its output at pin 15 is level shifted to TTL by TR13 and applied to one input of the phase frequency detector IC12 and IC13. The 10 MHz reference, from the TTL interface, is applied to the other input of the phase/frequency detector. The error signal is filtered by IC14 and associated components before being fed back to the voltage controlled oscillator through R55. Shorting link PLM is provided to open the loop for fault finding.

The 90 MHz signal is buffered by TR11 and feedthrough PLD to the Service Monitor receiver 3rd mixer on A3.

Listen IF path

A 79.3 MHz, 2nd IF signal from A3 is fed to this board through PLB and then to buffer TR3. The output from this buffer is applied to one input of mixer IC10. A 90 MHz signal from TR10 is applied to another input of IC10. The oscillator function of this IC is not used.

The mixed output is then passed through the IF amplifier and 10.7 MHz bandpass filter TR4, XL1(a), XL(b) and TR5, which has a bandwidth of 15 kHz. The IF signal is then amplified by TR6 and TR7, then routed to board B1/2 for further amplification and demodulation.

D3, D4 and IC14b allow the 15 filter to be bypassed using the control line on PLA7. When bypassed, the signal is routedthrough D3, instead of through the filter. This path results in a wideband IF output from PLC which can be switched in or out as required.

A10 90 MHz swept local oscillator (44829/930)

This board contains the local oscillator for the 3rd mixer in the Service Monitor receiver circuits. In all operating modes other than 'Look and Listen' it provides a 90 MHz signal which is mixed with the 2nd IF of 79.3 MHz to produce the 3rd IF signal of 10.7 MHz.

When the 'Look and Listen' mode is being used, this oscillator is swept about 90 MHz to provide the display sweep. During the sweep flyback, it is phase locked to 90 MHz so that the sweep frequency will remain centred around 90 MHz.

Locked mode

Varactor controlled oscillator

TR1 is configured as a varactor controlled oscillator with positive feedback from its emitter to base. The oscillator is tuned by the combination of preset inductor L1, with capacitive elements C3, C4, C3, C36 and varactor diode D1. The voltage required across D1 to produce an output frequency of 90 MHz is approximately –5.3 V. Under locked conditions this is made up of the DC base bias on TR1 of approximately –0.3 V, and a control voltage from the phase detector of 5 V. The oscillator output is taken from the split emitter load which provides an output signal of approximately 40 mV

Output amplifier

The output from the oscillator to the 3rd mixer is buffered by TR2, with the drive provided from the emitter follower TR3. The signal level at PLC has a nominal level of –5 dBm.

A signal taken from the emitter of TR2, and buffered by TR4, provides the signal for the phase detector.

Phase detector

IC2 is a Gilbert cell mixer which produces two anti-phase output signals at the difference frequency between the LO input, pin 5, and the input to INA, pin 13. Each of these inputs is obtained from identical buffer circuits built around TR4 and TR5, which provide 6 dB gain. The input through TR4 to the LO input is from the oscillator output as described above, while the signal from TR5 to INA is from the 90 MHz reference oscillator on A9/1. This signal enters the board through PLB at a level of –10 dBm.

The anti-phase outputs from A, pin 3, and B, pin 14, are fed into IC1(b), which integrates them to provide a single ended output at the difference frequency. When the oscillator is locked, the phase detector output will be a steady DC voltage which biases the varactor diode. A frequency difference will result in a variation in the phase detector output which will correct the frequency.

The output voltage level from the A and B outputs of IC2 is set by the values of R26.

A single pole loop filter, R39, R40 and C29, provides a capture range of ±500 kHz.

Swept mode

When operating in the swept mode, the frequency of the oscillator is shifted by up to ±500 kHz about the centre frequency of 90 MHz, by the sweep signal from audio processor board B1/2. In order to maintain the centre frequency at 90 MHz, the oscillator is locked by the phase detector during the sweep flyback period.

Centre frequency locking

During the sweep flyback period, the SWEEP CONTROL line from board A9/1 through PLJ, pin 6, is high. This closes IC3(d) which also closes IC3(a), allowing the control voltage from the phase detector to lock the oscillator to 90 MHz. The control voltage charges C30. The sweep signal is held at 0 V during the flyback period, therefore the voltage applied to the varactor diode comprises of the control voltage from the phase detector and the bias voltage of TR1.

At the end of the flyback period, the SWEEP CONTROL line goes low, opening IC3(d) and IC3(a). The charge across C30 maintains the voltage across D1. The sweep signal from the audio processor board, B1/2 through PLE, pin 3, is inverted by IC1(a), then fed to potential divider R6 and R7, before being applied to the anode of the varactor diode. As C30 is in series with D1, the sweep signal will be algebraically added to the loop control voltage. This will result in a negative frequency offset at the start of the sweep and a positive frequency offset at the end, while the centre of the sweep remains at the tuned frequency. The sweep signal from PLE can be monitored on test point TP1. A negative voltage on TP1 produces a negative frequency offset, a positive voltage produces a positive frequency offset. The sweep sensitivity is typically 200 kHz/V.

Setting L1

L1 is pre-adjusted so that the centre of the voltage controlled oscillator capture range is 90 MHz. When the frequency is locked at 90 MHz the voltage on test point TP3 is typically 4.5 V.

A11/1 Input switch and power meter (44830-163)

RF routeing

The RF connectors on the front of the Service Monitor can be can be configured to the following combinations by repeated presses of the [SELECT] key.

Antenna in	-	BNC out
Antenna in	-	N type out
N type in	-	N type out
N type in	-	BNC out

When the N type connector is selected for simple port duplex operation, a signal path exists from the RF generator switched attenuator A20, through switched attenuator RLE/RLF to the power splitter, then through switched attenuator RLG/RLH to the Service Monitor receiver switched attenuator. This path is used for the Service Monitor self-tests, and can also be used for functional checks to the instrument.

Antenna input

When the antenna socket is selected, signals from the transmitter under test are routed to the wide band power meter contained on this board and to the Service Monitor receiver circuits. Relay RLD is energised by the N/ANT(L) line from the microprocessor board B2/1, through PLA, pin 10 being made low.

The signal for the wide-band power meter which is described later, is obtained from the potential divider R68, R69.

The signal to the receiver circuits is routed though the 0-10 dB switched attenuator RLG/RLH to the 2 stage switched attenuator A21, then to the input amplifier and 1st mixer board, A2.

The 50 Ω termination consisting of R78 and R79 is switched into circuit by RLC, to load the R110, R112 junction of the power splitter.

N type input

The N type connector can be selected as the input port, output port, or for duplex input-output working. A 20 dB power load, with a power handling capacity of up to 150 W, is permanently connected between this connector and the input connection to this board A11/1. A 6 dB power splitter, R110, R111 and R112, is used between the N type connector, the generator output and the receiver input.

When the N type connector is used as the input to the Service Monitor, relays RLC andRLD are de-energised by the N/ANT(L) line from the microprocessor board B2/1, through PLA, pin 11 being made high.

The signal is routed from the power splitter, through RLC, contacts 11 and 14, and RLD contacts 11 and 14, to the wide band power meter and Service Monitor receiver circuits.

N type output

When the N type connector is used as the output for the signal generator, relays RLA and RLB are de-energised by the N/BNC(L) line from the microprocessor board B2/1, through PLA, pin 10 being made high.

The signal is routed from the 3 stage switched attenuator A20 to this board, then through 0-10 dB switched attenuator RLE/RLF. The signal passes through RLA, contact 11 and contact 14, then RLB contact 11 and contact 14, to the power splitter. The generated signal will be present at the

junction of R111 and R112, from where it passes off the board to the 20 dB power load and the N type connector.

BNC output

When the BNC connector is selected as the output for the signal generator, relays RLA and RLB are energised by the N/BNC(L) line from the microprocessor board B2/1, through PLA, pin 11 being made low.

The signal is routed as above (N type output), to contact 11 of RLA, then to contact 8 and off the board to the BNC connector.

The 50 Ω termination consisting of R75 and R76 is switched into circuit by RLB, to load the R110, R111 junction of the power splitter

Power meter

The signal for the power meter, obtained from the potential divider R68, R69, is fed through isolating capacitor C1 to the overload protection circuit built around D7. Signals in excess of ±5 V are clipped.

The wide band power measurement is not made directly on the input signal, but on a 25 kHz signal generated within the power meter, which is level controlled to match the incoming RF signal.

Detectors and integrator

The signal from the limiter circuit is fed to RF detector diode D10(b), which with the associated components C7, C9 and R25, form a peak detector circuit. This produces a DC voltage, proportional to the RF signal level.

An identical detector is built around D10(a). This produces a DC voltage from the AGC loop, low frequency signal described later. D10(a) and (b) are in a single package.

The voltages from the two detectors are fed to the integrator circuit built around IC1. This IC is a chopper-stabilised op-amp with extremely low input offset. The control voltage produced by IC1 is direct-coupled to IC2 which provides a level off-set, so that the control voltage at TP2 is within the range −11.9 to −10.8 V.

AGC amplifier

The AGC amplifier consists of two cascaded longtail pairs IC3 and IC4, which is powered from the +5 V supply and the −12 V supply. The gain of each IC is controlled by the voltage on pin 6, which in this circuit is the AGC control voltage.

The input to the AGC amplifier is a 25 kHz, signal obtained from reference signal dividers on the audio processor board, B1/2. This is routed through the microprocessor board B2/1, and has a level of 1 V RMS. The level of this signal is attenuated to 2 mV RMS by R40 and R41, then applied to the input of IC3.

When the AGC control voltage at TP2 is −11.9 V, the current through both IC3 and IC4 is zero, the amplifier gain is at a minimum and the input to the AGC LF detector is zero.

When the AGC control voltage at TP2 is −10.8 V, the current through both IC3 and IC4 is 0.6 mA, the amplifier gain is at maximum and the input to the AGC LF detector exceeds 1 V RMS.

Zener D9 limits amplifier current and prevents saturation of IC3 and IC4.

25 kHz processing

The anti-phase outputs from IC4 are combined in IC2(d) to give a single ended output.

This is applied to attenuator R60 and R61, which precede the 25 kHz band pass filter IC2(b). The overall gain is unity at 25 kHz, from IC2(d) output to IC2(b) output. The action of the AGC circuit results in a 25 kHz signal being produced at the output of IC2(b) output, which is directly proportional to the RF input signal level. The 25 kHz signal is amplified in IC2(a) which has a gain of ×3. The output is routed to the audio processor board B1/2 where it is measured as the RF input level. The level of the 25 kHz signal is from 9 mV to 3 V RMS for normal RF input levels.

Overload detector

The RF generator output BNC socket and the ANTENNA BNC socket are both connected to overload detectors. The signal level at each socket is sampled by a resistor divider, R73 and R74 for the generator output; R80 and R81 for the ANTENNA input.

The sample signal is passed through full wave rectifier diodes D12, D13 or D16, D18. The output from both groups of diodes is connected in parallel across R82 and C44 to develop a DC voltage, with D20 as a protection device.

This voltage is routed to the microprocessor board B2/1, on lines OVERLOAD +VE through PLA7, and OVERLOAD -VE through PLA6. Under normal operation, running on B2/1 holds OVERLOAD +VE at a voltage below OVERLOAD -VE. In an overload condition, the rectified output from the sampling circuits forces OVERLOAD +VE to be greater than OVERLOAD -VE. This triggers a threshold detector on B2/1, causing an overload warning to be displayed. The overload threshold at the frontpanel sockets is typically +30 dBm.

A15 SSB board (44830/021)

This board is only made active when the SSB facility is selected. It produces a demodulated output from an SSB RF signal.

Operation

The final IF signal from the IF amplifier is routed to this board at pin 1 of PLA.

When SSB demodulation is selected by the user, the frequency of the 1st local oscillator is set to produce a final IF of 10.625 MHz, instead of 10.7 MHz.

With the Service Monitor input attenuators set to the correct range, the signal entering the board will have a level of between -50 and 0 dBm. This has be to levelled before demodulation.

The circuit configured around TR1 is a variable gain amplifier, with the input applied to the first gate and controlled by the voltage applied to the 2nd gate. The automatic gain control circuit which produces this control voltage is described later.

The output from TR1 is fed to the 'A' input of the mixer, IC1. A 10 MHz clock signal is fed into the mixer through the internal oscillator base. The output signal from the mixer contains a component centred around 625 kHz. This is filtered off by the low-pass circuit C7/L1/C8.

The filtered signal is then fed to the 'A' input of the second mixer, IC2, where it is mixed with a 625 kHz reference signal. The reference signal is obtained by dividing the 10 MHz clock signal by 16, using IC3(a).

The mixing action will produce zero output when no sideband signal is present, but will produce a signal when a frequency other than 625 kHz is present. This will be a true representation of the SSB modulation.

The output from IC2 is passed through a low-pass filter L2/C27, which removes the HF components, leaving only the demodulated SSB signal. This is fed through DC blocking capacitor C18 to PLA, then routed to the audio processor board B1/2.

The demodulated SSB signal is used to generate the automatic gain control voltage for TR1. After passing through DC blocking capacitor C19, the signal is rectified by IC4, D1 and D2. The long time-constant filtering of R16 and C21 acting with D1 and D2, together with the design of IC4(a) feedback circuit, produce a fast attack, slow decay, control voltage.

IC4(b) is used to invert the polarity of the control voltage and to allow a threshold level to be set. The action of the automatic gain control will produce a signal level out of TR1 which is virtually flat over the design input range.

The +5 V supply for this board is taken from the +12 V supply on PLB pin 1 through voltage stabaliser IC5. It is activated only when the SSB logic line on PLB, pin 5 is made low.

A20 3 stage attenuator (44829/891)

Repair or adjustment to this unit is not recommended, complete unit replacement being the advised repair procedure. The description which follows is included to aid fault identification.

The 3 stage switched attenuator provides stepped level control to the output from the signal generator within the Service Monitor.

It has an attenuation range of 0 dB to 100 dB in 20 dB steps, with one stage of 20 dB and two stages of 40 dB.

The RF signal from the RF amplifier board A6/1 is fed to the SMA RF input connector, to pin 11 of RLA. After passing through the selected attenuator stages, it is routed from pin 11 of RLF to the SMA RF output connection, then to the input/output switching board A11/1.

Each stage consists of a twin π network which can be included in the signal path or bypassed, according to the required value of attenuation.

The selected stages are switched in or out of circuit by latching relays, RLA to RLF, activated by a pulse of approximately 45 ms, routed from the microprocessor board B2/1. The common return for the relay coils is through L1 and PLA pin 2, to the supply produced on microprocessor board B2/1.

A21 2 stage attenuator (44829/892)

Repair or adjustment to this unit is not recommended, complete unit replacement being the advised repair procedure. The description which follows is included to aid fault identification.

The 2 stage switched attenuator provides stepped level control to the input of the receiver circuits of the Service Monitor.

It has an attenuation range of 0 dB to 60 dB in 20 dB steps, with one stage of 20 dB and one stage of 40 dB.

The RF signal from the input/output switching board A11/1 is fed to the SMA RF input connector, to pin 11 of RLA. After passing through the selected attenuator stages, it is routed from pin 11 of RLD to the SMA RF output connection, to the .First Mixer board A2.

Each stage consists of a twin p network which can be included in the signal path or bypassed, according to the required value of attenuation.

The selected stages are switched in or out of circuit by latching relays, RLA to RLD, activated by a pulse of approximately 45 ms, routed from the microprocessor board B2/1. The common return for the relay coils is through L1 and PLA pin 4, to the supply produced on microprocessor board B2/1.

B1/2 Audio processor (44830/180)

Control circuit

The Control Circuit processes data from the microprocessor through PLB to set control registers and latches which determine the audio processor function and mode of operation.

The microprocessor provides a dedicated (and therefore quiet) 8-bit data bus which sends both Data and Address information to the Audio Processor. Data is also sent back to the microprocessor over this 8-bit bus. The transmission of data is controlled by the microprocessor using 4 lines: Buffered Read, Buffered Write, Data Select and Address Select.

Control latches

Data from the microprocessor is clocked into all latches, DACs, synthesiser and counter chips on the lagging (+ve going) edge of the active Lo Buffered Write pulse.

With Address Select active Lo, data is loaded from the 8-bit bus into Address Latch IC50. Three least significant bits of the latched address, A0, A1 & A2 are routed to address ports of synthesiser chips IC1 & IC2, and counter chip IC301. Latched address bits A6 and A7 select one of address decoders IC52, IC53 & IC251, and latched address bits A3, A4 & A5 define the output from the selected address decoder. Addresses 00 to B8(Hex) are used for this purpose.

With Data Select active Lo, IC52, IC53 or IC251 output a Lo to the selected location, this activates the Enable or Chip Select port of the selected device. IC52 & IC53 decode addresses for the Synthesiser section, enabling data to be loaded into latches IC55 to IC58. IC251 decodes addresses for the Analyser section, enabling data to be loaded into latches IC252 to IC257; IC258 further decodes 2 sets of 2 lines into 2 mutually exclusive sets of 4 lines.

When Buffered Read line is active Lo the output state of the IF Counter or Option Buffer is read onto the 8-bit data bus.

AF synthesiser and modulator drive

The circuit consists of 2 independent frequency synthesisers which provide internal source for AF Out and Modulation waveforms.

The modulation control section provides drive for AM and FM (with or without pre-emphasis).

See Fig. 1-3 below.

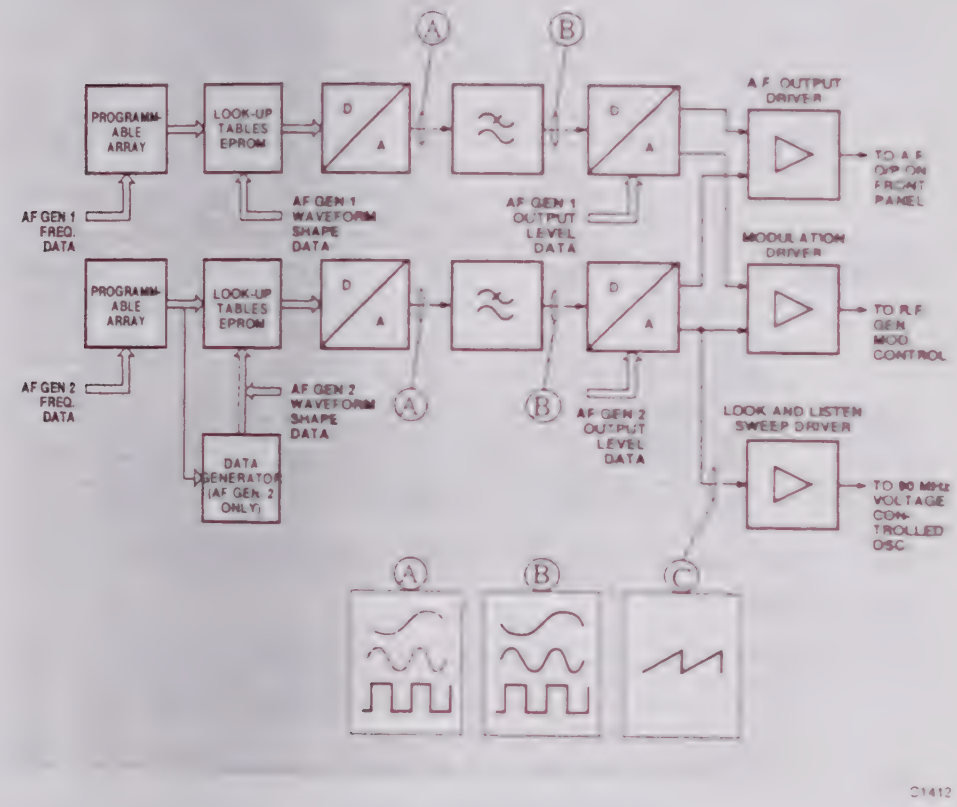

Fig. 1-3 Block diagram of audio generators

AF synthesisers

AF Gen1 and AF Gen2 are two independent frequency synthesisers consisting of Audio Oscillator gate array IC1 (IC2), EPROM IC3 (IC4), and DAC IC5 (IC6).

IC1 is a gate array customised as a 24 Bit Direct Digital Synthesiser Controller. Its function is determined by 8 registers, organised as 2 control registers and 2 banks of 3-byte frequency registers. Contents are loaded from the 8-bit data bus D0/D7 to the register addressed by 3-bit bus A0/A3 when CS1 is active Lo.

The chip is clocked by 1 MHz Clock from the reference frequency divider, the +ve edge of each clock pulse causes the 24-bit word stored in a frequency register to be added to the accumulator. The accumulator output P0/P23 is therefore a 24-bit word which increases towards full scale on each successive clock pulse, the higher the number stored in the frequency register means the shorter the time to fullscale and hence the higher the output frequency.

The 13 most significant bits P11/P23 are fed to addresses A0/A12 of 16-bit EPROM IC3, the look-up table converting to an 8-bit output word corresponding to waveform amplitude; 0 to FS input converts to one cycle of output waveform. Addresses A13/A15 access look-up tables for conversion to squarewave, sinewave, Look/listen sweep wave forms, and VOR/ILS waveforms.

The 8-bit output of EPROM IC3 is converted in multiplying DAC IC5 to an analogue voltage offset negatively with respect to ground. Amplitude is determined by Vref (TP1) which is preset by [SET AF LEVEL] R2 to 5.86 V nom.

IC12(b) is configured as an adder which inverts and shifts the output voltage positively by 2.93 V, thereby centring the output waveform about 0 V; this allows DC coupling of output, essential for low frequency sweep and square waveforms. For a sine- wave the DAC output amplitude measured at TP2 is 2.064 V RMS nom , and for a square wave 5.835 V pk to pk.

The facility for FFSK (Fast Frequency Shift Keying) is catered for by sending a Sync Interrupt to the microprocessor when output signal goes through zero phase (EPROM D7 toggles). The frequency of the next half cycle is determined by SEL A/B which selects 1 of 2 frequency registers in IC1.

AF Gen2 is essentially similar to AF Gen1. and includes sweep Look/listen waveform and Digitally Coded Squelch.

When Digitally Coded Squelch is selected the output is a coded square wave under microprocessor control. Each complete cycle of the generator chip IC2 clocks in data for EPROM addresses A12 and A13 from D-type Flip-flop IC7, at the same time an interrupt is sent to the microprocessor asking for DCS data prior to the next clock pulse. Analogue output is either zero, FS +ve, or FS - ve volts. TP3 output levels are nominally the same as TP2.

Filtering

The 3rd order active filter IC12(a) is designed with 50 kHz cut-off, and is flat to 0.05 dB up to 20 kHz. This filters out the clock frequency, and smoothes the higher frequency steps which make up AF input waveform.

AF Gen2 output can also be filtered by a 50 kHz active LP, IC11(c), or bypassed in the case of low frequency square and sweep waveforms, or filtered by a 2nd order active LP filter, IC11(b), with 140 Hz 3 dB cut-off used in the conjunction with DCS generation. Selection is by analogue switches IC18(a),(b)&(c). Any losses due to these switches are matched by R19 in AF Gen1 circuit.

Filtered level of sinewaves measured at TP4 and TP6 is 2.05 V RMS.

Audio output

The outputs from the two synthesisers are fed in parallel through two 12-bit level DAC's IC15 and IC16, and selector switch IC13 to be summed at the AF driver IC19. Levels at TP7 and TP8 are dependant on DAC settings and will be between 0.5m V (loaded data 001 HEX) and 2.00 V RMS(loaded data FA0 HEX).

The AF driver stage has a gain of ×0.2 or ×2 determined by IC13 selector, giving full scale outputs of 4 V RMS and 400 m V RMS fed through PLC/2 to Front Panel AF Out Skt.

The output from level DAC IC16 is also buffered by IC17(a) to feed the sweep waveform to the RF unit 3rd LO in Look/listen mode when selected by switch IC214(c).

Internal modulation

DAC's IC15 and IC16 output also provide internal modulation source when selected by switches IC22(d) and IC24(a).

The internal modulation is summed at IC23(c) input together with any external modulation input fed from 12-bit level DAC IC20 and selected by switch IC24(b). The summer IC23(c) has a gain of ×2 (AM mod) or ×0.354 (FM mod) as controlled by switch IC29(a).

External modulation

The external modulation may be derived from:.

(a) Rear Panel Skt. through PLK/1, protected buffer IC21(a) and selector switch IC22(a), or from.

(b) Cellular Mod I/P through PLR/2 and selector switch IC22(b).

(c) MIC I/P through IC22(c).

All these inputs require 1 V RMS nominally to give the required modulation as set by the Ext Mod Level DAC IC20. IC21(b) provides buffering and gain of ×2.05 .

Modulation level

AM Mode: Full Scale output from IC23(c) is 4 V RMS. This is routed through the Mod Correction DAC which is nominally set to 3258 dec't, giving a nominal FS output of 4.5 V pk. at PLD/7 corresponding to 100% AM. Actual level depends on AM calibration of the complete instrument.

FM Duplex Mode: Full Scale output from IC23(c) is 0.707 V RMS, the output to Duplex fractional-N 1-bit A/D at PLD/4 is restricted to 1 V pk maximum and normally 0.5 V RMS minimum. With no pre-emphasis IC24(c) & IC29(b) are closed and IC24(d) open. IC23(c) output is attenuated in MOD Correction DAC IC25 to compensate for variation of FM sensitivity with carrier frequency in the Duplex Oscillator.

The FM Attenuator DAC IC28 reduces the varactor drive by factors of 1,2,4 &8, this in conjunction with the Duplex FM Attenuator gives nominal full scale deviation ranges of 100 kHz down to 195 Hz.

Actual levels depend on FM calibration of the complete instrument.

Any combination of multi-tone modulation is possible with 25 Hz resolution provided that A/D voltage is kept within 0.5 V and 1 V pk.

750 µs pre-emphasis

The FM pre-emphasis circuit is designed to increase deviation in proportion to modulating frequency above a knee frequency of 212 Hz. Additionally the deviation at 1 kHz shall be the same with or without pre-emphasis.

IC23(a) is an inverting amplifier with DC gain = -15.6 dB, 1 kHz gain = -2.0 dB and time constant of 750 µs given by C88 × R52.

Gain in the voice band increases approximately 6 dB/octave.

IC23(b) buffers the previous stage from capacitive loading of C88.

IC23(d) is configured as a 2nd order inverting low pass filter with DC gain = +2.6 dB and cut-off frequency 10 kHz. IC23(a) and IC23(d) combine to give the desired pre-emphasis characteristic over the voice band 300 Hz to 3400 Hz, while unwanted high frequency components are attenuated.

With pre-emphasis selected IC24(c) is open and IC24(d) closed. IC29(b) is open, causing R58 and R59, together with the loading of the C1 unit, to reduce the level at PLD/4 by a factor of 4.

RF level DAC

IC27 is a 12-bit multiplying DAC which sets the RF level DC controlling voltage. This is derived from reference zener D4.

[SET RF LEVEL] R61 presets the DC level at TP14 to nominal -4.5 V through inverting summer IC26(c). Actual level depends on RF Level calibration of the complete instrument.

With AM selected by IC29(d), the output of Correction DAC IC25 is inverted by IC21(d) and AC coupled to be summed with the DC.

Maximum AC is 9.0 V pk-pk which corresponds to a notional 100% AM Depth.

RF output suppression

The circuit provides a fast response means of suppressing and enabling the RF output signal. This facility is used by some of the SYSTEM test options.

The DC level at PLD/7 can be switched negative, thereby maximising the PIN diode attenuation of A6/1 output amplifier.

The RF output control signal from the Cellular Systems board A3/1, is fed to PLR/4. When this control line is Hi, TR90 and TR91 are both biased off and zero current is summed into IC26(c). Consequently PLD/7 voltage level, and therefore the RF output level, are unaffected.

When the RF output control signal line is Lo, TR90 and TR91 are both biased on. A negative current is summed into IC26(c), forcing TP14 to approximately +1 V, and PLD/7 negative.

TR91 performs as an integrator, the collector switching rate of approximately 25 V/µs being determined by R96 and C85. This results in an RF output level transition time of approximately 100 µs.

Demodulators

The demodulator selects one of two 10.7 MHz IFs for demodulation: either the normal IF. (analyser mode), or the listen IF. (look and listen mode). Two outputs are produced: an AF demodulated signal and a CMOS level IF signal to drive the IF. counter. Demodulation can be selected from AM, FM, or FM with 750 µs de-emphasis. The demodulated output is always 50 kHz low-pass filtered.

IF Attenuators and switches

Each IF input PLF and PLG has its own PIN diode attenuator and selector switch. The circuit has a common output at a fixed low level, being the selected IF levelled by the PIN attenuators and controlled by the AGC loop.

Input impedance is 95 Ω designed to minimise loss due to loading IF drive circuits in the RF tray.

Both attenuators are driven by a common control voltage (TP127) from the AGC circuit. AGC operates over input range -60 dBm to 0 dBm with control voltage within +10 V and -2 V.

IF selector switches are driven by complementary CMOS level control lines, so that only one IF input is selected at a time. The outputs of both switches are wired together and taken to the input of video amplifier, IC100.

AM Demodulator and automatic gain control (AGC)

IC100 amplifies the selected and levelled IF. The two antiphase outputs of this amplifier are filtered by ceramic 10.7 MHz bandpass filters to reduce noise, and then used to drive the AM demodulator (IC101) and single ended input to the IF limiter (IC102).

AM demodulation is achieved by mixing the IF with level limited IF from the limiter in IC101.

The output of IC101 consists of three components: an AF component which is the required demodulated signal, a DC component which is proportional to the carrier level, and an RF component at the carrier frequency and its harmonics. The differential output from IC101 is filtered to remove the RF component, and converted to a single ended signal by IC103(b). The AF component is fed to selector switch IC109(a) as demodulated AM.

IC103b also compares the DC component with the AGC reference voltage (typically -0.5 V at TP122) preset by [SET AM LEVEL] R143. Thus IC103b DC output represents level error, and is zero when the AGC loop is operating. AGC action is determined by integrating this output error voltage, the integrated error (TP127) is fed back as a control voltage to the PIN diode attenuators. Feedback is in the negative sense such as to maintain the attenuator output level constant. IC103a is configured as the integrator which filters out all AF and RF components.

AGC sets the RF level to a predetermined value (set by R143) and consequently the amplitude of the AF component is a measure of AM modulation depth.

10.7 MHz IF conversion to logic levels

In FM operating mode IC103a integrates the difference between the output of IC103b and +5 V (logic Hi) derived from AM Demod select line.

The output from the IF limiter is of the order of 150 mV pk-pk. This is converted to CMOS levels by IC104b for both FM demodulation and IF counting. This CMOS inverter is self biased by 100% negative feedback at DC, so that its input sits at its switching threshold. In consequence

relatively small (50m V pk-pk) voltage swings at the input are sufficient to cause the output to drive the following inverter buffer, IC104c, at CMOS levels. This CMOS level 10.7 MHz IF is used:

(a) as IF Counter drive

(b) as sampling point for IF detection circuit

(c) as source for the FM demodulator

FM demodulation

The FM demodulator works on the principal of generating fixed length pulses on each cycle of the IF. As the frequency increases, so the pulses become closer together and the average output voltage rises, and as the frequency decreases the pulses become further apart and the average output voltage falls. 10.7 MHz is too high a frequency to realise a practical demodulator design, it is convenient to mix down to 700 kHz. The required demodulated output voltage is quite small (a few mV per kHz dev.) compared with the 700 kHz/1.4 MHz component.

Exclusive-OR gate IC105 mixes the 10.7 MHz CMOS IF with the 10 MHz reference and buffers the output to give a 700 kHz IF after low pass filtering. The 700 kHz signal is converted to CMOS levels by Schmitt invertor IC106a with DC biased input. This feeds dual monostable IC107 which is configured to produce fixed length pulses on both +ve and -ve going edges of the 700 kHz input, typical pulse length is 550 ns determined by the time constant of R169 with the effective capacitance of C167 in series with C367, and of R170 with the effective capacitance of C168 in series with C368.

IC106 buffer provides an effective 220 Ω source for the demodulated signal which is AC coupled into a 5th order Butterworth 163 kHz LP Filter, this gives required rejection of 700 kHz and 1.4 MHz components. IC108a is a non-inverting stage with gain preset by [SET FM LEVEL] R181. The demodulator is flat from 10 Hz, as determined by C169 R175, to 50 kHz as determined by 163 kHz LP characteristic.

De-emphasis is provided by IC108b. R183 and C182 provide the 750 µs time constant for a simple low pass filter. The de-emphasis is designed to be used with a corresponding pre-emphasis, and has unity gain at 1 kHz.

In AM mode of operation the monostable IC107 is disabled, this prevents interference with the FM demodulator performance.

IF detection

If IF is absent IC107 is triggered by noise and produces a random sequence of output pulses, consequently mean DC level falls and coupling capacitor C169 discharges. When IF is restored C169 charges to its operating state of 4.4 V (approximately). The settling time can be significant in cellular radio measurements when tones need decoding within milliseconds of the carrier signal appearing. A fast response time is required and this is achieved by switching to a short time constant (0.2 ms) for coupling capacitor C169 whenever IF is absent, and returning to the long time constant after the presence of an IF signal has been detected. The IF Detection circuit determines C169 time constant by switching R179 in or out.

The IF Detection circuit consists of a low pass filter and driver for switch IC110. With random noise input, the low frequency components are passed through the LP filter and are amplified by saturating TR150. The collector waveform is -ve peak detected by D150 & C156 to give an output of approximately 0.4V which holds IC106(f) input Lo, and consequently IC110a switch closed. When an 10.7 MHz IF signal is present it is rejected by the filter so that TR150 is held in an Off state. Capacitor C156 charges to +5V with time constant of 4.7 ms giving a small delay before IC106(f) input goes Hi, IC110a switch opens and C169 returns to long time constant.

Output switching and 50 kHz low pass filter

CMOS switches IC109(a),(b),(d) select which demodulated signal is fed to the 50 kHz filter. R184-186 and D180-182 protect the switch IC109 from voltages greater than its ±5 V supply voltage. IC108d provides ×5.5 non-inverting gain.

The 50 kHz filter is approximately 3rd order Butterworth low pass, with a notch at 170 kHz in the stopband, to prevent aliasing in the switched capacitor AF filter following the demodulator.

The demodulated signal measured at the 50 kHz filter output, TP184, has nominal sensitivity of:-

AM	25 m V pk-pk per 1% mod depth
FM	100 m V pk-pk per 1 kHz deviation

Analyser ranging and filtering

This section consists of:

(a)	Analyser ranging and switching	} See Cct. Diag Sht.7
(b)	SINAD filter	
(c)	Band limit filters	} See Cct.Diag Sht.8
(d)	Standard frequency divider	

The Analyser switching circuits allow the instrument to be configured as an AF or DC voltmeter, oscilloscope, frequency meter, modulation meter, noise & distortion meter, or power meter. Signals can be routed through internal band limit filters, or switched to option or external filters. A wide range of input levels are catered for by range gain switching, with signals selected from AF IN, demodulator output, power meter AF, RF directional power head, SSB AF, and Cellular AF.

AF ranging

The AF input at PLN can be either AC coupled, or, when RLA is activated, DC coupled into a high impedance stage. IC200 is an inverting amplifier with 1 MΩ input resistance and gain ×0.5 or ×0.05 selected by IC210(a). C201 and C206 provide frequency compensation so that the amplifier characteristic is flat to 50 kHz. Preset R205 zeroes DC offset at TP200 under no-signal conditions.

IC201 is a non-inverting amplifier stage with gain switch selectable ×1.03 and ×10.3 by IC211(a). Preset [SET SCOPE SENSITIVITY] R210 adjusts Scope Sensitivity by setting gain between TP200 and TP201 to × 0.833 and 8.33. R211 zeroes DC offset at TP201.

IC205 is a non-inverting amplifier stage similar to IC201 and is preceded by a ×0.82 resistive divide. Preset R232 zeroes DC offset at TP202.

IC206(a) is an inverting amplifier with gain preset by [SET V/M SENS.] R238 to adjust gain between TP200 and IC206(a) pin 1 to ×0.424, ×4.24 . Diodes D200, D201 limit the voltage swing at IC206(a) output to within ±5 V on input signal overload.

Scope ranging

Input is selected by IC211(d) and IC212(a) from either AF or demodulated signal.

IC202(a) is an inverting amplifier with switchable gain ´2, and ´1, feeding non-inverting amplifier IC203 with switchable gain ×10, ×5, ×2, and ×1.

When the FM demodulated signal is routed to the scope further ranging is necessary to cater for 600 Hz - 75 kHz full scale deviation. IC207(b) is an inverting amplifier with gain ×0.83 and ×2.08 selected by IC212(b). IC211(c) when switched in reduces gain of IC202(a) amplifier to ×0.4, used on 75 kHz FS deviation range.

At this stage the AC signal is combined with a DC offset voltage to give vertical shift to the display. Combining resistors R223 and R225 attenuate the AC by a factor of 3. IC204(b) is designed as 2nd order Butterworth 125 kHz LP filter with non-inverting gain of ×3, so that overall AC gain is unity.

Vertical Shift voltage at PLH/1 varying between 0 V and +5 V causes the Scope Ranging output, TP210 to be offset between -2.5 V and +7.5 V, so that a signal occupying full display area (5 V pk-pk) can be shifted completely off the top or bottom of the scope display.

Voltmeter ranging

The input to voltmeter ranging is switch selectable from:-

AF IN	IC210(b)
PWR HD CH1	IC210(c)
PWR HD CH2	IC210(d)
AF IN (Cellular)	IC214(b)
AF IN (SSB)	IC214(d)
Demod Wideband	IC212(d)
Demod Filtered	IC109(c)

IC202(b) is a non-inverting amplifier with switchable AC gain ×1.84 and ×22.1 feeding non-inverting amplifier IC229 with switchable gain ×10, ×5, ×2.5, ×1

Full scale on all AF and demodulator ranges gives a signal level of (0.98) x5 V RMS = 4.882 V RMS at TP211. This is fed directly or through internal SINAD filter or (option) notch filter, as selected by IC217, to the Voltmeter Ranging O/P or Peak Ranging O/P.

SINAD filter

The SINAD filter is a steep-sided notch filter which allows the 'Signal to Noise And Distortion' (SINAD) ratio to be measured for a 1 kHz signal. The filter has an in-built gain of 20 dB

Nominal characteristic: DC gain = 20 dB

3 dB atten @ 800 Hz & 1.25 kHz

60 dB atten @ 1 kHz ±5 Hz

>70 dB atten @ 1 kHz

IC208(a) is configured as a 1 kHz 2nd order bandpass filter, at the centre frequency of 1 kHz it has an output of half the input amplitude, and is antiphase with it. This output is now summed with the input in the ratio 2:1 by IC208(b), signals at 1 kHz cancel, thereby creating a notch in the response. First stage between TP211 and TP212 has a DC gain of 6.7 dB.

The second stage consisting of bandpass filter IC208(c) and summer IC208(d) is virtually identical to the first stage except for feedback resistor which determines DC gain of 13.3 dB.

Preset R263 is adjusted to maximise 1st stage attenuation at 1 kHz measured between TP211 and TP212. Preset R273 maximises 2nd stage attenuation at 1 kHz, measured overall between TP211 and TP213.

Filter block

The upper frequency cut off is set by Low Pass filter IC221, a switched capacitor filter whose cut off frequency is determined by an applied clock. The clock is generated by a VCO, phase locked through a frequency divider to a 5 kHz reference; microprocessor control of the divider ratio enables the LP cut off to be incremented from 100 Hz to 20 kHz in 100 Hz steps. Anti-alias and clock rejection filtering is incorporated to optimise performance. The standard LP cut off frequencies are 300 Hz, 3000 Hz, 3400 Hz, 15 kHz and 20 kHz, a switch selected 300 Hz HP filter defines the speech band lower limit.

Filter block output can be measured at TP207.

Switched capacitor filter

IC221 is a switched capacitor Low Pass filter, type TLC04, with a 4th order Butterworth characteristic, and 80 dB dynamic range. Passband gain is nominally unity, the cut off frequency is determined by the applied clock frequency such that the two frequencies are in the fixed ratio 1:50.

The +5 V regulated supply is decoupled by R297/C241 to prevent aliasing signals from the demodulator stage being spuriously injected.

Clock generation

Clock (TP208) is generated by phase locked VCO, IC224. The VCO output is frequency divided by factor N and compared with a 5 kHz reference in phase comparator II of IC224.

R296 and C298 form the phase comparator low pass filter which effectively integrates the correction pulses.

C297, R295 determine VCO operating range up to 100 kHz.

C297, R295 parallel R315 determine VCO operating range between 120 kHz and 1 MHz.

VCO division is carried out by IC226 & IC227, cascaded binary counters, operating in count-down mode. The VCO output is fed to IC226 clock input. On the positive edge of each clock pulse the count decrements, eventually reaching zero on the Nth pulse, initiating the reset cycle. Both max/min outputs go Hi, decoded by IC225 to give the positive going, VCO divider output pulse (phase comparator input). On the lagging edge of the clock pulse, IC226 ripple output goes Lo. This is decoded by IC225 which generates a Lo pulse to load N into the counters. This terminates the reset cycle so that the first clock pulse decrements the counter to N-1.

Data loaded into IC226 & IC227 defines the cut-off frequency of IC221 LP filter:-

Data In (HEX)		Clock Frequency	LP Filter Cut Off
IC227	IC226		
0	3	15 kHz	300 Hz
1	E	150 kHz	3000 Hz
2	3	170 kHz	3400 Hz
9	4	740 kHz	14.8 kHz (nom.15 kHz)
C	8	1000 kHz	20 kHz

Clock rejection filter

This removes clock breakthrough from the switched capacitor filter.

IC209(b) is configured as a 2nd order LP filter with 2 selected cut off frequencies to cover 15 kHz to 1000 kHz range.

With IC219(c)&(d) open, 3 dB cut off = 32 kHz :

Pass band is flat to 0.1 dB up to 15 kHz

Insertion loss at 170 kHz = 30 dB, & at 750 kHz = 55 dB

With IC219(c)&(d) closed, 3 dB cut off = 1 kHz :

Pass band is flat to 0.05 dB up to 300 Hz

Insertion loss at 15 kHz = 50 dB

Anti-alias filter

Signals at frequencies close to the clock frequency will alias through the switched capacitor filter. Pre-filtering is incorporated to remove problem signals and give noise reduction.

IC220(a) is configured as a 2nd order LP filter, with 800 Hz cut-off when IC218(c) is open, and 50 kHz when IC218(c) is closed.

The 800 Hz anti-alias filter is selected when audio bandwidth is DC to 300 Hz.

Passband is flat within 0.1 dB up to 300 Hz

Insertion loss at 15 kHz clock frequency = 50 dB

The 50 kHz anti-alias filter is selected on all other audio bands.

Passband is flat within 0.1 dB up to 20 kHz

Insertion loss at 170 kHz clock frequency = 21 dB

and at 750 kHz clock frequency = 47 dB

300 Hz high pass filter

This filter selected by IC218(d) is used in conjunction with 3400 Hz LP to facilitate speech band measurements.

IC220(b) is a non-inverting buffer stage with unity gain.

IC220(c)&(d) circuit is configured as a 4th order 300 Hz HP filter with Chebyshev characteristic. The filter is designed to have theoretical passband ripple of 0.15 dB and insertion loss of 0 dB at 1 kHz, so that levels measured at this reference frequency are independent of filter combination.

Demodulation output

The demod output signal at PLK/3 (to rear panel) is selected from:

50 kHz bandwidth demodulator output direct through IC212(d), or from the internal filter section through IC219(a), or from the optional band filter through IC215(d). IC207(a) is a non-inverting amplifier with ×2 gain. IC209(a) buffers the demodulated signal to DEMOD OUT socket on the rear panel.

Maximum output level is 15 V pk-pk.

Nominal FM sensitivity is 200m V pk-pk per ±1 kHz deviation.

Nominal AM sensitivity is 50m V pk-pk per 1% mod depth.

Standard frequency divider and 25 kHz generation

IC222 and IC223 are dual decade counters which divide the 10 MHz clock from the microprocessor to provide:

1 MHz clock for AF synthesisers

50 kHz clock for the IF Counter

25 kHz for RF power meter

5 kHz reference for VCO phase locked loop

1 kHz alarm signal

The 30 kHz LP filter is designed to convert 25 kHz 5 V pk-pk square wave into a 1 V RMS sinewave to be used in the RF power meter. Harmonic content is not critical, typically <1%

IC228 is configured as a 4th order LP filter with Chebyshev characteristic, 3 dB cut off frequency is 30 kHz. R290 and R291 provide the desired level conversion.

IF counter and audio circuits

IF counter

The circuit consists of a Binary Counter IC304, Programmable Interval Timer IC301, Tri-state Buffer IC302, and Nor-gate IC303.

The 10.7 MHz IF from the limiter is gated in IC304 and counted in IC301. The output count is fed to the microprocessor over the 8-bit data bus.

Binary counter

IC304 is used as a single divide by 2 counter, clocked from the 10.7 MHz IF limiter. This ensures the input to the Interval Timer IC301 is kept well within its operating limit of 8 MHz.

The counter is enabled by a 1 s, 100 ms or 10 ms active Hi gating pulse derived from IC301, and inverted by IC303(b).

The counter is cleared when CLR(L) BIN CNTR from Address Decoder is active Lo.

Programmable interval timer

IC301 type 82C54 contains 3 independent counter/timer circuits.

Mode of operation is controlled by data written from the 8-bit data bus to registers addressed by latched address when CS(L) IFCNTR and BUF WR(L) are active Lo.

Counter2 is operated in Mode1 - hardware retriggerable one-shot mode - and, when triggered, counts a 50 kHz clock to produce a 1 s, 100 ms or 10 ms pulse used to gate IC304. Counter2 is triggered by a positive pulse when EN(L) BIN CNTR and BUF WR(L) are active Lo.

Counter0 and Counter1 are cascaded and operate as binary counters in Mode2 - rate generator mode - Counter0 divides by FFFF (HEX) and is clocked by IC304 output, Counter1 is clocked by inverted Counter0 output and only reads correctly if it has received an overflow pulse from Counter0. For 1 Hz and 10 Hz resolution there is always an over- flow, but for 100 Hz resolution (10 ms gate) Counter1 output is ignored.

Counter output is read onto the 8-bit data bus when CS(L) IFCNTR and BUF RD(L) are active Lo.

IC302 is a tri-state buffer which reads the Binary counter output onto D0 line of 8-bit data bus when EN(L) BIN CNTR and BUF RD(L) are active Lo.

Audio drive

The AUDIO signal fed to the loud speaker is derived from the demod O/P signal or AF routed to the voltmeter ranging. This signal, which can have a maximum amplitude of 15 V pk-pk, is attenuated by R300/R303 & drain-source resistance of TR230, and fed to the non-inverting input of IC231.

IC231 is an audio power amplifier capable of driving 0.25 W into an 8 Ω speaker. R306 sets the amplifier voltage gain to 32 dB, and R305/C305 series combination provides high frequency stability. IC231 has 50k resistance to ground from both IN V and non-IN V inputs.

TR230 is an N-channel D-MOS FET, its drain/source resistance sets the overall gain: with FET OFF, Rds > 5M, the gain is maximum; with FET fully ON, Rds < 5 Ω, the gain is minimum. Vgs is set by PLH/3 voltage (VOL L/S) from front panel. With PLH/3= 0 V, Vgs <0.8 V so FET is OFF maximising volume; with PLH/3= +5 V, Vgs >3 V so FET is ON minimising volume.

In normal mode D300 is biased OFF, and IC230(d) output is Lo.

When OVERLOAD line is latched Hi, D300 clamps Vgs of TR230 to +4.4 V irrespective of Volume control, hence FET is biased On. IC230(b) is enabled and generates a 2 Hz square wave which is used to gate a 1 kHz 5 V pk-pk signal in IC230(d). This gated signal is attenuated by R304 and ac-coupled to the IN V input of audio amplifier IC231, causing the loud speaker to emit an over-riding alarm note.

Microphone input

The MIC input on the front panel ACCESSORY socket, is amplified and used as the modulating signal.

The audio input is AC coupled through C77 to IC71, a combined microphone preamplifier and automatic gain controlled amplifier. R79 and C79 determine the AGC response times, nominal attack time is 7 ms, and nominal decay time is 500 ms. IC70(b) is a non-inverting amplifier stage, coupling capacitor C89 determines the LF cut-off, and feedback capacitor C97 the HF cut-off; nominal 3 dB bandwidth is 200 Hz to 4 kHz.

IC70(b) gain is set to compensate for the range in IC71 output levels; [SET O/P LEVEL] R83 is preset to make TP71= 1 V RMS for 1 kHz microphone input level of 100m V.

Interrupt generator

IC70(a) is configured as a comparator with input threshold at 1.1 V.

In NORMAL mode (Toggle =Hi & Pwr Hd =Lo) MIC IN is biased at 2.2 V, the comparator output is -ve which biases TR70 OFF, TX INTERRUPT output is Hi. D70 limits TR70 emitter- base reverse bias. With headset connected and microphone `Press to Transmit' button depressed the comparator input is biased at 0 V, the output is +ve which turns TR70 ON, TX INTERRUPT output becomes Lo.

TX INTERRUPT logic Lo requests the 2947 to be configured in transmitter mode with microphone input providing the modulation.

In PWR HD mode (Pwr Hd =Hi) the Toggle state is fed to the Power Head through D71, PLJ/1 and Front Panel Accessory Socket.

Option state buffer

The presence or otherwise of available options is recognised by the logic state of IC310 inputs. These are normally pulled Hi by R310, but if an option is fitted, then the appropriate line is tied to earth i.e Lo. IC310 is a tri-state buffer, when CS(L) OPTION and BUF RD(L) are active Lo the state of the lines A1 to A6 are transferred onto D1 to D6 of the 8-bit data bus to be read by the microprocessor.

B2/1 Microprocessor board (44830/110)

The sequence of descriptions for the various circuits on this board follow the flow of the relevant circuit diagram sheets from left to right and from sheet one to sheet five.

10 MHz master clock

Overview

The 10 MHz internal frequency standard Oven Controlled Crystal Oscillator (OCXO) is mounted on the frame of the 'B' tray and connected to the board through PLB.

The clock signals of various frequencies, required for board B2/1 and other areas of the Service Monitor, are all produced by the master clock circuits or derived from it. If an external frequency standard is connected to the instrument, the OCXO is locked to the external standard. See Fig. 1-4 below.

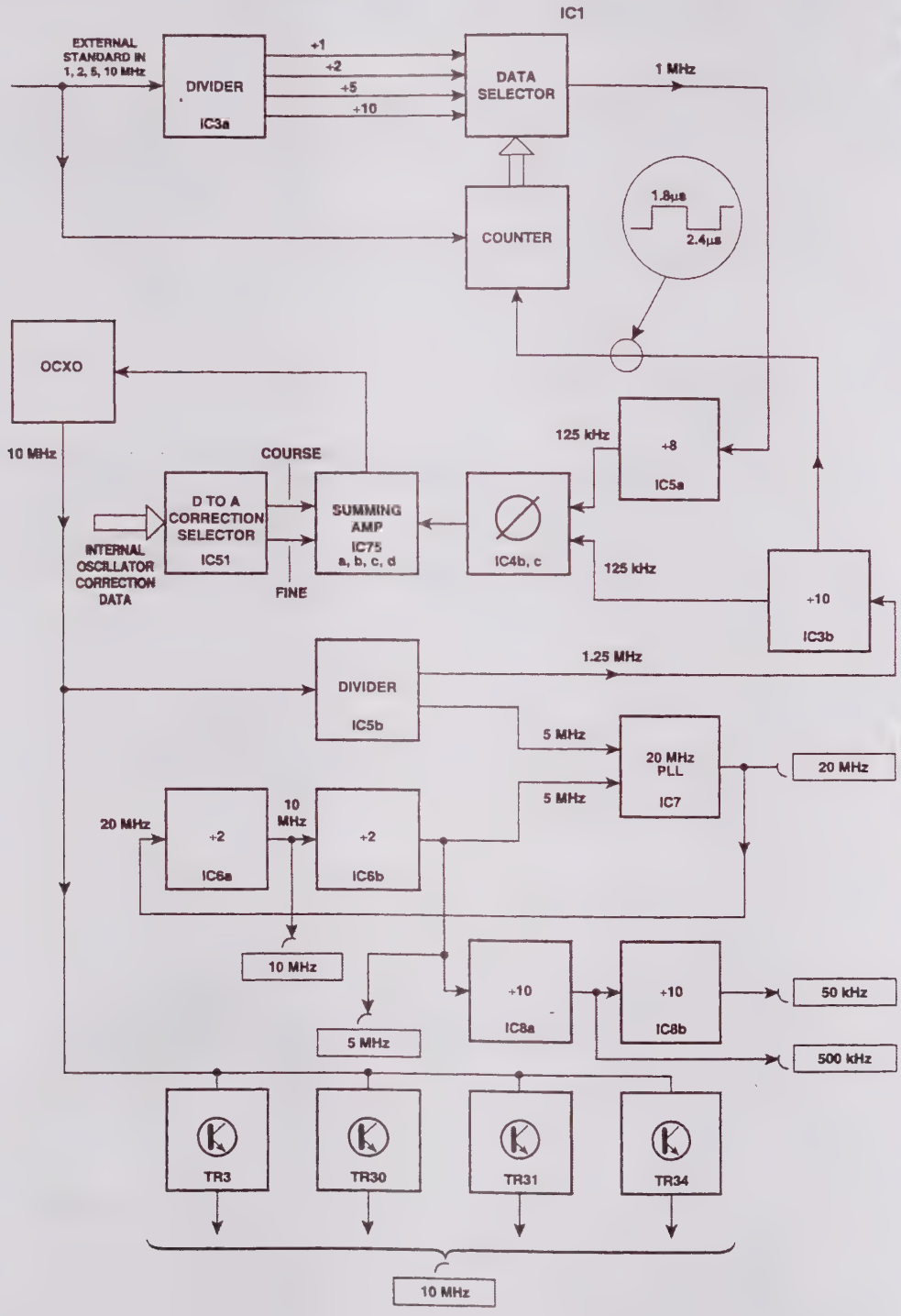

Fig. 1-4 Block diagram of master clock

OCXO

The OCXO requires a 12 V supply, connected through PLB, pin 4. The 5 V supply connected to pin 3 is not used. The frequency control voltage is supplied to it through pin 5, and the 10 MHz output to the board is through pin 1.

The frequency of the internal frequency standard can be corrected to offset any error in its basic frequency. A frequency offset is applied from the frequency standard adjustment screen, accessed by using the [HELP/SETUP], *[Calibrate]*, *[Freq Stnd]*, key sequence. A security code restricts the use of the *[Calibrate]*, key. Details of the use of all the calibration facilities will be found in Chapter 3, Adjustments and Calibration.

Correction to the clock frequency is achieved by applying a correction voltage to the oscillator. Correction data entered from the instrument calibration screen is processed and sent over the data bus to a digital to analogue converter IC51. Course and fine control voltages are produced from the outputs of this IC, which are buffered by IC75(a) and IC75(b). The buffered outputs are fed to the summing circuit built around IC75(c).

The correction voltage will be applied to the internal oscillator whenever the Service Monitor is operating.

External standard frequency sensing and dividing

The Service Monitor can be locked to an external frequency standard of 1, 2, 5 or 10 MHz where this is appropriate.

The external standard does not drive the clock system directly, but is compared with the frequency of the internal oscillator and a difference signal generated to correct the internal oscillator. The external frequency standard signal enters the board at PL4, pin 2, and fed to buffer amplifier TR2. The output from the collector of TR2 is passed through an inverter and level corrector, IC52(e), then to the clock input of PAL IC1, pin 1 and also to the 'Divide by 1' input.

The buffered external reference signal is also fed to the 'A' input of frequency divider IC3(a), which provides outputs ÷2 on pin 3, ÷5 on pin 5 and ÷10 on pin 6. These outputs are fed to the 'Divide by 2', 'Divide by 5' and the 'Divide by 10' inputs of PAL IC1.

A periodic reference signal, derived from the internal 10 MHz clock, is produced by IC3(b) and fed to the REF input, pin 2, of IC1. This reference signal has a high period of 1.8 µS and a low period of 2.4 µS. The logic programmed into IC1 counts the number of pulses on its clock input, pin 1, during the low period of the reference signal, and from the result, selects one of the 'Divide by' inputs to route to the output on pin 13. The selected signal will always be 1 MHz.

This signal is fed to the 'A' input of IC5(a) which is configured to ÷8, thereby producing an output of 125 kHz, derived from the external frequency standard, on pin 5.

IC5(b) is configured to ÷8, and a signal from the internal 10 MHz clock is fed to the 'A' input, pin 13. The 1.25 MHz obtained is passed from the QC output on pin 9, to the 'B' input of IC3(b). This is configured to ÷10, thereby producing a 125 kHz signal, derived from the internal frequency standard, on pin 13.

The output from IC5(a) is fed to one input of XOR gate IC4(b), and that from IC3(b), to the other input. An output from IC4(b) will only result from any phase difference between the two signals. This is fed through XOR gate IC4(c) and then to integration network R8, R9, R10, C5 and C6. The voltage developed across C6 is fed through R11, to be summed with the frequency control voltage from IC75(c) through R13, at the input to IC75(d).

The phase difference between the output of IC5(a) and the output of IC3(b) under locked conditions is approximately 90°. Therefore the voltage across C6 will rise or fall with any phase change between the two signals, producing an increase or decrease in the control voltage to the internal frequency standard, thereby locking it to the external standard.

20 MHz phase locked loop

Although the 80C188 microprocessor IC13, runs at 10 MHz, it requires a 20 MHz clock input, which it divides by 2 so as to produce a 10 MHz clock with an accurate 50/50 mark space ratio. This is fed into the microprocessor X1 input, pin 59. Test point TP5 is a monitor point for this.

The 20 MHz clock is produced by the phase locked loop oscillator, IC7.

The frequency setting capacitors C13 and C14, cause the oscillator on the IC to run at approximately 20 MHz.

The phase comparison inputs of the oscillator are configured to operate at 5 MHz, with 50/50 mark/space ratio signals. The input signal fed into pin 6 is obtained from the QA output of IC5(b), which is a ÷2 output obtained from the 10 MHz clock.

The 5 MHz signal for the 'Phase' input, pin 3, is obtained from the oscillator output 'OUT 1' and fed through two ÷2 flip-flops IC6(a) and IC6(b). Any phase difference between the two inputs is used within IC7 to correct the output frequency.

Master clock outputs

The master clock provides emitter follower outputs from TR3, TR30, TR31 and TR34.

The output from TR3 leaves the board on PLC pin 1 for use on the 1st local oscillator board A8/1.

TR30 provides the clock signal for the 2nd and 3rd local oscillator board A9/1, routed through PLC pin 4.

The output from TR31 is routed through PLY, pin 2, to the RF generator tray. An alternative route through PLC, pin 6, is not used on this instrument.

PLU provides the clock signal for the SSB demodulator board A15, from TR34.

Other frequency outputs

The master clock circuit also produces frequency-stable clock signals for use on the microprocessor board.

A 10 MHz signal from pin 6 of IC6(a) is routed to the AF processor board B1/2, through PLK, 3 pin.

A 5 MHz signal from pin 8 of IC6(b), is fed to PLG, pin 5, for use by the GPIB interface.

A 500 kHz signal derived from the 5 MHz signal on IC6(b), pin 8, is produced at the ÷10 output of IC8(a), and used as the clock for 8 channel A to D converter IC44.

A 50 kHz signal is produced by dividing by 10, the signal from IC8(a), using IC8(b). This is used within the microprocessor, IC13, as a timing standard for 'Tones' generation, being fed to the 'TMRIN0' input on pin 20 and can be monitored at TP6.

This 50 kHz signal is also used to switch the diode pump circuit, TR21 and TR22, which produces -18 V for the LCD backlight.

Reset circuit

A reset circuit functions whenever the Service Monitor is powered up. This resets the microprocessor, which initiates an instrument reset.

The reset line for the microprocessor is provided by IC81 and can be monitored at TP16. This monitors the +5 V power rail and produces a 300 ms low pulse from the RES connection, pin 5, after the power rail has risen above 4.5 V. The reset line is directly connected to the RES (low) connection, pin 24, of the microprocessor. When this pin is held low the microprocessor resets internally and sends the RESET connection, pin 57, high. RESET stays high until RES (low) is returned to the normal (high) state. RESET is fed to the following circuits:-

IC19 address decoder PAL

The serial interface.

The GPIB interface connection.

The systems board.

A reset can be initiated by shorting test point TP4, to test point TP30, using a shorting connector. The microprocessor will remain in the reset state, with RES (low) held low until the link is removed.

Microprocessor

The 80C188 processor has a 16-bit internal data bus, with an 8-bit external data bus and a 20-bit external address bus.

The lower 8 bits of address (A0-A7), are time-multiplexed with the data lines (D0-D7), on AD0, pin 17, to AD7, pin 2.

The address/data lines AD0-AD7 and the address lines A8-A19 contain a valid address during the first period of an address/data operation. Each of these lines is connected to one input of latches IC14, IC15 or IC16.

During this time ALE, pin 61, is high, which enables the latches, thereby allowing the address bits to enter.

At the end of the address period, ALE goes low, the latches are disabled, and the address bits retained within the latches and readable from the Q connections.

Data transfer can then take place.

Addressing

The 20-bit address bus accesses 1 M byte of memory, which is divided up as follows:-

Address	Description	IC number
00000H to 1FFFFH	RAM	IC9
20000H to 21FFFH	NOVRAM	IC10
22000H to FFFFFH	EPROM main software	IC11 and IC12

Address decoding for the RAM, IC9, is generated by the 80C188 on the ~LCS, pin 33. This pin goes low when a RAM address is referenced, thereby taking CE1 low on the RAM, pin 22.

Address decoding for the NOVRAM, IC10, is also generated by the 80C188, but on MCS0, pin 38, which enables the NOVRAM by taking its CE1 low, pin 22.

Address decoding for the EPROMs is generated by PAL IC18. I/O7, pin 18, being taken low will enable IC11, and I/O5, pin 16 enables IC12.

The design of this board allows either 256 kbyte or 512 kbyte EPROMS to be used, depending on the software requirements. The size of each EPROM is setup in software, by writing to latch IC40, immediately after power-up. ROM 1 SIZE, from IC40, pin 19, to IC18 IN1, pin 2, selects the size of IC11. A low selects a 256 kbyte 27C020 and a high selects a 512 kbyte 27C040.

Similarly, ROM 2 SIZE, from IC40, pin 16, to IC18 IN2, pin 3, selects the size of IC12.

IC11 being a 27C020 and IC12 being a 27C040 is not a valid selection.

As well as providing 1 Mbyte of memory space, the 80C188 provides 64 kbytes of I/O space. This is selected when S2, pin 54, on the microprocessor is low.

All peripherals except the RAM, NOVRAM and EPROM are accessed through I/O.

I/O address decoding

I/O address decoding is performed by five devices as shown in the following tables. A decode of the address by the device results in the specified pin going low`.

Wait states

Because the different peripherals on the I/O require different bus speeds, wait states are inserted into the read/write cycles for certain I/O locations. The control of these wait states is one of the functions performed by PAL, IC19. The number of wait states inserted for each perennial location is shown in the decode tables.

The wait state PAL latches in A13, A14, A15 and S2 on ALE, and controls the ARDY line, pin 55, on the microprocessor. This holds the microprocessor until the peripheral is ready.

Table 1-1 PAL IC18

Address	Description	Pin number	Wait states
0000H to 3FFFH	8-channel ADC	13	2

Table 1-2 3 to 8 line decoder, IC24

Address	Description	Pin number	Wait states
4000H to 47FFH	Memory card option	15	1
4800H to 4FFFH	Memory card page	14	1
5000H to 57FFH	DSP interrupt	13	1
5800H to 5FFFH	Options fitted buffer	12	1
6000H to 67FFH	Interrupt buffer	11	0
6800H to 6FFFH	RF1 latch	10	0
7000H to 77FFH	RF2 latch	9	0
7800H to 7FFFH	Spare latch	7	0

Table 1-3 3 to 8 line decoder, IC25

Address	Description	Pin number	Wait states
8000H to 87FFH	Attenuator latch	15	0
8800H to 8FFFH	Clock adjust DAC	14	0
9000H to 97FFH	Not used	13	0
9800H to 9FFFH	Not used	12	0
A000H to A7FFH	B1 board address latch	11	3
A800H to AFFFH	B1 board data latch	10	3
B000H to B7FFH	LCD contrast / log amp shifting DAC	9	3
B800H to BFFFH	LCD backlight input select	7	3

Table 1-4 PAL IC19

Address	Description	Pin number	Wait states
C000H to DFFFH	EEPROM	15	0

Table 1-5 Microprocessor, IC13

Address	Description	Pin number	Wait states
E000H to E07FH	Serial (RS232)	26	1
E080H to E0FFH	GPIB option	27	2
E100H to E17FH	Cellular option	28	0
E180H to E1FFH	Keyboard	29	0
E200H to E27FH	Front panel variable	30	0
E300H to E37FH	LCD driver gate array	31	0
E380H to E37FH	Not used	32	0

Other functions of PAL IC19

IC19 performs two other functions.

These are the EEPROM, IC32, chip select on pin 15, and the generation of a 3.077 MHz clock signal.

The 3.077 MHz clock is required by the serial interface controller, IC41, pin 20.

The baud rate signal for the serial interface controller is generated by the microprocessor. The 3.077 MHz clock signal is passed through ÷2 flip-flop IC77(a), to produce a 1.5385 MHz signal which is fed to TMR IN 1 of the microprocessor, pin 21. The baud rate signal is produced on TMR OUT 1, pin 23, when required, and fed to the serial interface controller, IC41, pin 25.

Buffered and quiet data busses

The I/O peripherals are connected onto the data bus through one of two bi-directional buffers, IC21 and IC22. The exception to this is the 8-channel analogue to digital converter, IC44, which has direct connections onto the address/data bus AD0 to AD7.

IC21 provides the 'Buffered' data bus, BD0 to BD7, which is active for addresses 4000H to 7FFFH and C000H to FFFFH.

IC22 provides the 'Quiet' data bus, QD0 to QD7, which is only active for addresses 8000H to BFFFH. This provides a bus with less noise, for use by the audio processor board B1/2.

Interrupts

The 80C188 microprocessor provides 4 external interrupt lines.

Interrupt	Description	Multiplexed from:-
IN0	DCS interrupt from Audio processor board B1/2	
IN1	RxRDY receive interrupt from serial interface, IC41.	
IN2	GPIB interrupt	
IN3	Multiplexed interrupt	Cellular Sweep/DSP * Front panel variable Keyboard * 8 - channel ADC TxRDY from serial controller Tx from audio processor board, B1/2. *

The multiplexed interrupt to IN3 is formed by NANDing the interrupts together using NAND gate IC26. When an interrupt is received on IN3, the microprocessor must determine which of the multiplexed interrupts is active. This is done by reading the output of tristate buffer IC27, the inputs of which are each connected to one interrupt line.

The three interrupts marked * in the above table,are passed through XOR gates so that the polarity of the interrupt can be changed. By doing this when the interrupt has been acted upon, a second interrupt is created when the action causing the original interrupt is terminated. Using the keyboard interrupt as an example, pressing a key will cause a keyboard interrupt to be placed on IC29(b), pin 4. The state of IC29(b) output will change, putting an interrupt signal on the appropriate input of NAND gate IC26 and buffer IC27. When the microprocessor has identified the interrupt and acted upon it, the state of pin 5 of IC29(b) is changed through latch IC28. This changes the state of IC29(b) output thus removing the interrupt from INT3. When the key is released, The state of IC29(b), pin 4, will change, putting a new interrupt on INT3.

IC30, controlled by IC28, is used to select between the sweep and DSP interrupt. The state of input A of IC30, pin 14, controls the selection. When input A is high, sweep interrupt is selected, as 2C1, pin 11 the active input. When input is low, DSP interupt is selected, as 2C0 is active.

Keyboard decoding

The keys on the front panel of the Service Monitor are connected as an 8×8 matrix, with the rows and columns arranged as shown in Fig. 1-5 below.

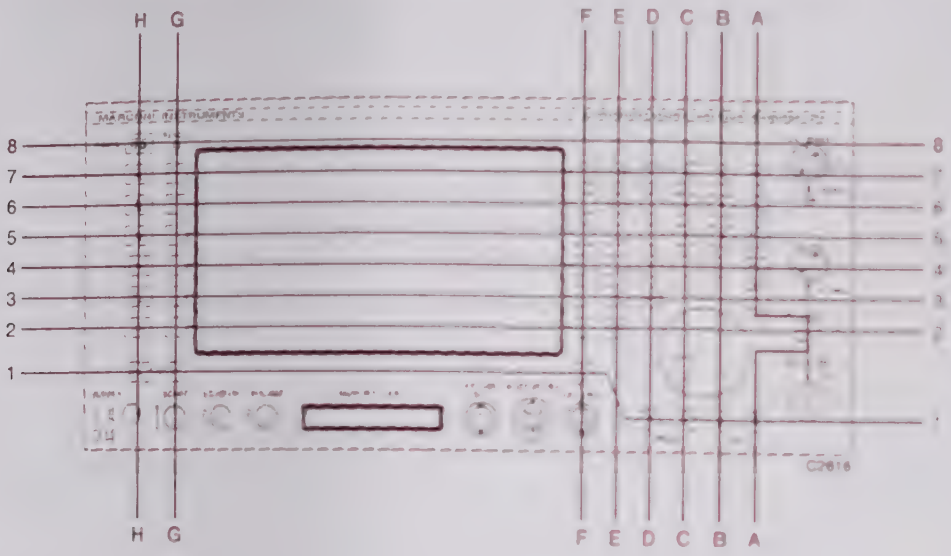

Fig. 1-5 Front panel key matrix

The front panel keys are connected to board B21 through PLF. When a key is pressed the connections to the relevant row and column are shorted. The identity of the key is passed to the microprocessor, using priority encoders IC38,IC39 and buffer IC35. The action of this is described below, and a simplified diagram is given in Fig. 1-6 below.

When a key is pressed, for example the [HELP SETUP] key, the matrix row line 8 will be connected to matrix column line H. IC38-7, pin 4, will be pulled down to 0.7V as it turns on TR11. IC39-7, pin 4, will also be pulled down as TR11 turns on.

The LOW on priority encoder IC38-7 will be encoded onto its outputs A0 to A2. The LOW on IC39-7 will similarly be encoded. The value of the three bit codes on each of the encoders is read through IC35.

The link from IC38 G5 to IC39 E1 connect these encoders in cascade therefore when a key is pressed the G5 output from IC39 goes low. This is de-bounced by IC17(b) and IC17(c) to generate the keyboard interrupt, which can be monitored at test point TP10.

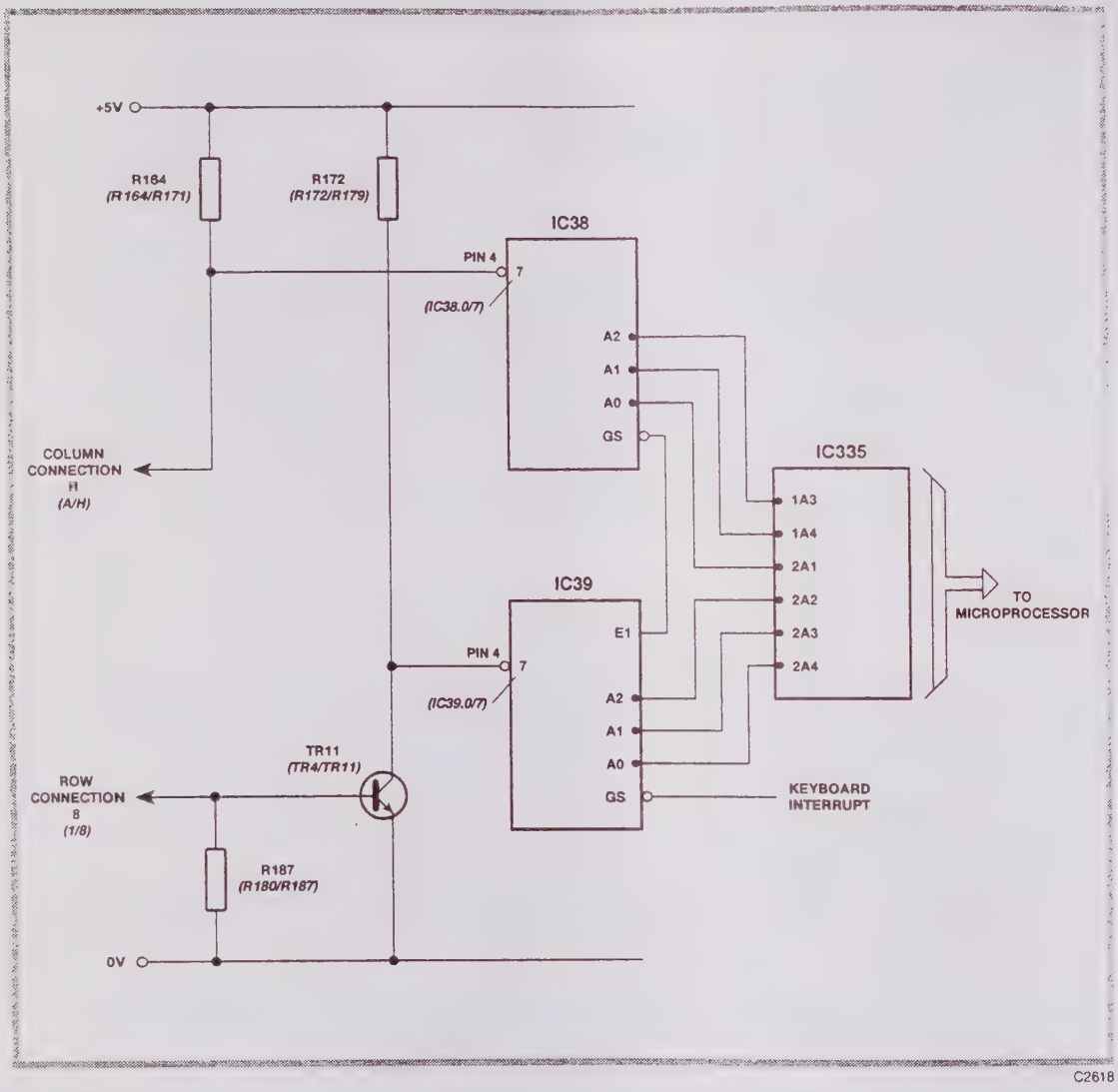

Fig. 1-6 Simplification of keyboard encoding

Front panel LEDs

The LEDs on the front panel are connected onto board B2/1 through PLF pins 5 to 9. They are driven by IC34, a low output turning on the LED. The circuits to pins 3 and 4 are not used.

Front panel variable control

The front panel variable control is connected through PLH. Pins 1 and 3 are the +5V and 0V supply to the active components within the control. When the control is rotated a square wave signal is produced on pin 5 and pin 6. There is a 90° phase difference between these signals, which allows the direction of rotation to be determined by 'D' type flip-flop, IC37(b). The value of PLH/5 is latched into IC37/(b) by the positive going edge of the signal on PLH/6. The output from IC37(b) will be low for clockwise rotation and high for anti-clockwise rotation.

See Fig. 1-7 below.

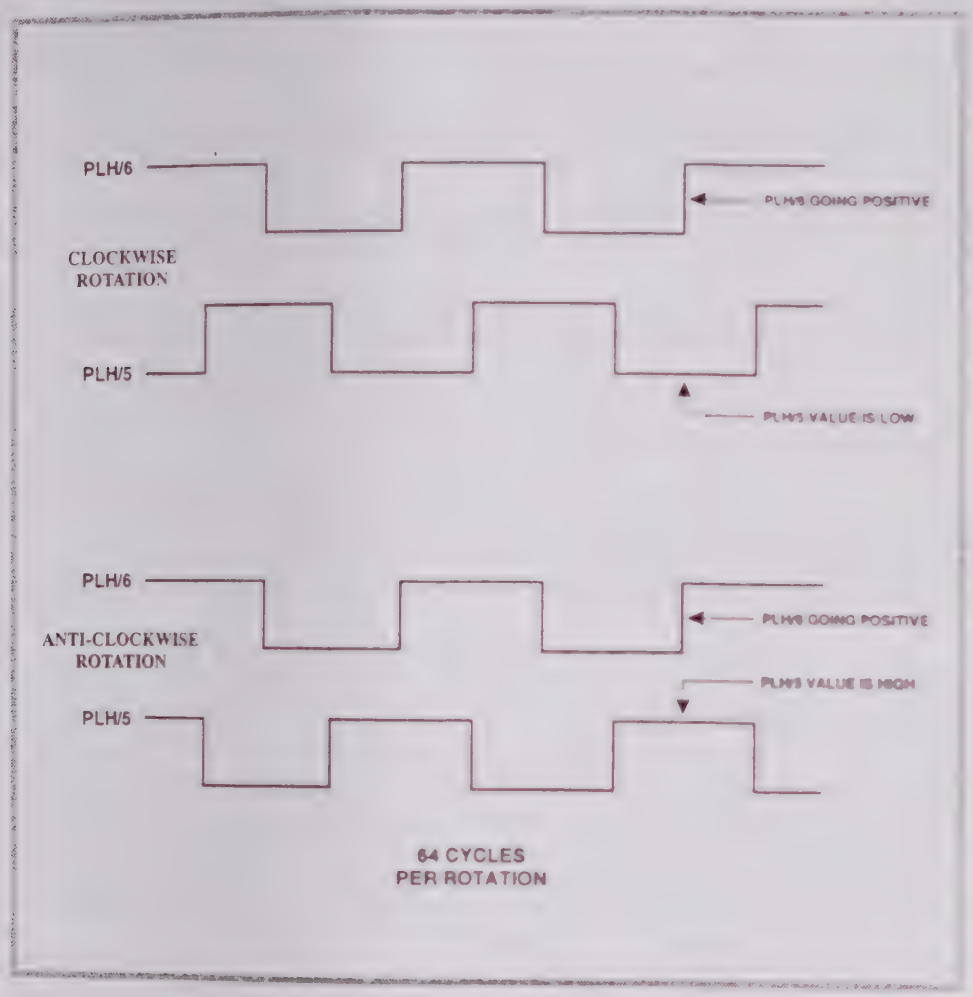

Fig. 1-7 Variable control direction determination

The signal on PLH/6 is also fed to the clock input of IC37/a, which generates the 'Variable' interrupt. Each 'Variable' interrupt causes the microprocessor to read the direction of rotation signal and increment the value of the setting currently given to the variable control operation. Each 360° rotation produces 64 cycles of output signal.

Options fitted, identification

The microprocessor has to have an indication of any options that are present in the Service Monitor. This is done using buffers IC33 and IC84. The resistors to each of the inputs of the buffers pulls the inputs high when there is no other connection to the inputs. When an option is fitted, the appropriate input is pulled to 0V on the option board, thereby indicating its presence.

Calibration data EEPROM

The calibration data for the Service Monitor is held in EEPROM IC32.

Serial interface

The serial interface consists of a UART (universal asynchronous receive transmit) device, IC41; an output driver, IC42; and an input buffer, IC43.

The output data, TxDATA, from the UART, together with the output control signals RTS and DTR, are fed to the output driver IC42. The output from the driver is routed through PLJ to the serial connector on the rear panel.

Input data and the control signals from the rear panel connector are routed through PLJ to the input buffer IC43. The output from this buffer is connected to the UART RxDATA input, and the control inputs CTS and DSR.

The RXRDY interrupt is generated by the UART, and provides a direct input to the microprocessor, whereas the TXRDY interrupt, also generated by the UART, is multiplexed by IC26.

The baud rate clock, produced by the microprocessor, is provided to the Rx CLK input, pin 25, and to the TxCLK input, pin 9, of the UART. The provided signal is 16 times that of the baud rate.

A 3.077 MHz signal, from the master clock circuits, is fed to the UART CLK input, pin 20.

8 channel analogue to digital converter

The measurements made on the various parameters of the equipment under test must be converted to digital values before being processed by the Service Monitor software. This is carried out by 8 bit, 8 channel, analogue to digital converter, IC44.

The input to be converted is selected by the address on the three address lines ADDA, ADDB and ADDC.

The conversion function is started by a pulse on the START and the ALE inputs of the ADC. The pulse comes from IC45(a), as a result of signals from address decoder IC18 and from the microprocessor.

When the ADC has completed the conversion, it generates an interrupt on EOC. The microprocessor then reads the digital value over the address/data lines ADo to AD7.

Table 1-6 Analogue to Digital Converter IC44 inputs, lists the eight inputs to the ADC, the address which enables each selection and details of the measurement origin.

Table 1-6 Analogue to Digital Converter IC44 inputs

Address	Input selected		Description	From:-
0000H	IN0	(Pin 26)	DC to RMS converter (TP13)	AF volts Wide band power Distortion demod level SINAD reading S/N reading
0001H	IN1	(Pin 27)	Positive peak detector (TP14)	Positive demodulation level
0002H	IN2	(Pin 28)	Negative peak detector (TP15)	Negative demodulation level
0003H	IN3	(Pin 1)	Temperature	Service Monitor internal temperature
0004H	IN4	(Pin 2)	Squelch	Position of front panel control
0005H	IN5	(Pin 3)	Log amplifier	Narrow band power reading
0006H	IN6	(Pin 4)	Low battery indicator	External battery condition
0007H	IN7	(Pin 5)	Not used	

The ADC 5 V Reference voltage to pin 12, is supplied from the +12 V rail, through voltage stabiliser IC78. This can be monitored on TP12

A 500 kHz clock signal from the master clock circuits is supplied to pin 10.

RF attenuator drivers.

The 2-stage RF input attenuator A21 and the 3-stage output RF attenuator A20, are controlled from board B2/1.

Each stage of the attenuator has two activating solenoids, one which inserts the attenuator in circuit, the other to remove it. Three control lines are therefore needed for each stage.

There is no requirement for the input and output attenuators to be switched simultaneously, therefore selection is carried out using common circuitry, with an input or output selector determining which is switched.

Transistors TR12 to TR17 provide a return path for the selected control line while TR18 and TR19 provide a 5 V supply to the selected attenuator assembly. The active transistors are turned on by the appropriate outputs from latch IC47 being made high.

Diode pairs D13 to D15 provide protection against reverse voltage produced by switching the operating solenoids. Diode pairs D16, D17, D18 and D31 prevent current flowing into solenoids that are not selected.

To set up the attenuators, the microprocessor writes to IC47, and the values are latched into it. The clocking signal to IC47 also triggers monostable flip-flop IC46(a), which produces a 45 ms pulse at IC47 OE, pin 1. This can be monitored on TP17. The latch is opened for the duration of the pulse thereby activating the selected attenuator control lines for sufficient time to take up the required states.

Oscilloscope trigger

The oscilloscope trigger signal is produced by the circuit around opamps IC50(a), IC50(b), IC50(c) and inverter IC82(d).

The signal from audio processor board B1/2, to the oscilloscope input, is tapped by C40 to provide an input to the trigger generator. It is clipped by D19 and D20 before being amplified by IC50(a). Further pulse shaping produce a square wave at the output of inverter IC82(d). This can be monitored at test point TP18. As well as providing the oscilloscope trigger, this signal drives the AF counter.

RF overload

The Service Monitor gives an audible and visual warning of RF input overload. The trigger signal for this is produced by the RF overload detector circuit.

The inputs to the overload detectors are obtained from two different sources. Peak detectors on the input switching board A1/1 provide negative and positive peak level signals at PLN33 and 34 respectively. An overheat signal, from a thermistor sensor on the RF input load, enters the board on PLD ,pin 1.

The peak detector signals are applied to the inputs of opamp IC48(d), through the potential dividers formed by R101, R103, and R102, R104. If either of the peak detector signals exceed the design level, the output of IC48(d) goes to +12 V producing a +5 V input to OR gate IC36(d). The output from this gate feeds into one input of NOR gate IC45(c), which ultimately controls the RF input switching. The logic configuration ensures that when the overload detector circuit is triggered, the input switch selects the N type input.

The output of IC36(d) is also directly coupled to the 2A4 input, pin 17, of buffer IC33. This buffer is read by the microprocessor at frequent intervals, therefore an RF overload will be detected and the audible and visual warning triggered.

RF latches

The RF tray control is performed through latches IC52 and IC53. The control signals are routed to the RF tray through PLN.

TR20 provides the gain control signals for the Input Mixer board A2, which requires –12 V for setting 20 dB gain and +12 V to set 0 dB gain. When IC53 Q6 output is low, the base of TR20 will be at –12 V due to R108, R107 and D1. Therefore the collector of TR20 will be high

When IC53 Q6 output is high, it will be approximately 17 volts above the −12 V line, therefore D1 will conduct. This will take the base of TR20 high, causing TR20 to conduct, taking its collector low.

Latch IC54 is not used in this instrument.

Display controller gate array

Gate array IC55 is programmed with the display controller logic. It contains eight internal registers. These provide the processor interface to
The screen RAMs IC63 and IC64
The graphics controller DSP, IC56
The time base generator, (built into the gate array).
Other functions, (screen clearing)

The gate array interfaces directly to the display through SKA, with no additional logic.

The signals on SKA are shown in the table below:-

SKA	Symbol	Description	
1	Vdd	+5 V	
2	Vss	0 V	
3	Vee	Contrast	(-4 V to -17 V)
4	LP	Latch pulse	One positive pulse every 90 µs
5	FR	Frame pulse	55.6 Hz square wave
6	N/C		
7	N/C		
8	DIN/YD	Start scan pulse	One positive pulse every 9 ms
9	XSCL	Data shift clock	Alternate 200 ns and 300 ns positive pulses, with 200 ns intervals
10	N/C		
11	XD0	Display data	
12	XD1	Display data	
13	XD2	Display data	
14	XD3	Display data	

Screen data consisting of characters and lines is stored in RAM IC63, while RAM IC64 stores moving graphics (oscilloscope traces etc.).

RAM IC64 is also used as a link between the microprocessor and DSP IC56. DSP executable programs are downloaded into IC64 from the microprocessor through the gate array, from where they are subsequently uploaded into the DSP and ran.

Information is also exchanged between the microprocessor and the DSP using IC64. The interface between the DSP and RAM IC64 using a PAL IC57 for address decoding, and five latches IC58 to IC62.

Data transfer from the RAM to the DSP is through IC58, and that from the DSP to the RAM is through IC62.

IC59, IC60 and IC61 are used for address latching.

The DSP IC56 is used for the following functions:.

Scope trace

Barcharts

Spectrum analyzer trace, Including RF sweeping

Transient analysis trace

Audio counter

Sequential and DTMT tones decoding

DCS tones decoding

POCSAG decoding

Circle and line drawing in VOR screen

DSP control lines

The !RESET line to the DSP, pin 26, is driven from the microprocessor through the gate array IC55 pin 58. It is used to initialise the DSP and cause it to halt and a new executable program from RAM IC64. The action of this line can be seen by monitoring test point TP26, while causing a new program to be loaded into IC56 by, for example, pressing the [SPEC ANA] key when in Rx TEST mode.

The !FI line to the DSP pin 55, is an output from the gate array that indicates that the previous byte written to RAM IC64 through IC59, IC60 and IC61, has been stored and a new byte can be written. Monitoring this line at test point TP29 will show random negative pulses when in oscilloscope or spectrum analyzer mode. When in sequential tones decode mode the line will be permanently high except during the reception of tones.

The !FO line to the gate array pin 63, is an output from the DSP which instructs the gate array to start the time base generator. The action of this line is best seen when in oscilloscope mode with the Service Monitor time base set 50 µs/division.

Oscilloscope/analyzer ADC

The oscilloscope and spectrum analyzer traces are produced as graphics from DSP IC56. The amplitude level of the analogue signal to be displayed is converted to data using the fast analogue to digital converter IC66.

The analogue signal can be the AF input signal, the Tx TEST mode demodulated signal, or the output from the spectrum analyzer log amplifier. The routeing switches controlling the signal selection are described later under 'AF log amplifier selection'. The selected signal is fed to the ADC through R113, to VIN, pin 1.

The sampling rate is derived from the time-base generator in the gate array IC55, which is controlled by the microprocessor. The sampling signal is provided on the 'ADC_WR' line from pin 47 of IC55.

This is fed to WR on the ADC, IC66, pin 6, and to the clock input of latch IC65, pin 11. It is also fed through inverter IC17(e) to provide an interrupt for the DSP on IRQ0, pin 54. This can be monitored on TP27. The digital values of the samples are held in the latch before being read by the DSP.

Fractional-N driver

The frequencies of the Fractional N 1st local oscillator and of the RF generator Fractional N oscillator are set by data from the microprocessor and fed to the RF tray from buffer IC47.

When in Tx TEST, Rx TEST or Dx TEST mode, the frequency of each of these oscillators is determined by the frequencies set for the transmitter and receiver under test. The control data is produced by the microprocessor, and routed through the gate array IC55, to the buffer, then through PLN to the RF tray, and to the control data register of each oscillator.

When in spectrum analyzer mode the RF sweep is produced by a progressive change to the frequency of the 1st local oscillator, while the tracking generator sweep is produced by a progressive change to the RF generator oscillator.

Data relating to the start and stop frequencies of the sweeps is supplied by the microprocessor to DSP IC56, which then produces spot frequency data for each step of the sweep. The data from the DSP is fed through latch IC62, to the buffer IC47.

PAL IC68 decodes address information to route the data to the appropriate Fractional N register. The address of the register is written first. This is written on the rising edge of !SIMAL/!DUPAL. Then the data is written on the rising edge of !SIMWR/!DUPWR.

LCD contrast

The viewing contrast of the liquid crystal display is dependant on the voltage at the VLCO connection with respect to the VSS connection. Minimum contrast is obtained with –19.258 V on VLCO and maximum contrast at –4.208 V. To obtain this voltage range, a 20 V negative supply is produced by the diode pump formed around IC73(a), TR21, TR22 and the associated components. This runs at 50 kHz, and the –20 V output can be monitored at test point TP24.

The contrast is adjusted from the HELP/SETUP screen, and the data produced as a result of this is sent to dual digital to analogue converter IC69. The contrast data is used to produce a voltage on the 'A' output of the ADC, which will have a possible range of 0 V to –5 V.

Op-amp IC74 is configured to convert this voltage swing to the greater range required by the LCD. It is powered from the +5 V rail and from the –20 V supply from the diode pump circuit.

The equation met by the converter is:-

$$\text{Contrast voltage} = -19.258 - 3.01 \times (\text{voltage at TP22})$$

LCD backlight

The illumination of the LCD is provided by a cold cathode tube and the brightness of the tube is dependant on the supply voltage to it. .The supply is provided from a converter which requires a 24 V input for full output, generated using the +12 V and –12 V supplies

The LCD backlight brightness control circuit provides four different output voltages at PLR1 and PLR2, to feed the converter, thereby giving four different levels of illumination. An OFF state is also provided.

Data relating to the required illumination state is latched into the D4, D5 and D6 of IC70. The outputs from Q4, Q5 and Q6 of this latch control the state of transistors TR23, TR24 and TR25 through op-comparators IC73(b), IC73(c) and IC73(d). Resistors R126, R127 and R128 are switched in series with the –12 V supply in various combinations, to provide different levels of illumination as shown in Table 1-7.

Table 1-7 LCD backlight level control

Output from IC70	TR23 state	TR24 state	TR25 state	Brightness level
x000xxxx	OFF	OFF	OFF	OFF
x001xxxx	OFF	OFF	ON	1 (Dim)
x010xxxx	OFF	ON	OFF	2 (Low medium)
x011xxxx	OFF	ON	ON	3 (High medium)
x100xxxx	ON	OFF	OFF	4 (Full)

Video bandwidth filters

There are four video bandwidth filters provided for the spectrum analyzer trace. These are RC filters provided by R234 with C122, C123, C124 or C125. The appropriate capacitor is switched into circuit by the transistor associated with it. Transistors TR26, TR27, TR28 or TR29 are turned on when Q3, Q2, Q1 or Q0 of IC40 are high, because of data latched into it from the microprocessor through data buffer IC21. The user can choose to have the optimum filter to match the current settings of the spectrum analyzer set automatically, or select no video filtering.

Table 1-8 below shows the filters selected by the outputs from IC40, and the components active for each.

Table 1-8 Spectrum analyzer video bandwidth filter selection

Output from IC40	Transistor in ON state	Capacitor selected	Filter cut-off frequency	Filter resolution bandwidth
xxxx0000	None	None	-	-
xxxx0001	TR29	C125	96 Hz	300 Hz
xxxx0010	TR28	C124	660 Hz	3 kHz
xxxx0100	TR27	C123	3 kHz	30 kHz
xxxx1000	TR26	C122	19.8 kHz	300 kHz

Spectrum analyzer shifting circuit

The spectrum analyzer display has two vertical scales, 10 dB/division and 2 dB/division.

The 80 dB range displayed on the 10 dB/division scale, matches the dynamic range of the log amplifier. The log amp input at PLT passes through the filters and the op-amp IC72(c) to give an overall gain of 1. When 10 dB/division scale is selected switch IC71(b) is open. This provides a gain of 1 through IC72(d). The 80 dB range represents a voltage range of 0 to 5 V at PLT and at the output of IC72(d).

When the 2 dB division scale is selected, switch IC71(b) is closed, thereby shorting R134, and causing the gain of IC72(d) to increase to 3.33. A scaling factor of 1.5 is also introduced within the DSP, giving an overall display gain of 5.

Diodes D32, D33 and D34 provide over-voltage protection to keep the output of IC72(d) within the 0 to 5 V range.

The reference level of the spectrum analyzer display is changed by adding a DC offset to the signal before applying it to the analogue to digital converter. The offset voltage is produced from the B output of digital to analog converter IC69 and has a range of from 0 V to −5 V. It can be monitored at test point TP23. The offset is fed into the inverting input of IC72(c), which adds it to the output from the log amplifier. The scale adjustments are produced by the software to coincide with the applied offset.

Digital signal processor signal input selection

The graphic traces for the spectrum analyzer and oscilloscope displays are produced by digital signal processor IC56. The digital input signal to the DSP is obtained from the oscilloscope analyzer ADC IC66 as described earlier.

Selection between the output from the log amplifier for the spectrum analyzer or the AF/demodulation signal for the oscilloscope, is made using two analogue switches, IC71(a) and IC71(d). The selected signal can be monitored on test point TP21. IC71(c) switches the oscilloscope input coupling from AC to DC.

The four sections of analogue switch IC71 are controlled by data latched into IC70-Q0, Q1, Q2 and Q3.

Table 1-9 below shows the valid settings of IC71, and the selections which are produced from them.

Table 1-9 Oscilloscope and spectrum analyzer signal routeing

Output from IC70	State of IC71(a)	State of IC71(b)	State of IC71(c)	State of IC71(d)	Selection
xxxx1111	Open	Open	Open	Open	Nothing selected
xxxx1110	Closed	Open	Open	Open	Spectrum analyzer (×1)
xxxx1100	Closed	Closed	Open	Open	Spectrum analyzer (×5)
xxxx0011	Open	Open	Closed	Closed	Oscilloscope (DC coupled †)
xxxx0111	Open	Open	Open	Closed	Oscilloscope (AC coupled †)

† The oscilloscope coupling capacitor C49, provides AC or DC coupling into the display ADC. AC coupling is requied when DTMF and DCS tones decoding is being carried out the by the DSP.

Supply voltages

The +5 V, –12 V and +12 V supplies required for the board is routed from the power supply module through PLS. Each supply is given additional filtering to provide a clean supply where required.

Voltage regulator, 5 Volt

Voltage regulator IC80 provides a noise-free 5 V supply from the +12 V supply. This provides the clean supply for the TCXO or OCXO 10 MHz crystal oscillator.

RF generator

Fig. 1-8 below, is a complete block diagram of the RF oscillator system.

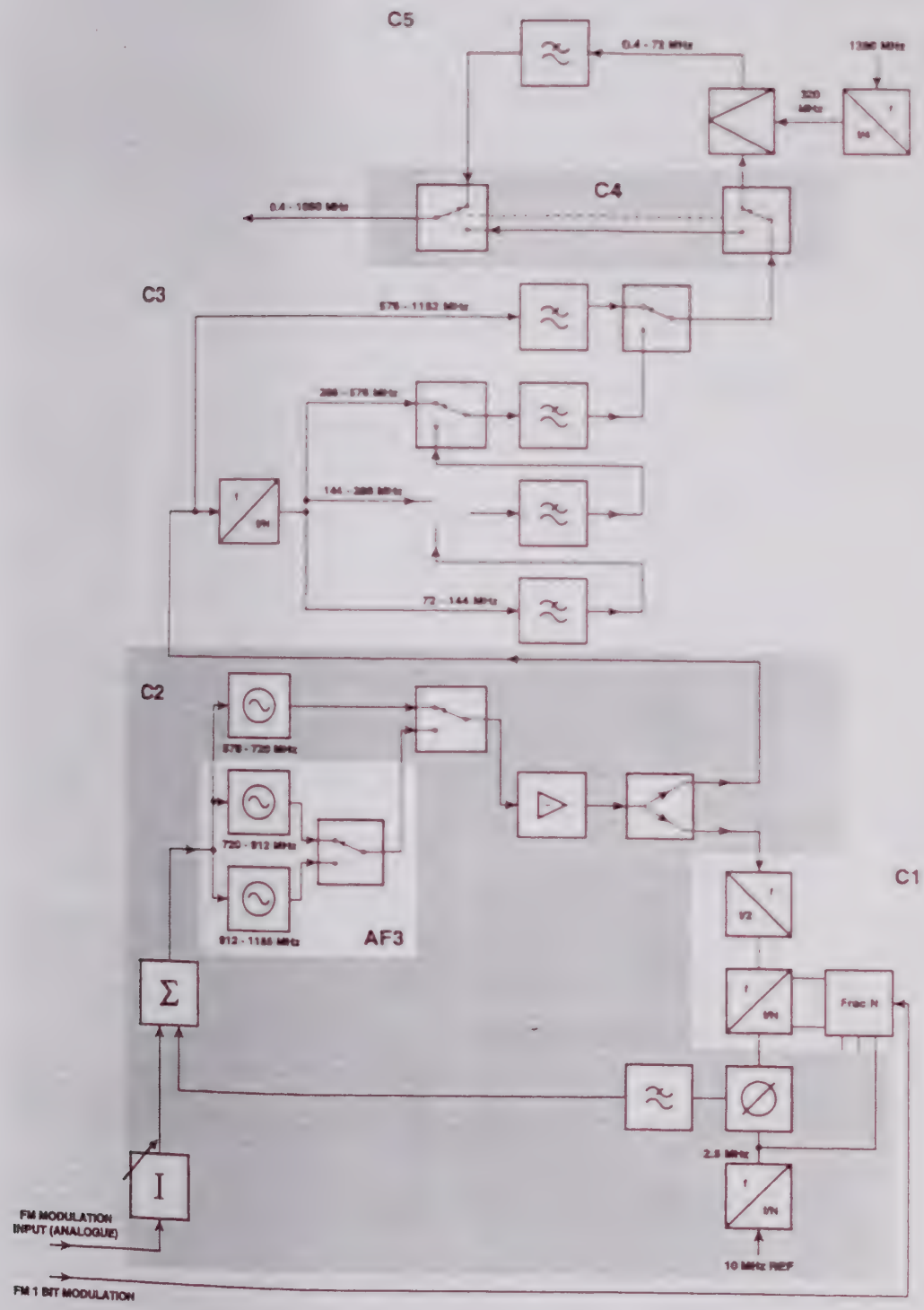

Fig. 1-8 Detailed block diagram of RF oscillator system.

C1 RF generator control (44830/113)

The RF generator controller board works in conjunction with the RF oscillator board. The oscillator board contains the phase detector, loop filter, 3 voltage-controlled oscillators and AC FM parts of a fractional N frequency synthesizer. This board also contains the prescaler, programnmable divider and DC FM parts.

The fractional N controller (IC9) is itself controlled from the microprocessor board (B2/1). IC9's register addresses are latched into IC6 and applied to the controller's address lines (A0 - A5 & CS), and then the data for that register is put on the data bus (D0 - D7) and the write line pulsed low.

Prescaler

The output from the selected VCO on C2 is buffered by a 8 dB attenuator (R1, R2, R3) and RF amplifier (IC1). IC2 then divides the VCO frequency range by 2 to that of the programmable divider (IC7). IC3 buffers and amplifies the prescaler output.

Programmable divider

IC10 is a low phase-noise programmable divider. The basic division ratio is controlled by inputs IM0 - IM8. The basic division ratio is the binary number appearing on these inputs plus one, all multiplied by eight.

In addition to the nine IM control inputs there are three others : IA0 - IA2. To calculate the actual division ratio, the binary number present on these IA inputs is added to the basic division ratio calculated from the number present on the IM inputs. This gives a maiximum division ratio of (511+1) x 8 + 7 = 4103. The IA inputs can only be used to modify basic division ratios of 56 or greater.

The outputs from this divider are complementary ECL level signals. Both edges of the output are active (only one edge could have been used, and this would have doubled the division ratio). Using both edges of the divider output means that there are no redundant edges to interfere with operation of other parts of the circuit (in paticular the phase detector, on board C2).

TR2 - TR4 convert the ECL level divider output to TTL levels. IC12(a) produces a short high pulse on each edge of the divider output. These pulses are used to clock the phase detector on board (C2) directly, with the rising edges, and inverted by IC9(c) to clock the controller (IC7). The controller IC is thus clocked one gate delay after the edge has been sent out to clock the phase detector, and this reduces the possibility of problems due to activity inside the controller IC dirtying the edge clocking the phase detector.

Resistors R46 - R50 are required for low phase-noise opeation. The controller inputs are TTL compatible and when driven from CMOS levels, draw some current in the high state. The resistors reduce these currents to acceptable levels.

DC FM (1-bit A-D convertor)

The VCO output is frequency modulated in two ways : directly through the VCO control line on the RF oscillator board (which is dominant at high modulation frequencies), and by modulating the division ratio (which is dominant for low modulation frequencies - DC FM).

The 1-bit analogue to digital converter produces a stream of bits whose average duty cycle is proportional to the voltage on the DC FM input (PLB). IC4 does the conversion, and TR1 and IC5(a) latch the data into the controller. IC11 is used to generate an accurate supply voltage for IC5 therebye rendering the DC FM path inherently accurate enough not to require calibration. The controller, when programmed to do so, uses this stream of bits to modify the programmable divider's division ratio and so vary the VCO's output frequency.

C2 RF oscillator (44830/104)

The primary function of board C2 and its daughter board AF3 is to generate a signal in the frequency range 576 to 1152 MHz that can be frequency modulated. This is then divided on C3 and mixed on C5 to give frequencies below 576 MHz.

To maintain signal purity and low phase noise, local regulation, line cleaning, power supply decoupling, on board screening and component selection techniques are employed.

Oscillators

The frequency range 576 MHz to 1152 MHz is covered by three VCOs. The 'low' oscillator is on C2 and the 'medium' and 'high' oscillators are on the daughter board AF3. This plugs into board C2 and is held between the on board screens. Each VCO is in the fractional N loop control of board C1. The required VCO is selected from signals LOW (L), MED (L) and HIGH (L) which are decoded on board C6. The logic low switches -12 V through IC9 to power the oscillator and bias the relevant diode (D10 on C2) to switch RF to the junction of R48 and R49.

The three oscillator circuits are similar, each comprising a common emitter Hartley circuit with a varactor diode forming part of the capacitive coupling between the inductors. Oscillator ranges are as follows :-

LOW	576 MHz to 719.999999 MHz
MED	720 MHz to 911.999999 MHz
HIGH	912 MHz to 1152 MHz.

The signal from the appropriate oscillator is fed to the common base amplifier TR13 before passing to C3 through amplifier IC7 at a level of typically +8 dBm. TR14 and IC8 amplify the oscillator signal and resistors R81, R82 and R83 match the feed into C1 at a typical level of 0 dBm.

2.5 MHz reference frequency

The 10 MHz signal generated on board B2/1 is amplified in TR20 before division by 4 in IC20(a) and (b). The output of IC20(b) pin 9 feeds the phase detector and is converted from a 1:1 mark/space ratio clock into a 45nS pulse through R129, C124 and IC21(c). The rising edge of IC20(b) pin 9 and the pulse are coincident.

Low level spurii can occur as a result of interference between signals at 2.5 MHz on boards C1 and C2. IC21(a) provides further isolation on the 2.5 MHz clock that is used on board C1 for low frequency modulation. Removing SKE will not affect phase locking.

Phase detector

The phase detector generates a voltage at PLJ pin 1 which determines the signal frequency of the selected VCO. This signal frequency is divided on C1 and fed back to the phase detector which compares the phase of this divided signal with that of the 2.5 MHz reference. The phase error modifies the voltage at PLJ to maintain phase locking of the VCO and the 10 MHz reference.

TR11 and D8 form a voltage clamp to prevent the voltage falling below +1 V to avoid forward bias on the varactor diodes and maintain oscillations.

Signals at TP4 and TP5 are antiphase square waves which cause TR3 and TR8 to conduct alternately. When TR3 switches on, TR4 and TR5 switch off, TR6 and TR7 switch on and current flows into C18. Similarly when TR8 is switched on, TR6 and TR7 are held off, TR4 and TR5 are on, and current flows into C17. The ratio of these charges varies as the mark-space ratio of IC5(a) and IC5(b) outputs varies. TR5 and TR6 collector voltages are applied to TR9 and TR10 whose common collector voltage controls the selected VCO frequency. When the fractional N control loop is phase locked the voltage at PLJ pin 1 holds the VCO frequency. If an imbalance occurs, the charges will differ and the voltage will change, moving the VCO frequency towards lock again.

The filters in the collector circuits of TR5 and TR6 remove the fractional sidebands outside the loop bandwidth and also the reference frequency signals which would otherwise appear on the varactor drive line and modulate the oscillator.

The loop filter bandwidth determines the locking characteristics and phase noise profile. Components R22, R26, R27, R32, R30, R31, R33 determine the operating current and components C23, C24, R37, R38 and R39 form the filter whose dynamic response depends on operating current.

When large frequency errors imbalance the phase detector transistors TR15 and TR16 conduct and reduce the time taken to re-lock the loop.

Frequency modulation (FM)

The modulation signal is generated on board B1/2 and finely adjusted over a 6 dB range and switched in 6 dB block attenuator intervals. This is routed to PLG where it varies over an 18 dB range and is translated to a continuous 66 dB range at TP9 by the switched 18 dB attenuator pads on board C2. The last 6 dB is done on board B1/2 by extending the range.

Frequency correction data is stored during a software calibration and applied to the signal on board B1/2 to compensate for variations in the VCO Voltage/Frequency characteristic. Absolute levels cannot be defined at PLG due to variations between oscillators but the maximum signal level is 2 V pk to pk.

The selection of the Fm attenuators not only depends on the Fm deviation but on the division ratio on the board C3. For instance, 100 kHz deviation on the 800 MHz output of board C2 becomes 50 kHz deviation at 400 MHz after division by 2 on board C3. The deviation on board C2 is not always the same as the requested deviation and changing the signal generator frequency can result in changes to the Fm attenuators and the signal level on PLG. The deviation on board C2 is either the same or 2, 4 or 8 times the requested deviation.

Consider a signal generator frequency of 100 MHz and a deviation of 12.5 kHz. Table 1-10 shows that 12.5 kHz is normally at the bottom of range 6. Using Table 1-11 select 6 from the second line and follow that column down to the intersection of the line that contains the required signal generator frequency. The new range, in this case 3, is the deviation on board C2 that after division gives 12.5 kHz on the signal generator output. Returning to Table 1-10 and range 3 it shows that board C2 is modulated 6 dB down range 3 at 100 kHz deviation with 12 dB block attenuation on board B1/2 and 0 dB on board C2. Reducing the Fm deviation by 25 Hz changes the range to 4 which removes 18 dB of attenuation on board B1/2, making the level on PLG approach 2 V pk to pk. The level at TP9 remains the same.

Table 1-10 Deviation ranges and FM attenuation

Range	Deviation range (kHz)			Attenuation (dB)		
				B1	C2	Total
1	400.000	to	799.999	0	0	0
2	200.000	to	399.999	6	0	6
3	100.000	to	199.999	12	0	12
4	50.000	to	99.999	0	18	18
5	25.000	to	49.999	6	18	24
6	12.500	to	24.999	12	18	30
7	6.250	to	12.499	0	36	36
8	3.125	to	6.249	6	36	42
9	1.563	to	3.124	12	36	48
10	0.781	to	1.562	0	54	54
11	0.391	to	0.780	6	54	60
12	0.195	to	0.390	12	54	66
13	0.098	to	0.194	18	54	72

Table 1-11 Set deviation ranges for differing signal generator frequencies

Signal generator frequency	Request divialton range								
	4	5	6	7	8	9	10	11	12
0.4 to 71.999999 MHz	3	4	5	6	7	8	9	10	11
72 to 143.999999 MHz	1	2	3	4	5	6	7	8	9
144 to 287.999999 MHz	2	3	4	5	6	7	8	9	10
288 to 557.999999 MHz	3	4	5	6	7	8	9	10	11
576 to 1152 MHz	4	5	6	7	8	9	10	11	12

IC16 and IC17 switch the modulation signal through to TP9 where it is combined with the loop control signal and applied to the VCO. Resistors R64, R65 and R66 give 18 dB and 36 dB levels which can be cascaded with the 18 dB formed by R69 and R70 to give 54 dB.

Power line cleaning

Any noise on the supply rails with frequency components greater than the loop bandwidth of the loop will induce phase noise on the oscillator output.

The +35 V power line is used by IC1 to derive the +26 V regulated supply for this board. The regulator adjust pin of IC1 is decoupled by C3 to improve ripple rejection. Diode D1 provides a discharge path for C4 on power-down.

Both ±12 V lines are line cleaned to provide additional protection from noise and ripple. The cleaned lines $12v_c$ are used in sensitive areas of the oscillator and phase detector.

In the +12v line cleaner the non inverting input of IC2(a) is biased through R3, D2 and R7. IC2 a) drives TR2 to set up a balance current in TR1 and R9 which applies feedback to the inverting input of IC2(a) through R5 and the long time constant R6 and C7. Any high frequency current transients on the power line are developed across R3 and applied through zener diode D2 to the non inverting input of IC2(a). IC2(a) drives the base of TR1 to compensate for the transient current change in the power supply. The -12v line cleaner works on the same principal.

Three 5 V drives are isolated through R100 and R101 and local decoupling capacitors to reduce interference.

Software control

Six control bits are decoded on the inter-connection board C6 and are shown in Table 1-12.

Table 1-12 Software control C2

Function	0/54 dB	0/36 dB	0/18 dB	HIGH	MED	LOW
Select Low VCO 576 to 719.999999 MHz	×	×		1	1	0
Select Med VCO 720 to 911.999999 MHz	×	×	×	1	0	1
Select High VCO 912 to 1152 MHz	×	×	×	0	1	1
FM attenuation = 0 dB	0	0	0	×	×	×
FM attenuation = 18 dB	0	0	1	×	×	×
FM attenuation = 36 dB	0	1	0	×	×	×
FM attenuation = 54 dB	1	1	0	×	×	×

Note: × = Don't care , 1 = logic high, 0 = logic low

C3 RF divider (44830/105)
including
AF3 Voltage controlled oscillator board (44829/853)

This board selectively filters the 576 MHz to 1152 MHz signal from the C2 board and provides frequency division, as required, under main or DSP control through the board C6. The output is fed to the board C4 and is within one of the following frequency ranges:

From	To	Divided by:-
72 MHz	143.999999 MHz	8
144 MHz	287.999999 MHz	4
288 MHz	575.999999 MHz	2
576 MHz	1152 MHz	1 (Fundamental)

This instrument does not use the divide by 16 range and the 100 MHz and 140 MHz filters. The component pads are on the board and the circuit highlights the unused components with an asterisk.

RF routeing

The main purpose of the RF routeing through the filters is to remove the harmonics that are present on the signal prior to levelling on A6/1. When the required frequency is greater than 575.999999 MHz the signal from board C2 is routed through C1, C121 and R9, into IC9 which bypasses the divider IC7.

To ensure the output of the divider is quiet and doesn't self oscillate in the absence of an RF signal the following takes place. V6 is held high which applies reverse bias to diode D1 through R5, L15, L55 and R51 to ground. V6' is held at logic 1 to switch on TR1 and TR3 which shorts the input of the divider to ground and removes the bias conditions for TR2 ensuring no RF signal is present on C105 and the following filters.

The output of IC9 is routed through either the 800 MHz (V2 low) or the 1200 MHz filter (V1 low) depending on the required frequency. When V2 is at -12 V current flows from ground through R22, L8, D10, D12, D14, L14, L12, L10, L9 and R23. Current from R19, L1 D2, D5 and D50 also flow into L9 and R23. This switches on the diodes to route the RF through the 800 MHz filter. This and V1 being at +12 V switches off diodes D6, D49, D53, D9, D11, D17, D16, and D15 to block the RF signal and diodes D7, D8, D51 and D52 are switched on to maintain a low impedance to ground for any signals that may leak through the diode self capacitance. V6 is held at +12 V and applies reverse bias to D13 to isolate the divider path still further.

If the signal frequency is changed to 80 MHz V1 and V2 are held at +12 V switching off the 800 MHz and 1200 MHz filters and V6 is taken low to enable the divider through D1 and switch on D10 and D13 with current through R22, L8, L28 and R32. V10 is switched to -12v to bias D18 on to switch the output of the divider through C105 to the input of the 100 MHz filter. V12 is at -12v which draws current through R44, L40, D48, L50, L51, D41, L37, L38, D32, L35, L36, D26, L22 and R29 to route the RF through all of the filters.

The above switching techniques are repeated for the other filters.

Control circuits

Controls from C6 enter the board through PLB to drive the decode logic in IC2 and the 4 to 16 line decoder IC3. These ICs control the state of a series of control signals, i.e. S1 and S0 for setting the divide factor of programmable divider IC7, and V1 to V12 for configuring the filter switch matrix.

The filter selection range determines which and how many low pass filters are switched in by the various switching diodes. As the divide factor is increased, so the number of filters increases. Thus, at the top of the range, only one is used, whereas at the bottom, four are used.

Divider and filter selection codes and main controls are summarised in Tables 1-13 and 1-14 below.

Table 1-13 Software control C3

Signal generator frequency	+2	+4	+8	not used	not used	FIL3	FIL2	FIL1
0.4 to 71.999999 MHz	0	1	1	-	-	0	1	1
72 to 99.999999 MHz	1	1	0	-	-	1	1	1
100 to 143.999999 MHz	1	1	0	-	-	1	1	0
144 to 199.999999 MHz	1	0	1	-	-	1	0	1
200 to 287.999999 MHz	1	0	1	-	-	1	0	0
288 to 399.999999 MHz	0	1	1	-	-	0	1	1
400 to 575.999999 MHz	0	1	1	-	-	0	1	0
576 to 799.999999 MHz	1	1	1	-	-	0	0	1
800 to 1152 MHz	1	1	1	-	-	0	0	0

Note: 0 = logic low, 1 = logic high X= don't care

Table 1-14 Diode switching levels

Signal generator frequency	C3 div ratio	V1	V2	V3	V4	V5	V6	V7	V8	V9	V10	V11	V12
0.4 to 71.999999 MHz	2	H	H	L	H	L	L	H	H	H	H	H	H
72 to 99.999999 MHz	8	H	H	H	H	H	L	H	H	H	L	H	L
100 to 143.999999 MHz	8	H	H	H	H	H	L	H	H	H	L	L	H
144 to 199.999999 MHz	4	H	H	H	H	H	L	L	H	L	H	H	H
200 to 287.999999 MHz	4	H	H	H	H	H	L	L	L	H	H	H	H
288 to 399.999999 MHz	2	H	H	L	H	L	L	H	H	H	H	H	H
400 to 575.999999 MHz	2	H	H	L	L	H	L	H	H	H	H	H	H
576 to 799.999999 MHz	1	H	L	H	H	H	H	H	H	H	H	H	H
800 to 1152.000000 MHz	1	L	H	H	H	H	H	H	H	H	H	H	H

Note: H = +12 V, L = -12 V

C4 Bypass board (44830/106)

This board takes the output from the signal generator board C3 and routes it to either the BFO board C5 , or directly to the RF amplifier board A6 1, bypassing the BFO circuits. When routed to the BFO board, the signal is used to produce the 400 kHz to 69.999999 MHz frequency range , which is routed back to the bypass board and then to the RF amplifier board A6 1.

The bypass path

In this path, the C3 board output is routed directly to the C4 board RF OUT port, attenuated from a nominal 0 dBm at C3 output to a nominal -16 dBm at the RF OUT port.

The bypass path starts with a 'T' switch, consisting of one element of diode package D2 and all elements of D3. This is followed by an 8 dB π attenuator pad, comprising of R8, R9 and R10. An 'L' switch, formed around D4 and the associated components, controls the output from the bypass path.

The path is selected by a +12 V DC level on the BYPASS line, PLA pin 4. This biases the series elements of D2 (through resistors R4 and 5), D3 (through R5 and 7), and D4 (through R11, R12 and R14).

The path is isolated by a –12 V DC level on the BYPASS signal. This biases the shunt elements of D3 (through R5 and 6), and D4 (through R11, R12 and R13).

The total signal loss over the bypass path is made up of the 8 dB π attenuator and a further 8 dB from the diode switches.

When in the BFO mode, the bypass path has to provide a high isolation (around 90 dB), so as to prevent any appreciable leakage of the signal generator output onto the RF OUT port.

The BFO paths

The BFO send path

This is provided by a 'T' switch, consisting of one element of diode package D2, and all elements of diode package D1.

The path is selected by a +12 V DC level on the BFO Line, PLA pin 2. This biases the D1 series element through resistors R1 and R3, and D2 series element through R3 and R4.

The path is isolated by a –12 V DC level on the BFO signal. This biases the D3 shunt elements through R2 and R3.

The BFO return path

This is provided by a 'T' switch, consisting of diodes D5, D6 and D7.

The path is selected by a +12 V DC level on the BFO line, PLA pin 2. This biases the series elements of D5 (through resistors R14 and R16), and D7 (through R16 and R17).

The path is isolated by a –12 V DC level on the BFO line. This biases the shunt element of D6 (through R15 and R16).

Note that R14 also biases D4, in the bypass path.

General notes

1. Inductors L1 and L4 prevent the DC bias networks from degrading the BFO path isolation. L2 and L3 do the same for the bypass path.

2. The BFO on PCB C5, which is used to produce the low range RF frequencies, is disabled when the Bypass board C4 is in Bypass mode.

C5 BFO board (44830/107)

The purpose of this board is to produce a 400 kHz to 71.999999 MHz output frequency range. This is done by taking the RF signal generator output within the frequency range 320.4 MHz to 391.999999 MHz , routed through the bypass board C4, and mixing it with a 320 MHz local oscillator.

Signals within the required range are extracted from the mixer output and returned to board C4 for routeing to RF amplifier board A6/1.

Mixer local oscillator source

The 320 MHz local oscillator (LO) signal is produced by dividing by four, the Service Monitor 2nd LO signal.

The 1280 MHz 2nd LO signal, from board A9/1, enters through SKA, at a nominal level of –5 dBm. This is fed to the input of 'divide by four' device, IC3, to produce 320 MHz at –1.3 dBm (typical), –3 dBm (minimum).

The output from the divider is routed to a π attenuator R3, R4 and R5 giving 1.8 dB attenuation, followed by an amplifier, comprising IC2 and its associated components.

The signal from the RF generator board C3, routed through the bypass board C4, is fed to the RF port of double balanced mixer IC1. This signal is 320 MHz above the required final output frequency.

The mixer produces the required signal frequency, together with other mixer products, at its IF port. The required frequency is extracted from the unwanted signals by the cascaded 80 MHz and 144 MHz low-pass filters.

Suppression of unwanted mixer products

The first filter is a fifth order elliptic low pass, with an 80 MHz cut-off frequency, formed by L5 and L6 with capacitors C16 to C21)

The second filter is a third order elliptic low pass, with a 144 MHz cut-off frequency, formed around L7 with C22 to C26.

The output from the filters is returned to board C4, from where it is routed to the RF amplifier board, A6/1.

+5VS rail switching

The BFO is disabled when the bypass board C4 is in the bypass mode. This is done to reduce high frequency spurii. The +5 volt supply to IC3 is a unique supply +5VS, fed from a switching transistor on the interconnecting board C6.

When in the BYPASS mode the +5VS rail is switched off, which disables the mixer by removing the 320 MHz LO signal.

When in the BFO mode the +5VS rail is switched on, and the mixer functions

C6 RF tray interconnection PCB (44830/108)

This board is the control and power supply distribution board for the 'C' tray

The upper two bits of the data bus D6 and D7 are latched into IC3 on the rising edge of DUP A1 and then decoded in IC2 to give CS1 and CS3 which enable IC3 and IC4 respectively. Data written on D0 to D7 is then latched into either IC3 or IC4 on the next rising edge of DUP WR. This method applies to board C1 which shares the same controls. The address map selected by DUP A1 is shown below.

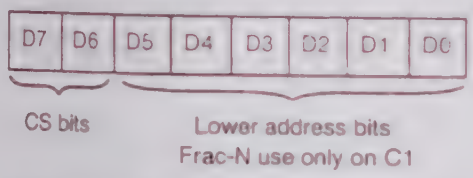

CS bits	To boards
00 = CS0 Frac-N	C1
01 = CS1 Oscillator select	C2
10 = CS2 Frac-N	C1
11 = CS3 Divider select	C3, C4 and C5

The value of R7 is set so that the supply current to IC5 and its load current switches TR1 when flowing in R5 or TR2 in R6. The supply current in either R5 or R6 cannot switch the transistors. Current flows in both directions in the BYPASS line depending on the state of the BFO.L BYPASS.H output from IC4.

IC6 operates in a similar manner to IC5 but in anti-phase.

B3/1 Analogue systems card (44830/181)

The Analogue Systems Card allows the Service Monitor to test the TACS, AMPS and NMT cellular systems and the MPT1327 (BAND III) and EDACS trunking systems. It is based on the

68000 microprocessor and connects to the PLE connector on the B2/1 board to communicate with the main 80C188 processor of the Service Monitor. The necessary signalling is achieved using three DSPs - one for generation and two for reception. The 68000 communicates with the DSPs through a gate array. The analogue interface is performed by a dual 18-bit CD DAC on the generation side, and a 12-bit ADC on the reception side.

Board replacement

Replacing this board with a substitute board will not affect the calibration of the Service Monitor.

Microprocessor (sheet 1)

The 68000 microprocessor, IC13, has a 16-bit external data bus and a 23-bit external address bus. The processor accesses external devices using a Read/ Write(L) (R/W(L)) line, a Lower Data Select(L) (LDS(L)) and an Upper Data Select(L)(UDS(L)). LDS(L) is used to access D0 to D7 and UDS(L) is used for D8 to D15. To access all 16 bits together, both LDS(L) and UDS(L) are pulled active simultaneously. Because of this, the address lines are labelled A1 to A23 (no A0). The memory uses all 16-bits but all other peripherals are 8-bits (D0 to D7).

The memory provided on the board is 1M byte of EPROM (two 27C040s, IC16 and IC17) and 256k bytes of RAM (two 628128s, IC20 and IC21). This is expandable to 4M bytes of EPROM and 1M byte of RAM. To retain data during power-off, the RAMs are powered by an external battery, which is connected through PLL. The full memory map is shown below (the address is specified in bytes).

Address	Description	IC number
000000H to 0FFFFFH	EPROM (27C040)	IC16 & 17
100000H to 1FFFFFH	EPROM (27C040) spare	IC18 & 19
420000H to 43FFFFH	RAM (628128)	IC20 & 21
700000H to 73FFFFH	B2/1 bridge data	IC2 & 5
740000H to 77FFFFH (read)	B2/1 bridge status	IC8
740000H to 77FFFFH (write)	ROM size latch & analogue select	IC12
780000H to 7BFFFFH	Gate array - DSP bridges	IC22

The address decoding is done in a PAL, IC14. In order to allow different size EPROMs, a 2-bit code is written to the ROM size latch, IC12, pins 16 and 19. This code is used by the PAL to generate the appropriate address decoding. The codes are shown below.

IC12		EPROM		IC16 & IC17	IC18 & IC19
Pin 19	Pin 16	Type	Size	Address	Address
0	0	27C020	256 k bytes	000000H to 07FFFFH	080000H to 0FFFFFH
0	1	27C040	512 k bytes	000000H to 0FFFFFH	100000H to 1FFFFFH
1	0	27C080	1 M bytes	000000H to 1FFFFFH	200000H to 3FFFFFH

B2/1 bridge (sheet 1)

There is a two-way data communications bridge between the B3/1 and the B2/1 board. The link is between PLA on the B3/1 board and PLE on the B2/1 board. The bridge consists of IC1 to IC8 and IC33 to IC35.

Data from B3/1 to B2/1 is written by the 68000 to address 700000H, IC5. At the same time, a logic high is latched onto IC6 pin 8, which switches TR3 on and generates an interrupt (CELL INT(L) on TP6) for the B2/1 board. When the 80C188 on the B2/1 board reads the data from IC5, IC6 pin 8 is cleared and CELL INT(L) returns high. The status of the interrupt line is passed through IC7(a) and is buffered by IC8. This allows the 68000 to read IC8 (address 740000H) and only write new data to IC5 once the previous data has been read.

If a quick response from the B2/1 board is required, the 68000 can generate a NMI(L) interrupt (TP5) instead of a CELL INT(L). This is done by writing to address 700001H instead of 700000H. This still writes to IC5 but a logic high is latched onto IC6 pin 5 which turns TR2 on.

Data from B2/1 to B3/1 is written by the 80C188 on B2/1 to IC2. On doing so, a logic low is latched onto IC3 pin 6 (TP3) which is an interrupt input to the 68000. The data can then be read by the 68000 by reading address 700000H. This sets IC3 pin 6 back high clearing the interrupt. The status of this interrupt is fed to IC8 and can thus also be read by the 68000 by reading address 740000H. The interrupt line is also fed back to the B2/1 board as CELL BUSY(L) so that the 80C188 on the B2/1 board will not write another byte until the present one has been read by the 68000.

Reset and clock (sheet 1)

The reset line for the B3/1 board is controlled by the B2/1 board. At power-on, the B3/1 RESET(L) line (TP1) is set low (active) using IC35(a). This holds the 68000, the gate array and the DSPs in reset. In order to release the reset line, the 80C188 on the B2/1 board writes a high to its I/O address E101H. This can be used to hold the B3/1 board in reset if it is not being used.

The master clock for the B3/1 board is 10 MHz and this is provided by the crystal module, X1. It can be monitored on TP2.

Interrupt disable (sheet 1)

The 80C188 on the B2/1 board has the ability to disable interrupts from the B3/1 board. This is done by writing to E101H with D0 set. This clears IC35 pin 8, which gates out the interrupts using IC33(b) and IC33(c).

B2/1 Address	Description
E000H	Data read/write to B3/1 bridge
E001H	D7 - 0 = reset B3/1 board, 1 = release reset
	D0 - 0 = enable bridge interrupt, 1 = disable interrupt

DSP controller gate array (sheet 2)

The DSP controller is programmed into an ACTEL 1020 gate array IC22. This contains eight internal registers which provides the processor interface to the three DSPs, IC23, IC24 and IC25. The internal registers are located at 68000 addresses 780000H to 780007H.

On the DSP side of the gate array, all the data lines, address lines, and control lines for the three DSPs are connected together onto a common bus, which is fed into the gate array. In order to prevent contentions on the bus, the gate array controls the bus request (BR(L)) line for each DSP. The gate array gives each DSP a time slot to use the bus, by pulling its BR(L) line low. The other two DSPs will be tri-stated. Once that time slot is over, the gate array pulls that BR(L) line high and then pulls the BR(L) line for the next DSP low. Because the DSPs run from internal memory, only external accesses such as reading or writing to the 68000 bridge inside the gate array will be slowed down by this arbitration.

D to A converter and oversampling filter (sheet 3)

The B3/1 board provides 2 analogue outputs - MOD OUT (PLB) and AF OUT (PLC). MOD OUT is used to modulate the carrier generated by the Service Monitor, and AF OUT is fed to the Service Monitor so that it can make measurements on the signal, and feed the results back to the B3/1 board. MOD OUT and AF OUT can be monitored on TP24 and TP25 respectively. These 2

outputs are provided by the oversampling filter, IC26, and the CD DAC, IC30. The oversampling filter is driven by a serial link that provides 2 sets of 16-bit data, one for each channel. The MOD OUT is the left channel and the AF OUT is the right channel. The oversampling filter is a 4 times oversampling filter that provides 18 bits to the CD DAC, IC30. This is done to raise the sampling rate, so that there is a large frequency gap between the highest frequency required and the sampling frequency. The filters on the output, IC31, can then have gentle cut-off rates and hence be simple in design.

The sampling rate before the 4 times oversampling filter) is 52.0833 kHz.

RF switching (sheet 3)

The MOD OUT connector PLB, also provides the output lines, from latch IC12, which are controlled by the 68000. PLB pin 4 is connected to PLR pin 4 on the B1/2 audio processor board. Its purpose is to disable and enable the RF output from the Service Monitor. This facility is used by some, of the SYSTEM test options. Pins 5 and 6 of PLB are not used.

Interface between DSPs and DAC (sheet 2)

The serial link to the oversampling filter consists of 3 lines - S OUT (serial data), BCK (clock to latch data in) and LRC (left/right channel indicator). These 3 signals come from the gate array, IC22, and can be monitored on TP15, TP14 (this is actually the inversion of BCK) and TP16 respectively. TP16 should be a 52.0833 kHz square wave and TP14 should be a 3.333 MHz wave consisting of 200 ns high then 100 ns low. DSPs IC23 and IC25 both have access to the DAC and each of their serial links (pins 52, 53 and 56) are fed into the gate array. From these, the gate array generates the 3 lines S OUT, BCK and LRC. The serial data from the 2 DSPs are multiplexed within the gate array onto S OUT and, under control from the 68000, data from either of the 2 DSPs can be selected for the left and right channels. For example, IC23 may use the left channel (MOD) but IC25 may use the right channel (AF).

A to D converter (sheet 3)

The demodulated carrier or the signal from the AF IN socket on the Service Monitor is fed to the DEMOD/AF IN connector (PLD) on the B3/1 board. This input is prevented from exceeding +/-5V using D3, D4 and R53. The signal is then fed to an analogue multiplexer, IC32, together with the MOD OUT, AF OUT, SPARE1 IN (PLF) and SPARE2 IN (PLG) signals. Using S0 to S2 from IC12 on sheet 1, the 68000 can select which of these signals is fed to the output of the muliplexer, pin 3. In normal operation, the DEMOD/AF signal is fed to the output. This output can be monitored on TP23. The signal is then passed through an anti-aliasing filter built around IC29(a). The output from this is fed into the input of the A to D converter, IC28, and can be monitored on TP20. The A to D converter is 12 bits and is clocked regularly by the gate array at 104.166 kHz. This rate is exactly twice that of the D to A sample rate. This allows signals to be sampled by the ADC, filtered by one or more DSPs, and then fed out to the DAC. This is done when either of the psophometric filters are used.

Interface between DSPs and ADC (sheet 2)

The ADC connects directly to the gate array, IC22, through 3 lines, S IN CLK, S IN DATA and CONVST(L). S IN DATA is serial data from the ADC and can be monitored on TP18. S IN CLK is the serial clock from the ADC which can be monitored on TP26. The gate array, uses these 2 signals to clock the 12-bit data from the ADC into an internal shift register to produce parallel data. This data is then available to be read by DSPs IC24 and/or IC25. CONVST(L) is the start conversion pulse from the gate array to the ADC whose frequency is 104.166 kHz. It consists of 300 ns low pulses every 9.6 us. CONVST(L) can be monitored on TP17.

-5V generator (sheet 3)

IC28, IC30, IC32, D2, D4 and D6 require a -5V supply. This voltage is not provided by the connection PLA from the microprocessor board B2/1. Therefore, a -5V regulator, IC27, is used to provide the voltage from the -12V supply.

Carrier detect (sheet 3)

The receive DSP, IC24, takes the demodulated signal from the ADC and decodes it to extract data. However, if the carrier is not present, the demodulated signal will be noise and this can sometimes be decoded by IC24 as false data. To prevent this, a carrier detect circuit is used. This takes the log amp signal from the Service Monitor at PLE and passes it to a comparator, IC29(b). This comparator provides a logic 1 when a carrier is present and a logic 0 when there is no carrier. This logic line is fed to the FLAG IN line, pin 55, on IC24. The DSP can then monitor this line and only decode signals when this line is at logic 1.

The output from IC29(b), pin 7, will switch to logic 1 when PLE pin 2 rises above 3.8V and will switch to logic 0 when PLE pin 2 falls below 2.7V. This can be monitored on PLJ pin 2.

Connectors PLJ (sheet 2) and PLK (sheet 1)

These connectors are for test and debugging purposes only

B4 600 Ω audio input/output interface (44829/972)

This board contains the 600 Ω AF interface hardware. It provides the following AF input and output options:-

AF input impedance	High (1 MΩ nominal)
	600 Ω balanced.
AF output impedance	Low (5 Ω nominal).
	600 Ω balanced.
20 dB output attenuator	In
	Out.

Function

Signals to the AF GEN OUT socket on the front panel and from the AF INPUT socket, also on the front panel, are routed through it.

The operator sets the required operating conditions from a set-up menu, which causes the appropriate TTL control voltages to be produced on the audio processor board B1/2. These are routed to this board through PLB pins 6, 7 and 8.

The TTL control voltages are applied to the inputs of the x4 Darlington drivers, which in turn operate the switching relays RLA to RLE.

Any combinations of input impedance, output impedance and output attenuation can be selected.

The presence of this board in the Service Monitor is made known to the software by the detection of a chassis (0 V) connection on PLB pin 10.

600 Ω balanced input

When the 600 Ω balanced input is selected, RLA and RLB are energised, switching RLA (a), RLA (b) and RLB (b).

The signal from AF INPUT on the front panel, is applied across the primary of T1. The screened conductor, which is grounded to the Service Monitor chassis when the input impedance is set to High, is isolated.

The AF input to audio processor board B1/2, is obtained from the secondary of T1.

600 W balanced output

When the 600 Ω balanced output is selected, RLC and RLD are energised, switching RLC (a), RLD (a) and RLD (b).

The signal from AF generator output on the audio processor board B1/2, is applied across the primary of T2.

The AF output to the AF GEN OUT socket on the front panel, is obtained from the secondary of T2. The screened conductor, which is grounded to the Service Monitor chassis when the output impedance is se to Low, is isolated.

20 dB output attenuator

When the 20 dB output attenuator is selected, RLE is energised, switching RLE (a) and RLE (b). This connects the potential divider, R3 and R4, across the AF output from the audio processor board B1/2. The junction of R3 and R4 provides the attenuated signal output which is routed directly to the AF GEN OUT socket on the front panel or to the input of T2.

B7 GPIB interface (44829/991)

The GPIB (General Purpose Interface Bus) unit B7, is used to allow external devices to remotely control the Service Monitor.

The hardware for this is fitted to the rear of the Service Monitor next to the fan. It has a 24-way connector, specifically designed to accept GPIB connectors.

Interface to B2/1 board

The interface to the main processor board in the B2/1 in the Service Monitor, is made through PLA on B7 which is connected to PLG on B2/1. This provides the following:

Label	PLA pin number	Description
D0 to D7	15 to 22	Bi-directional data lines
BA0 to BA2	24 to 26	Address lines
BWR(L)	12	Write line
BRD(L)	13	Read line
GPIBCS(L)	11	Chip select
GPIB FITTED(L)	10	GPIB option fitted line
CENT FITTED(L)	9	Not relevant to this instrument
RESET	7	Master reset from B2/1
GPIB INT	6	Interrupt line to B2/1
5MHz	5	Clock from B2/1

The GPIB FITTED(L) and CENT FITTED(L) lines from this board are read by the 80C188 on the microprocessor board B2/1, to determine that the GPIB unit is present. On B2/1, both of these lines are pulled high through resistors so that the line is high if nothing is connected to it. On this board, (B7) the GPIB FITTED(L) line is pulled to ground but the CENT FITTED(L) line is left open circuit. This indicates the presence of the B7 board.

GPIB controller

The GPIB interface functions are all performed by the GPIB controller, IC3. It provides eight read and eight write registers which are accessed by the microprocessor board B2/1, using D0 to D7, BA0 to BA2, BWR(L), BRD(L) and GPIBCS(L).

The controller is reset on power up using the master reset line (PLA pin 7) from the microprocessor board. This line is high for approximately 300 ms, immediately after power up.

The controller requires a clock input in the range 1 MHz to 8 MHz and this is provided by the 5 MHz line from the microprocessor board.

Interface to GPIB

The interface between the GPIB unit and the external controlling device is made through the 24-way GPIB connector, SKA. This provides the following:

Label	SKA pin number	Description
D0 to D7	1 to 4, 13 to 16	Bi-directional data lines
ATN(L)	11	Attention control line
EOI(L)	5	End of identify
SRQ(L)	10	Service request
REN(L)	17	Remote enable
IFC(L)	9	Interface clear
DAV(L)	6	Data valid
NDAC(L)	8	Data accepted
NRFD(L)	7	Ready for data

Data is transferred between the interface and the external controlling device using the data lines D0 to D7 and the handshaking lines DAV(L), NDAC(L) and NRFD(L). The other five lines are bi-directional control lines.

The 16 lines above, are interfaced to the GPIB controller, IC3, using two TTL to GPIB transceivers, IC2 and IC3. These transceivers are controlled using the T/R1, T/R2 and T/R3 lines on IC3 pins 1, pin 2 and pin 5 respectively.

B12 Memory card and date/time clock (44830114)

This board provides a real time clock and a memory card interface to the Service Monitor

Interface to B2/1 board

The interface to the main Service Monitor processor board, B2/1, is made through PLA on B12. This is connected to PLE on B2/1, and provides the following:

Label	PLA pin No.	Description
D0 to D7	12 to 19	Bi-directional data lines
BA0 to BA1	2 and 3	Address lines
BWR(L)	9	Write line
BRD(L)	10	Read line
CPAGECS(L)	5	Chip select for memory card & clock addresses
CARDCS(L)	6	Chip select for memory card & clock data
RES(L)	7	Master reset
CARD FITTED(L)	8	Memory card interface / clock fitted line

Address decoding

In order to read or write data in the memory card, the address must be set up on the three latches IC2, IC3 and IC4. These latches provide A0 to A22 and REG(L). The REG(L) line is used to access additional attribute data stored in the memory card (this is information such as card size, RAM or ROM, etc.).

Similarly, in order to read or write data in the real time clock, the address of the appropriate register must be set up. This is done by latching the data lines on the falling edge of the AS line (IC9 pin 14).

The corresponding address decoding is achieved using IC1(a). IC1(a) is operated off CPAGECS(L) and BWR(L) and provides the following decoded lines:

Label	Address	Description
1Y0(L)	CPAGECS(L)+0	Write card addresses A0 to A7 (IC4)
1Y1(L)	CPAGECS(L)+1	Write card addresses A8 to A15 (IC3)
1Y2(L)	CPAGECS(L)+2	Write card addresses A16 to A22 & REG(L) (IC2)
1Y3(L)	CPAGECS(L)+3	Write clock register address (IC9)

Reading or writing data in the memory card is done by reading or writing to address CARDCS(L). Data is then buffered through IC5 to or from the memory card.

Reading or writing data in the real time clock is done by reading or writing to address CARDCS(L)+3.

This address decoding is achieved using IC1(b). IC1(b) is operated off CARDCS(L) and provides the following decoded lines:

Label	Address	Description
2Y0(L)	CARDCS(L)+0	Read / write data on memory card
2Y1(L)	CARDCS(L)+1	not used
2Y2(L)	CARDCS(L)+2	not used
2Y3(L)	CARDCS(L)+3	Read / write data in real time clock

Interface to memory card

Connection to the memory card is made by PLB. This provides the following signals:

Label	PLB pin No	Description
A0 to A25	See below ‡	Address lines (A23 to A25 not used)
REG(L)	61	Attribute memory select line
D0 to D15	See below ‡	Data lines (D8 to D15 not used)
RDY/BSY(L)	16	Ready/busy line (not used)
CD1(L) & CD2(L)	36 and 67	Card detect - low when the memory card is plugged in
WP(L)	33	Write protect
BVD1 & BVD2	63 and 62	Battery voltage detect
CE1(L) & CE2(L)	7 and 42	Card chip select
OE(L)	9	Data output enable
WE(L)	15	Data write enable

‡ Refer to the circuit diagram for pin connections.

CD1(L) and CD2(L) are ORed together using IC7(b) to provide output enables for the address latches and data buffer. This line is called CDPRES(L).

CDPRES(L), WP(L), BVD1 and BVD2 can be read by the microprocessor board B2/1 through one half of IC6 at address CPAGECS(L). The output enable for that half of IC6 is provided by IC7(d).

The other half of IC6 provides buffered versions of chip select, read and write. The output enable for this half of IC6 is provided by CDPRES(L).

Card Fitted line

To test if the memory card board B12 is fitted, the microprocessor board B2/1 reads the Card Fitted line (PLA pin 8) by reading address 5800H. When the board is fitted, BA0 will be low. BA0

is inverted by IC8(b) and then fed into one half of IC8(a). When the board is fitted the output of IC8(a) (CARD FITTED(L)) will be low. This indicates that the memory card board B12 is fitted.

To then test if the clock chip is fitted, the microprocessor board B2.1 reads the same line by reading address 5801H. This sets BA0 high and hence IC5(b) pin 4 low. The CARD FITTED L line is then the inverse of IC9 pin 23. If the clock chip is absent, this pin is high and CARD FITTED(L) is low, and when fitted, the pin is low and CARD FITTED(L) is high.

Memory card and real time clock presence detection	
Neither option fitted	Reads 5800H - CARD FITTED(L) = 1
B6 fitted	Reads 5800H - CARD FITTED(L) = 0
If 0,	Reads 5801H - CARD FITTED(L) = 0
B12 fitted without clock	Reads 5800H - CARD FITTED(L) = 0
If 0,	Reads 5801H - CARD FITTED(L) = 0
B12 fitted with clock	Reads 5800H - CARD FITTED(L) = 0
If 0,	Reads 5801H - CARD FITTED(L) = 1

Chapter 2
ACCESS AND LAYOUT

Contents

	Page
Mechanical layout of the service monitor	2-1
Access to boards	2-1
Routine safety testing and inspection	2-6

List of figures

Fig. 2-1 Locations of printed circuit boards. 2-2

Mechanical layout of the service monitor

Most of the active circuits of the Service Monitor are contained on multi-layer printed circuit boards which are assembled into three main sub-assemblies. It also contains sub-assemblies such as switched attenuators and the power supply module. Fig. 2-1 shows the location of the printed circuit boards and sub-assemblies.

Removing the metal case

All of the printed circuit boards used within the Service Monitor contain components which can be damaged by static electricity. Refer to the precautions at the beginning of this manual

The outer metal case of the Service Monitor must be removed to obtain access to the interior. Before doing this, disconnect all connections, including the mains connection and/or DC supply connection.

Adjust the position of the carrying handle so that it is to the top and rear of the Service Monitor.

Stand the Service Monitor face down on a firm, non-scratch surface.

Remove the six cover retaining screws holding the metal case to the Service Monitor main frame.

Slide the metal case upward until it is clear of the main frame, making allowance for the unbalancing caused by the weight of the carrying handle. Store the metal cover and the screws in a safe location until required for re-assembly.

Return the Service Monitor to the normal position, again making sure that it is laying on a smooth surface, and that there are no foreign objects underneath which may cause damage.

Access to boards and sub-assemblies

The following instructions explain how to gain access to the component side of all single sided boards, and to the topside of double sided boards. The removal of sub-assemblies such as switched attenuators and the power supply module is also explained. Dismantling further than this is not explained.

When screws and other parts have been removed, store in a safe place, and in a manner which allows identification of the correct location to refit them.

The re-assembly procedure is the reverse of the dismantling instructions, except where specifically mentioned.

It is assumed that the outer metal case has been removed.

Where boards or sub-assemblies have to be accessed from the bottom of the Service Monitor, ensure that the trays and sub-assemblies accessed from the top of the Service Monitor are secure before turning the Service Monitor over.

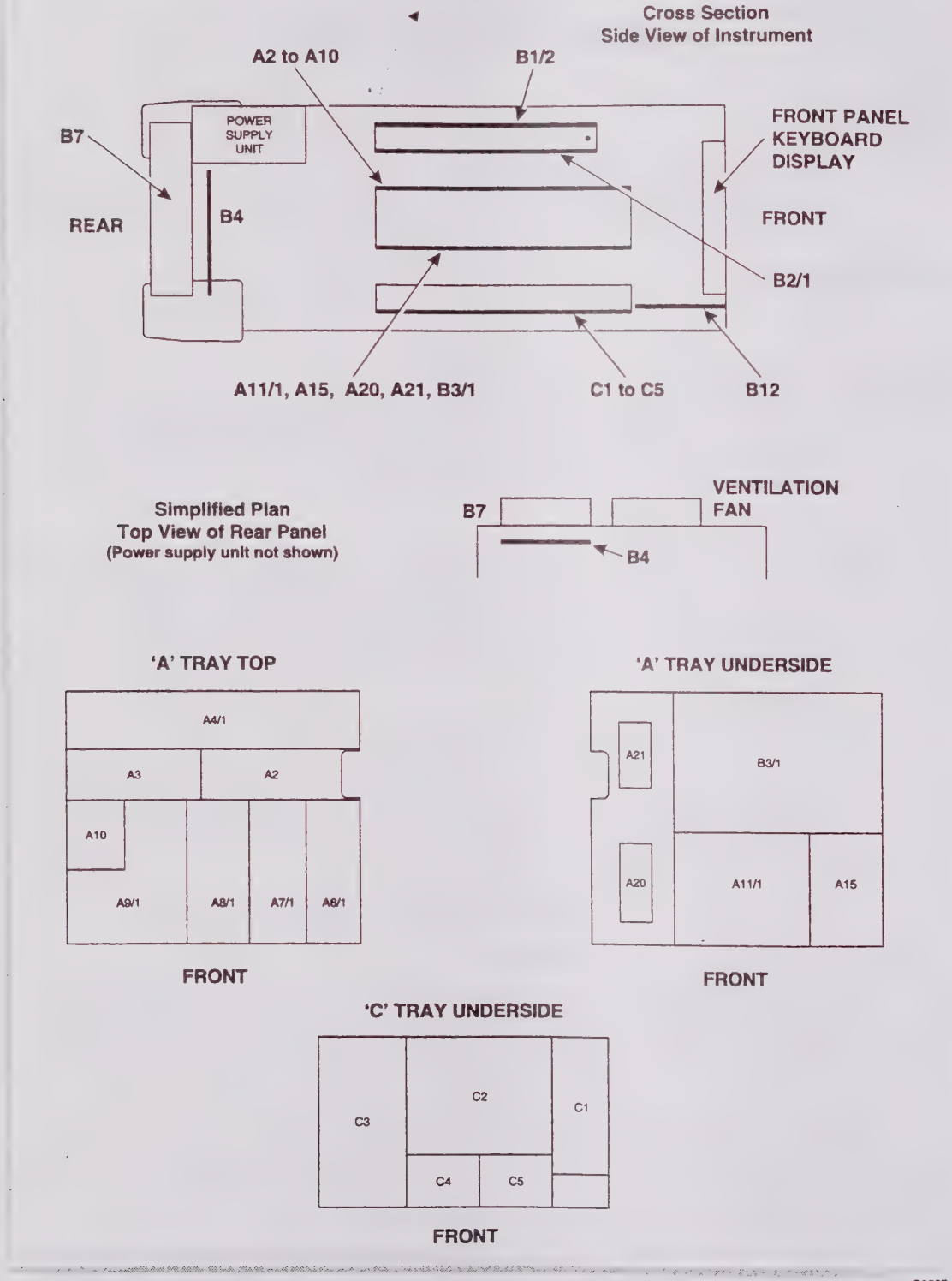

Fig. 2-1 Locations of printed circuit boards.

B1/2

The audio processor board B1/2 is accessible from the top. All test points and adjustment controls required to carry out the adjustment and calibration procedures to this board are accessible with no additional dismantling.

B2/1

The microprocessor board B2/1 is accessible from the top and is located on the underside of the tray containing B1/2. To gain access to it, remove the six tray retaining screws, (three each side), and loosen the two tray pivot screws. Carefully raise the rear of the tray until the flexible cable to the serial interface connector PLJ, and any other connections which will prevent the tray from being raised, can be disconnected. With these connections removed, the tray containing board B2/1 will become self supporting at an angle, over the front of the Service Monitor.

Power supply module

The power supply unit is accessible from the top. To remove the power supply unit, proceed as follows:-

- Disconnect the three multi-way connections to left-hand end of the unit.
- Disconnect the two multi-way connectors to the right-hand end of the unit.
- Disconnect the three single connectors to the right hand, noting the position of each. (Red to '+ve', Black to '–ve' and Green to 'E').
- Remove the six screws securing the unit to the main frame.

The unit can then be removed.

To obtain access to the PCBs within the unit, remove the four screws holding the protective cover in place, then remove the cover.

A2, A3, A4/1, A6/1, A7/1, A8/1, A9/1 and A10

These boards are all located on the top of the receiver RF tray and accessible from the top.

Access to them is achieved as follows:-

- Pivot the tray containing boards B1/2 and B2/1, as described above for gaining access to board B2/1. Take care to disconnect the connections described there.
- Remove the power supply unit as described for that unit.
- Loosen, by one turn, the screws retaining the top cover of the receiver RF tray.
- When all have been loosened, remove them completely.
- Lift the cover from the tray.

The boards are then accessible.

B12

The optional memory card and date/time stamp board is accessible from the bottom. It is fitted with the component side uppermost, between the front of the tray containing boards C1 to C5 and the front panel of the Service Monitor. To remove the board and gain access to the components proceed as follows.

- Remove the two screws securing the board assembly to the front of the RF oscillator tray.
- Disconnect the ribbon cable connected to the PCB.
- Lift the rear of the board assembly slightly and slide it towards the rear of the Service Monitor, disengaging the front of the board from its location.
- Remove the four screws holding the PCB to the fixing plate.

The board components are now accessible.

C1, C2, C3, C4 and C5

The boards that make up the RF oscillator are all located on the bottom tray of the Service Monitor. To gain access to them, proceed as follows:-

Remove the memory card board B12 as described above.

Loosen, by one turn, the screws holding the tray cover in position.

When all have been loosened, remove them completely.

Lift off the cover.

All the boards are then accessible.

B3/1, A11/1 and A15

These boards are located on the underside of the receiver RF tray and are accessible from the bottom of the Service Monitor. A11/1 and A15 are screened with a removable metal cover.

Access to them is achieved as follows:-

- Remove the memory card board assembly B12 as described above.
- Disconnect the two SMA connectors from the RF generator tray.
- Remove the screws which secure the RF generator tray containing boards C1 to C5 to the main frame of the Service Monitor. There are two screws on each side.
- Loosen the two rear screws (one each side), which secure the RF generator tray to the main frame, so that the tray can pivot.
- Carefully pivot the tray toward the rear of the Service Monitor, until its side members are supported against the rear panel of the main frame.

The analogue systems board B3/1 is now accessible. To gain access to A11/1 and A15 continue as follows:-

- Loosen, by one turn, all of the screws retaining the tray cover.
- When all have been loosened, remove them completely.
- Lift off the cover.

The boards are now accessible.

A20 and A21

These attenuator units are located on the right-hand under-side of the receiver RF tray. There are no user-replaceable parts within them, therefore access to the inside is not described.

> **Note that the internal connections to the attenuators are susceptible to damage if the attenuators are not removed from, and fitted to, the Service Monitor using the correct procedure.**

To remove them as complete units proceed as follows:-

- Commence as for access to A11/1, A15 and B3/1
- When the attenuators are accessible, locate the one to be removed.

Removing A20

To remove the A20, three stage attenuator, continue as follows:-

- Remove the metal cover over A11/1 and A15.
- Disconnect the ribbon cable to PLA on the attenuator.
- Disconnect the SMA connector which attaches the conformable RF cable to the end of the attenuator.
- Desolder the centre pin of the SMA connector on the side of the attenuator from its connection on board A11/1.

- Loosen the 2 hexagonal head screws which secure the connector to the wall of the tray. This will allow slight movement of the connector.
- Remove the two screws holding the attenuator to the RF tray. DO NOT loosen or remove any of the screws holding the attenuator cover in position.
- With the attenuator free to move to the edge of the Service Monitor, disconnect the SMA connection to the side of the attenuator.

The unit can now be lifted from the Service Monitor.

Fitting A20

To fit a new attenuator or to replace the existing unit proceed a follows

- Desolder the centre pin of the SMA connector on the side of the attenuator from its connection on board A11/1 if it is not already unsoldered.
- Loosen the 2 hexagonal head screws which secure the connector to the wall of the tray, if not already loose. This will allow slight movement of the connector.
- Position the attenuator over the spacer plate which is attached to the tray, ensuring that the mating parts of the SMA connectors are aligned. Mate the SMA connector between the attenuator and board A11/1, using finger pressure only.
- Loosely fit the attenuator to the tray using the screws, spacers and crinkle washers. The crinkle washer MUST be between the spacer and the attenuator. Do not tighten fully at this stage.
- Tighten the SMA connector between the attenuator and Board A11/1 to a torque of 1.2 MN.
- Tighten the screws holding the attenuator to the tray to a torque of 0.6 MN.
- Tighten the two screws holding the SMA connector to the tray wall, adjacent to board A11/1 and resolder the centre pin of the SMA connector to A11/1 board. Ensure that the soldered joint is good.
- Refit the lid to the RF tray.
- Before fitting the conformable cable to the SMA connector on the end of the attenuator, ensure that the cable is tightened at the RF tray end. Preform the cable so that it aligns with the attenuator connector. Connect to the attenuator and tighten to 1.2 MN.
- Reconnect the ribbon cable to PLA.

Removing A21

To remove the A21, two stage attenuator continue as follows:-

- Disconnect the ribbon cable to PLA on the attenuator.
- Disconnect the SMA connectors to the end and side of the attenuator.
- Remove the two screws holding the attenuator to the RF tray. DO NOT loosen or remove any of the screws holding the attenuator cover in position.

The attenuator can now be lifted from the Service Monitor.

Fitting A21

To fit a new attenuator or to replace the existing unit proceed a follows

- Position the attenuator and fix in position using the two screws. Tighten to a torque of 0.6 MN.
- Ensure that the conformable cables which connect to the attenuator are preformed to align with the connections and that they are tight at the RF tray connections. Tighten the connections to the attenuator to a torque of 1.2 MN.
- Reconnect the ribbon cable to PLA.

B4

The 600 Ω Interface board is fitted to the inside of the rear panel. It is held in place by four screws, nuts and washers, with nylon spacers between the board and the rear panel.

B7

The optional GPIB interface unit is located on the rear of the Service Monitor and is held in place by three screws. The printed circuit board within the unit is fitted with the component side covered. To gain access to the component side, remove the nuts retaining the GPIB connector to the interface case, followed by the two screws holding the PCB to the cover. The PCB will now be free.

Keyboard and display

The keyboard and the display are both accessible after removing the front panel. It is recommended that the front is not removed unnecessarily, as there are many connections to the various connectors and controls. If removal is necessary, proceed as follows:-

- Remove the memory card board assembly B12, as described above.
- Remove the two screws at the left side and three at the right side securing the front panel to the main frame. Do not loosen the four screws securing the RF load to the right-hand side of the main frame.
- When the front panel is loose from the main frame, remove connections as necessary to allow access to the appropriate unit.

Routine safety testing and inspection

In the UK the 'Electricity at Work Regulations' (1989) section 4(2) places a requirement on the users of equipment to maintain it in a safe condition. The explanatory notes call for regular inspections and tests together with a need to keep records.

The following electrical tests and inspection information is provided for guidance purposes and involves the use of voltages and currents that can cause injury. It is important that these tests are only performed by competent personnel.

Prior to carrying out any inspection and tests the instruments must be disconnected from the mains supply and all external signal connections removed. All tests should include the instrument's own supply lead, all covers must be fitted and the supply switch must be in the 'ON' position.

The recommended inspection and tests fall into three categories and should be carried out in the following sequence:

1. Visual inspection
2. Earth Bonding Test (Class I equipment only)
3. Insulation Resistance test.

1. Visual inspection

A visual inspection should be carried out on a periodic basis. This interval is dependant on the operating environment, maintenance and use, and should be assessed in accordance with guidelines issued by the Health and Safety Executive (HSE). As a guide, this instrument when used indoors in a relatively clean environment would be classified as 'low risk' equipment and hence should be subject to safety inspections on an annual basis. If the use of the equipment is contrary to the conditions specified, you should review the safety re-test interval.

As a guide, the visual inspection should include the following where appropriate:

Check that the equipment has been installed in accordance with the instructions provided (e.g. that ventilation is adequate, supply isolators are accessible, supply wiring is adequate and properly routed).

The condition of the mains supply lead and supply connector(s).

Check that the mains supply switch isolates the instrument from the supply.

The correct rating and type of supply fuses.

Security and condition of covers and handles.

Check the supply indicator functions (if fitted).

Check the presence and condition of all warning labels and markings and supplied safety information.

Check the wiring in re-wireable plugs and appliance connectors.

If any defect is noted this should be rectified before proceeding with the following electrical tests.

2. Earth bonding tests (Class I equipment only)

Earth bonding tests should be carried out using a 25A, 12V maximum open circuit voltage DC source. Tests should be limited to a maximum duration of 5 seconds and have a pass limit of 0.1Ω after allowing for the resistance of the supply lead. Exceeding the test duration can cause damage to the equipment. The tests should be carried out between the supply earth and exposed base metalwork, no attempt should be made to perform the tests on functional earths (e.g. signal carrying connector shells or screen connections) as this will result in damage to the equipment.

3. Insulation tests

A 500 V DU test should be applied between the protective earth connection and combined live and neutral supply connections with the equipment supply switch in the 'on' position. It is advisable to make the live/neutral link on the appliance tester or its connector to avoid the possibility of returning the instrument to the user with the live and neutral poles linked with an ad hoc strap. The test voltage should be applied for 5 seconds before taking the measurement. Marconi Instruments products employ reinforced insulation in their construction and hence a minimum pass limit of 7 MΩ should be achieved during this test.

Where a DC power adapter is provided with the instrument the adapter must pass the 7 MΩ test limit.

We do not recommend dielectric flash testing during routine safety tests. Most portable appliance testers use AC for the dielectric strength test which can cause damage to the supply input filter capacitors.

It is recommended that the results from the above tests are recorded and checked during each repeat test. Significant differences between the previous readings and measured values should be investigated.

If any failure is detected during the above visual inspection or tests, the instrument should be disabled and the fault should be rectified by an experienced Service Engineer who is familiar with the hazards involved in carrying out such repairs.

Safety critical components should only be replaced with equivalent parts, using techniques and procedures recommended by Marconi Instruments Ltd.

The above information is provided for guidance only. Marconi Instruments products are designed and constructed in accordance with International Safety Standards such that in normal use they represent no hazard to the operator. Marconi Instruments Ltd reserve the right to amend the above information in the course of continuing its commitment to product safety.

Chapter 3
ADJUSTMENT AND CALIBRATION

Contents

Introduction 3-2
Test equipment required 3-2
Warm-up time 3-2
Unlocking the diagnostics and calibration menus 3-2
Preliminary key press sequences 3-2
B1/2 Audio processor board 3-3
Audio generator output level (R2) 3-3
Voltmeter and Oscilloscope DC offsets and Oscilloscope sensitivity (R205, R211, R210) 3-4
Voltmeter DC Offsets and Voltmeter sensitivity (R232, R238) 3-4
SINAD / Distortion Meter 1 kHz notch set up (R263, R273) 3-4
Microphone amplifier level gain (R83) 3-4
Signal generator level reference (R61) 3-5
Modulation meter AM (R143) 3-5
Modulation meter FM (R181) 3-5
RF Tray Adjustments 3-6
A10 90 MHz swept local oscillator (L1) 3-6
A3 2nd & 3rd mixer (C1,C35,L2,L3,L4) 3-6
A4/1 10.7 MHz IF and Log Amp Board (C17, C27, C45, C55, C21, C31, C49, C59, C101, R4, R31, R42, R55, R64, R75, R119, R122) 3-7
A15 SSB option board (R24) 3-9
Software calibrations 3-11
Introduction 3-11
Service Monitor internal 10 MHz reference standard adjustment 3-11
Signal generator RF output level calibration 3-11
Signal generator AM calibration 3-11
Signal generator FM calibration 3-14
Broadband power meter calibration 3-14
Narrowband power meter calibration 3-15
Module Replacement and Re-calibration 3-17
Adjustments 3-17
Calibrations 3-18
Microprocessor board replacement 3-18
Reprogramming 3-18
..... 3-19

List of figures

Fig. 3 1 B1/2 adjustments and test points 3-3
Fig 3-2 Recommended equipment set-up for broadband power meter calibration 3-15

Introduction

This chapter describes adjustments which will restore the Service Monitor to its peak operating condition. Test equipment recommended for this purpose is listed below. The Service Monitor being adjusted is referred to by the initials UUT, (Unit Under Test).

Test equipment required

During the adjustment of the Service Monitor, ensure that all the test equipment used has been calibrated within the time specified by the makers of that equipment. Correction figures should be applied where necessary and instruments zeroed if required.

Description	Example
DVM	Solartron 7150+
Oscilloscope	Any general purpose instrument
Signal generator	Marconi Instruments 2019
Modulation meter	Marconi Instruments 2305
Spectrum analyzer	Marconi Instruments 2383
Zero loss probe	Marconi Instruments 2388
50 Ω adapter	
RF power meter.	Marconi Instruments 6960 with 6920 sensor and 6912 sensor.

Warm-up time

Apply power to the Service Monitor for 30 minutes to allow it to reach operating temperature, before commencing these adjustment procedures,.

Unlocking the diagnostics and calibration menus

A number of the adjustments require access to the calibration or diagnostics screens. These are normally locked but can be unlocked to allow service access. The locking is re-applied when the Service Monitor is powered down. To gain access to the calibration or diagnostics screens, proceed as follows.

Press the [HELP SETUP] key. If the message Locked appears adjacent to the *[Calibrate]* and *[Diagnostic]* keys, they must be unlocked before access can be obtained.

Press *[Diagnostic]* or *[Calibrate]*. The message ENTRY CODE: will appear.

Key in the digits 2, 9, 4 and 5 , and then press the [dBm/ENTER] key. If the procedure has been carried out correctly the Locked message will be removed, and the *[Calibrate]*and *[Diagnostic]* keys will now be active.

Preliminary key press sequences

Each adjustment procedure which requires access to the diagnostic or calibrate menus, shows the full key press sequence commencing with the [HELP/SETUP] key. If adjustment instructions are followed consecutively, a diagnostic or calibrate menu will continue to be displayed and there will be no need to use the full key press sequence. To clarify the instructions for engineers making individual adjustments, the preliminary key press sequence is shown inside braces, { }. When making consecutive adjustments ignore the braced sequence.

B1/2 Audio processor board

BACK

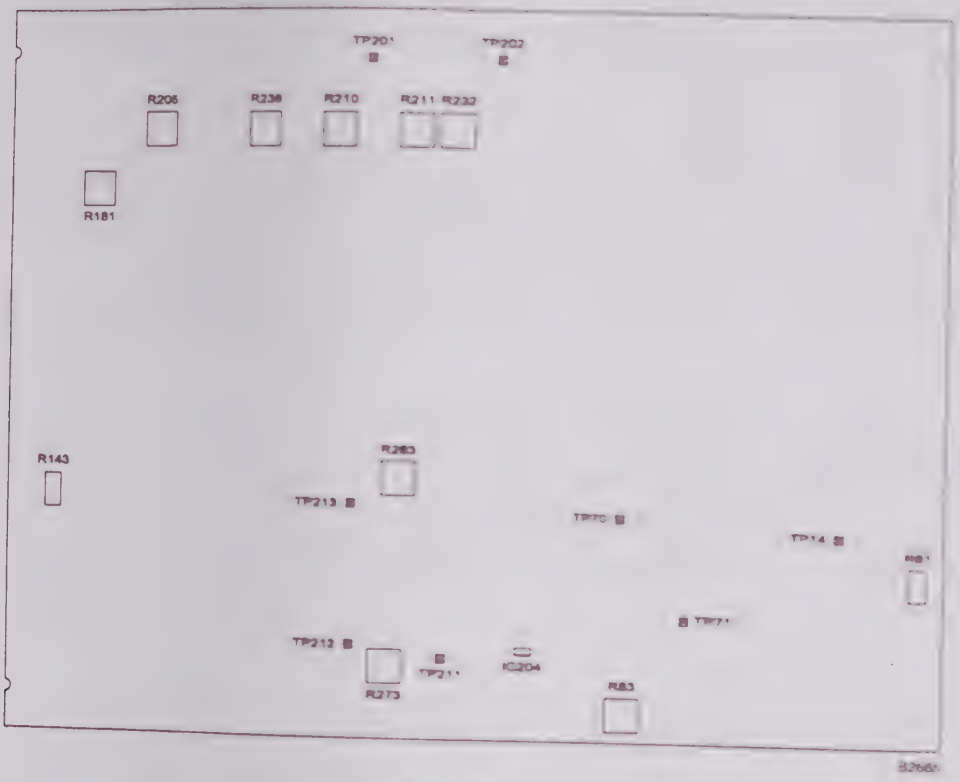

FRONT

Fig. 3 1 B1/2 adjustments and test points

Notes

Interactive adjustments

Most of the adjustments on this board are interactive. If adjustment needs to be made, it is recommended that the procedure for the full board is carried out. The signal generator output level adjustment R61, is not interactive with other adjustments.

600 Ω interface

Set the Audio Input Impedance to High, the Audio Output Impedance to Low, and the 20 dB Audio Attenuator to 0 dB, by using the appropriate soft keys on setup page 2.

Audio generator output level (R2)

See note above regarding 600 Ω interface option.

1. Press [HELP/SETUP], *[Diagnostic]*, *[B1 Setup]*, *[AF Level]*. This calls up an Audio Generator output setting of 1 kHz sine wave, at 1 V.
2. Monitor the AF GEN OUT socket on the front panel, using a DVM set to monitor AC Volts.
3. Adjust R2 for a DVM reading of 1.000 V ±2 mV RMS.

Voltmeter and Oscilloscope DC offsets and Oscilloscope sensitivity (R205, R211, R210)

See note above regarding 600 Ω interface option.

1. Press {[HELP/SETUP], *[Diagnostic]*, *[B1 Setup]*,} *[Scope/VM]*, *[IC200 Offset]*.
2. Short circuit the centre and outer connections of the front panel AF INPUT socket, using a BNC short circuit termination.
3. Monitor TP200, using a DVM set to monitor DC Volts.
4. Adjust R205 for 0 mV ±0.2 mV DC.
5. Press *[IC201 Offset]*, and monitor TP201 using a DVM set to monitor DC Volts.
6. Adjust R211 for 0 mV ±0.5 mV DC.
7. Remove the short circuit from the AF INPUT socket.
8. Press *[Scope Sens]* and connect the front panel AF GEN OUT to AF IN, using a suitable connecting lead. The UUT AF Generator will now be supplying a signal of 1.06 V RMS at 1 kHz to the AF IN socket.
9. Monitor TP210 (PLB10, IC204 pin 7), using a DVM set to monitor AC Volts.
10. Adjust R210 to give 1.768 V RMS ±3 mV.

Voltmeter DC Offsets and Voltmeter sensitivity (R232, R238)

See note above regarding 600 Ω interface option.

1. Press {[HELP/SETUP], *[Diagnostic]*, *[B1 Setup]*, *[Scope/VM]}*, *[IC205 Offset]*.
2. Short circuit the centre and outer connections of the front panel AF INPUT socket, using a BNC short circuit termination.
3. Monitor TP202, using a DVM set to monitor DC Volts.
4. Adjust R232 for 0 mV ±0.5 mV DC.
5. Remove the short circuit from the AF INPUT.
6. Press *[Vm sens 3kHzLP]*. Connect the front panel AF GEN OUT socket to the AF IN socket, using a suitable connecting lead. The UUT AF Generator will now be supplying a signal of 1.25 V RMS at 1 kHz to AF IN.
7. Monitor TP211, using a DVM set to monitor AC Volts.
8. Adjust R238 for 4.883 V RMS ±10 mV.
9. Press *[Vm sens 50kHzLP]*. Using a DVM, check that the signal level at TP211 is within 4.883 V ±100 mV RMS.

SINAD / Distortion Meter 1 kHz notch set up (R263, R273)

See note above regarding 600 Ω interface option.

1. Press {[HELP/SETUP], *[Diagnostic]*, *[B1 Setup]*, *[Scope/VM]} [Sinad]*.
2. Connect the front panel AF GEN OUT socket to the AF IN socket using a suitable connecting lead. The UUT AF Generator will now be supplying a signal of 1.25 V RMS at 1 kHz to AF IN.
3. Turn R263 fully counter-clockwise.
4. Using an oscilloscope, monitor TP213 and adjust R273 for a minimum 1 kHz signal on the oscilloscope.
5. Using an oscilloscope monitor TP212 and adjust R263 for a minimum 1 kHz signal on the oscilloscope.

Microphone amplifier level gain (R83)

See note above regarding 600 Ω interface option.

1. Press ,{[HELP/SETUP], *[Diagnostic]*, *[B1 Setup]*}, **[Return]*,*[MIC Level]*. (* The *[Return]* key should be pressed when making consecutive adjustments.)

2. Connect AF GEN OUT to PLJ1 (GND to PLJ3). The UUT AF GEN will now be supplying a signal of 100 mV RMS at 1 kHz to PLJ1.
3. Using a DVM set to monitor AC Volts, check that the signal level at TP70 is between 60 and 140 mV RMS.
4. Transfer the DVM to monitor TP71.
5. Adjust R83 for 1.00 V RMS ±10 mV.

Signal generator level reference (R61)

This is an initial adjustment, which should only be necessary when the board is first fitted. The final adjustment of R61 is set during the signal generator output level calibration

1. Press {[HELP/SETUP], *[Diagnostic]*, *[B1 Setup]*}, *[RF Level]*. This switches on the modulation generator, set to a frequency of 1 kHz at 0% depth
2. Monitor TP14, using a DVM set to monitor DC Volts
3. Adjust R61 for -4.50 V ±10 mV DC.

Modulation meter AM (R143)

1. Recall the UUT factory settings by pressing the [MEM] key, and then recalling memory 01
2. Select [TX TEST] and press the [SELECT] key to select the ANTENNA input.
3. Press *[TX FREQ]*, 100 MHz, *[Return]*, *[MOD METER]* then press *[AM/FM]* (or *[AM/FM/SSB]* if the SSB decode option is fitted) to select AM. The 30 kHz IF filter and the 0.3 to 3.4 kHz AF filter should already be selected from power on. If this is not the case, then select them.
4. Set an external signal generator to provide a 100 MHz, 0 dBm signal, with 50% AM at a 1 kHz modulation rate.
5. Connect this to an external modulation meter set to measure AM. (The AM measurement accuracy should be 1% or better e.g. Marconi Instruments 2305.) Note the reading on the external modulation meter.
6. Transfer the signal generator output from the external modulation meter to the ANTENNA input of the UUT
7. Adjust R143 so that the UUT modulation meter AM reading is the same as that noted on the calibrated modulation meter.

Modulation meter FM (R181)

1. Recall the UUT factory settings by pressing the [MEM] key, and then recalling memory 01
2. Select [TX TEST] and press the [SELECT] key to select the ANTENNA input.
3. Press *[TX FREQ]*, 100 MHz. The UUT modulation meter should already be set to demodulate FM, with the 30 kHz IF filter and the 0.3 to 3.4 kHz AF filter selected from power on. If this is not the case, then select them.
4. Set an external signal generator to provide a 100 MHz, 0 dBm signal, with 25 kHz FM at a 1 kHz modulation rate.
5. Connect this to an external modulation meter set to measure FM. (The FM measurement accuracy of the external modulation meter should be 0.5% or better e.g. Marconi Instruments 2305.) Note the reading on the external modulation meter.
6. Connect the signal generator to the ANTENNA input of the UUT.
7. Adjust R181 so that the UUT modulation meter FM reading is the same as that noted on the external modulation meter.

RF Tray Adjustments

A10 90 MHz swept local oscillator (L1)

The following adjustment must be made with the RF tray lid in position. As it is necessary to monitor a test point under the lid, a temporary extension must be made to the test point. This should be made from a piece of insulated wire, approximately 6 cm long, with a Berg socket on one end to connect to the test point, and the other end prepared suitably for connection of the test equipment described below.

1. Remove the RF lid.
2. Unscrew L1 core until it is flush with the top of the former.
3. Attach the extension wire to TP3. Route the wire through the hole in the RF lid for L1 adjustment and place the RF lid back in position. (One or two screws holding the lid in position is sufficient.)
4. Select [TX TEST].
5. Monitor the signal on the wire attached to TP3, using both an oscilloscope and a DVM, setting the DVM to monitor DC.
6. Slowly advance L1 adjuster, observing the waveform on TP3. The frequency should decrease and finally become zero as A10 locks to the 90 MHz 3rd local oscillator. Note the DVM reading V^1, which corresponds to the upper frequency capture limit.
7. Continue advancing L1 adjuster until lock is lost as the DVM reading increases further.
8. Slowly unscrew L1 adjuster, observing TP3 waveform frequency decreasing, until lock is regained when the frequency becomes zero.
9. Make a note of the DVM reading, V^2, which corresponds to the lower frequency capture limit.
10. Adjust L1 so that TP3 voltage is the mean. i.e. $\frac{1}{2}(V^1+V^2)$. The oscillator should now have locked to 90 MHz, in the middle of its capture range.

A3 2nd & 3rd mixer (C1,C35,L2,L3,L4)

1. Recall the UUT factory settings by pressing the [MEM] key, and then recalling memory 01.
2. Select [SPEC ANA] and press *[Centre Freq]*, 100 MHz, *[Span]*, 1 kHz, *[REF LEVEL]*, 0 dBm, then press [SELECT] to select the ANTENNA input.
3. Connect a signal generator, set to provide 100 MHz at 0 dBm, to the ANTENNA input socket.
4. Tune the external spectrum analyzer to 10.7 MHz with a reference level of 0 dBm, 1 dB/div, span 100 kHz/div, resolution bandwidth 300 kHz.
5. Using a zero loss probe (e.g. Marconi 2388) with the external spectrum analyzer, monitor PLD.
6. Adjust C1 & C35 for a maximum signal level as seen on the spectrum analyzer.
7. Change the signal generator frequency to 78.6 MHz and set its level to +10 dBm.
8. Set the external spectrum analyzer to a reference frequency of 100.7 MHz, Span 2 kHz/div, 10 dB/div, resolution bandwidth 1 kHz, no input attenuation.
9. Monitor TP2 and adjust L2 to minimise the 100.7 MHz signal as seen on the spectrum analyzer.
10. Change the signal generator frequency to 94.65 MHz.
11. Set the external spectrum analyzer to a reference frequency of 84.65 MHz, Reference level -50 dBm, 1 dB/div.
12. Adjust L3 to minimise the 84.65 MHz signal on TP2.

13. Change the signal generator frequency to 105.35 MHz.
14. Set the external spectrum analyzer to a reference frequency of 73.95 MHz. Reference level -60 dBm.
15. Adjust L4 to minimise the 73.95 MHz signal on TP2.

A4/1 10.7 MHz IF and Log Amp Board

(C17, C27, C45, C55, C21, C31, C49, C59, C101,
R4, R31, R42, R55, R64, R75, R119, R122)

1. Access the NB POWER METER CAL screen on the UUT by using the key sequence [HELP SETUP], *[Calibrate]*, *[NB pwr Mtr]*. Reset the parameters to factory defaults by pressing the [Reset Cal] key, but do not store them.
2. Set the UUT to [SPEC ANA], RF input [SELECT] to antenna in. *[Span]*, [1kHz], *[Centre Freq]*, [100MHz], *[Ref Level]*, [0dBm], *[Res BW]*, *[Manual Res BW]*,*[3MHz]*
3. Set the external spectrum analyzer to 10.7 MHz, Ref level 20 dBm, 10 dB div, 100 kHz span/div.
   (Set the 2388 low loss probe to have a 10 dB attenuation as follows
   Connect the low loss probe to the spectrum analyzer tracking generator output, set the tracking generator ON and its level to -10 dBm. Adjust the probe for a reading of -20 dBm on the external spectrum analyzer display.)
   Remove probe.
4. Set the external signal generator to 10.7 MHz at an RF level of -6 dBm.
5. Remove the lead connected to PLA on A4/1 and connect the signal generator to PLA.
6. Using the 2388 probe and ensuring a good earth connection, monitor the level applied at PLA and adjust the signal generator output level until the external spectrum analyzer display indicates -12 dBm ± 0.2 dB at PLA. (The actual level is -2 dB, but taking into account the 10 dB of attenuation of the probe the displayed level is -12 dBm). In other words, for clarity, all levels given for the external spectrum analyzer display are those that will actually be seen on the display with the probe attenuation set as stated.
7. Transfer the probe to A4/1 TP8 and adjust R4 for a reading of -2.0 dBm ± 0.1 dB as indicated on the external spectrum analyzer display.
8. Disconnect the signal generator from PLA.
9. Set the UUT resolution bandwidth to *[300Hz]*.
10. Connect the external spectrum analyzer tracking generator output to PLA. Set the external spectrum analyzer to -2 dBm ref level, 0.5 dB/div, zero span.
11. Monitor TP8 with the low loss probe. Adjust C17, C27, C45 and C55 for maximum level on the external spectrum analyzer. The level must be greater than -7 dBm. (The trace should be a horizontal line, but may initially be off the screen. If necessary, adjust the external spectrum analyzer ref level control to bring the trace into view.)
12. Set the external spectrum analyzer to -20 dBm ref level, 10 dB div, 1 MHz div span. Connect the low loss probe to the tracking generator output and adjust the probe for -50 dBm on the external spectrum analyzer display (40 dB attenuation). Remove probe.
13. Set the external spectrum analyzer to -32 dBm reference level, 2 dB div, 100 kHz div span. Connect the tracking generator output to PLA.
14. Set the UUT resolution bandwidth to *[30kHz]*.
15. Connect the low loss probe to TP4. Adjust C21 and R31 for best centralisation and symmetry (the adjustments interact). Alterations may need to be made to the external analyzer settings to facilitate making these adjustments.
16. Set the UUT resolution bandwidth to *[300Hz]*.
17. Set the external spectrum analyzer to a 200 Hz/div span and 0.5 dB/div and finally adjust C17 until the response is accurately tuned to 10.7 MHz

18. Set the UUT resolution bandwidth to *[30kHz]*. Set the external spectrum analyzer to a 100 kHz/div span and 5 dB/div.

19. Connect the low loss probe to TP5. Adjust C31 and R42 for best centralisation and symmetry (the adjustments interact). Alterations may need to be made to the external analyzer settings to facilitate making these adjustments.

20. Set the UUT resolution bandwidth to *[300Hz]*. Set the external spectrum analyzer to a Ref level of -36dBm.

21. Set the external spectrum analyzer to a 200 Hz/div span and 0.5 dB/div. Finally adjust C27 until the response is accurately tuned to 10.7 MHz.

22. Set the UUT resolution bandwidth to *[30kHz]*. Set the external spectrum analyzer to a Ref level of -20 dBm, 5 dB/div and 50 kHz/div span.

23. Connect the low loss probe to TP6. Adjust C49 and R64 for best centralisation and symmetry (the adjustments interact). Alterations may need to be made to the external analyzer settings to facilitate making these adjustments.

24. Set the UUT resolution bandwidth to *[300Hz]*.

25. Set the external spectrum analyzer settings to 200 Hz/div span, 0.5 dB/div and to a Ref level of -29 dBm. Finally adjust C45 until the response is accurately tuned to 10.7MHz.

26. Set the UUT resolution bandwidth to *[30kHz]*. Set the external spectrum analyzer to 10 dB/div and 100 kHz/div span.

27. Connect the low loss probe to TP7. Adjust C59 and R75 for best centralisation and symmetry (the adjustments interact). Alterations may need to be made to the external analyzer settings to facilitate making these adjustments.

28. Set the UUT resolution bandwidth to *[300Hz]*. Set the external spectrum analyzer to a Ref level of -30 dBm.

29. Set the external spectrum analyzer to a 200 Hz/div span and 0.5 dB/div. Finally adjust C55 until the response is accurately tuned to 10.7 MHz.

30. Set the external spectrum analyzer to -17.5 dBm ref level, 0.5 dB/div, 100 kHz/div span. Connect the low loss probe to the tracking generator output and adjust the probe for -20 dBm on the external spectrum analyzer display (10 dB attenuation). Remove probe.

31. Set the external signal generator to 10.7 MHz at an RF level of -10 dBm and connect this to PLA in place of the tracking generator.

32. Set the UUT resolution bandwidth to *[3MHz]*.

33. Connect the low loss probe to IC4 pin 16. Adjust C101 for maximum level on the external spectrum analyzer (nominally -4dBm). The ref level control on the external spectrum analyzer may need to be adjusted to move the peak of the signal onto the screen.

34. Make a note of the level achieved with the UUT 3 MHz resolution bandwidth selected. Step through the 300 kHz, 30 kHz, 3 kHz and 300 Hz filters in turn and check that the level at IC4 pin 16 does not vary by more than ±1.5 dB from that measured with the 3 MHz bandwidth selected.
    If the 300Hz filter is >1.5 dB higher than the 3 MHz level, increase the value of R55.
    If it is >1.5 dB lower than the 3 MHz level, then decrease the value of R55

35. Set the external spectrum analyzer to reference level -20 dBm, span 100 kHz, 2 dB/div. Connect the low loss probe to the tracking generator output and adjust the probe to give -30 dBm on the external spectrum analyzer display (20 dB attenuation). Remove probe.

36. Set the external signal generator to provide 10.7 MHz at -7 dBm and connect to PLA.

37. Set the external spectrum analyzer to -20 dBm reference level, 2 dB/div.

38. Monitor PLA using the low loss probe and adjust the external signal generator RF level until the external spectrum analyzer reads -22 dBm. Make a note of the signal generator level at this point (**REF X**).

39. Set the external spectrum analyzer reference level to -5 dB and transfer the low loss probe to TP8.

40. Adjust R4 for a reading of -12 dBm ±0.1 dB on the external spectrum analyzer.

41. Set the external signal generator RF level to (REF X) -70 dB.

42. Adjust R119 for -70 dBm on the UUT. (Use the marker facilities of the UUT spectrum analyzer to achieve best results.)

43. Set the external signal generator level to (REF X).

44. Adjust R122 for 0 dBm on the UUT. (Use the marker facilities of the UUT spectrum analyzer to achieve best results.)

45. Repeat steps 41, 42, 43 and 44 until both measurements are consecutively correct.

46. Set the UUT spectrum analyzer vertical scale to 10 dB/div then step the signal generator down in 10dB steps to (REF X) -70 dB noting at each step the alignment of the signal on the graticule lines of the display. Any linearity errors should be distributed evenly. If this is not the case then use R119 and R122 to optimise.

47. Remove the signal generator from PLA and reconnect the lead from A3 board.

48. Access the NB POWER METER CAL screen on the UUT by using the key sequence [HELP SETUP], *[Calibrate]*, *[NB pwr Mtr]*. Use the arrow down key to highlight 25MHz on the display.

49. Set the external signal generator to provide 25 MHz 0 dBm ± 0.1 dB. To ensure accuracy set the signal generator level against an external power meter.

50. Connect the signal generator to the N Type input of the UUT and adjust R4 for a reading of -1.5 dBm on the UUT. (The level is set low, to ensure that the absolute levels can be set correctly under the narrowband software data correction menu, as software corrections can only be made in one direction.)

A15 SSB option board (R24)

On the UUT, connect the BNC RF output socket to the ANTENNA RF input socket, using a suitable connecting lead.

Select [RX TEST], and press the [SELECT] key to select BNC output and ANTENNA input.

Select *[RF GEN]*, [FREQ], 580 MHz, [LEVEL], –90 dBm.

Press *[MOD GEN]*, and set both modulation generators to OFF.

Select [TX TEST].

Select *[TX FREQ]*, 580 MHz, *[Return]*.

Press *[TxPower]*, then select narrowband power (indicated by NB on the display) by pressing *[Broad/Narrow]*.

Press *[Return]*, then use the *[Scope/Bar]* and *[Scope]* keys to show the oscilloscope display. Set the timebase to 500 µs, using the [C]and [D] keys.

Press *[Return]*, *[Mod Meter]*. Use the *[AM/FM SSB]* key to select SSB Receiver demodulation.

Use the *[RS Sens]* key to select High Sens.

Check that the receiver section of the UUT is correctly tuned to the signal from the UUT RF generator. This is shown by the frequency offset indicating 0 Hz ±10 Hz, and an indicated power input of –90 dBm ±3 dB.

Press *[Return]*, *[Tx Freq]*, 580.001 MHz.

Turn the VOLUME control clockwise and check that a 1 kHz tone can be heard from the loudspeaker.

Observe the UUT oscilloscope display, and adjust R24 on A15 board until the sinusoidal waveform occupies 3 vertical divisions.

Select [RX TEST] mode.

Select *[RF Gen]*, [LEVEL], –50 dBm.

Reselect [TX TEST], and check that the trace on the oscilloscope display still occupies 3 vertical divisions.

Refit the RF cover and the Service Monitor outer cover.

Software calibrations

Introduction

The software calibration facility provides for the correction of the calibration figures held within the Service Monitor which are called up by the software during normal use.

Software calibration is carried out from a set of calibration screens, which are accessed from Setup by pressing the *[Calibrate]* key. Refer to Unlocking the calibration and diagnostics menus earlier in this chapter.

Each calibration screen contains tables of calibration points and correction figures. The *[↑]* and *[↓]* keys are used to select specific calibration points. New calibration figures are entered during the software calibration routines. These new figures can be overwritten into the software by returning to the software calibration selection screen and pressing the *[Store Cal]* key.

There is a *[Reset Cal]* key on each calibration screen. Pressing that sets all the calibration points on the selected screen to a common datum. The calibration figures called up by pressing this key will only be retained if the *[Store Cal]* key is pressed. (See above)

The instructions for carrying out each of the software calibrations follows below.

Service Monitor internal 10 MHz reference standard adjustment

Note **Prior to carrying out this adjustment the UUT should have been allowed to warm up for at least 30 minutes.**

1. Press [HELP SETUP], *[Setup]*, *[Calibrate]*. If the *[calibrate]* key is locked refer to Unlocking the calibration and diagnostics menus, earlier in this chapter.'
2. Press *[Freq Std]* to enter the FREQ STANDARD CAL display.
3. Connect a signal generator set to provide 1000 MHz at 0 dBm, to the N-type RF connector. (The signal generator used should be locked to an external reference that has an accuracy of 1 part in 10^9 or better.)
4. The offset reading at the bottom of the Service Monitor display will now indicate the Service Monitor reading error at 1000 MHz.
5. Use the front panel variable control to alter the calibration value displayed, until the offset reading is as close to 0 Hz as possible. (The *[↑]* and *[↓]* keys switch between coarse and fine adjustment).
6. When the offset indication has been set to as close to 0 Hz as practical, press *[Return]*, *[Store Cal]*.

Signal generator RF output level calibration

The signal generator RF output level is calibrated by altering stored correction values within the calibration screens. There are three soft keys concerned with RF Level, *[Output Amp]*, *[Output Level]* and *[Attenuators]*. These are accessed by pressing [HELP SETUP], *[Calibrate]*. If the *[calibrate]* key is locked refer to .Unlocking the calibration and diagnostics menus, earlier in this chapter.'

There is also a hardware adjustment, R61 on the B1/2 board, which sets the overall reference level for all of these software corrections.

When only minor adjustment is required, such as optimisation at specific frequencies, the relevant software corrections will usually provide sufficient adjustment, without adjusting R61. However if extensive repairs are carried out on either A6/1 or B1/2 boards, then it is likely that R61 will need adjustment. This is described later in this chapter. If R61 is adjusted, all signal generator software calibrations, except the signal generator FM calibration, will need carrying out.

1: Press [HELP SETUP], *[Calibrate]*,.*[Output level]*, *[BNC output]*, *[Reset Cal]*.

2: Connect a power meter to the BNC output socket on the front panel.

3: Using the [↑] and [↓] keys to move the cursor, select each frequency in turn while monitoring the power meter and note the power reading. Select the frequency which has the lowest power output as displayed on the power meter.

Adjust R61 on B1/2 board, to set the power level at this frequency to +6 dBm ±0.1 dBm.

OUTPUT AMP

This is used to calibrate the scale shape of the pin diode attenuator on A6 board. There are eighteen calibration points , 0 to 17, corresponding to 0 to −17 dBr, which covers the pin diode attenuator range.

When the OUTPUT AMP CAL screen is selected, the signal generator is automatically configured to provide a 144 MHz signal at a nominal level from the BNC RF output socket (Typically +8 dBm, with the 0 dBr calibration point highlighted). This first calibration point (0) has a fixed data value of 4095 and cannot be adjusted. It is used as the reference for the other calibration points.

1. Access the OUTPUT AMP CAL screen by using the key sequence, [HELP SETUP], *[Calibrate], [OUTPUT AMP].*
2. Connect a power meter (i.e. Marconi Instruments 6960 + 6912 sensor) to the BNC RF output socket.
3. Ensure that calibration point 0 is highlighted in inverse video. (The [↑] and [↓] keys are used to step up and down the table.)
4. Make a note of the reading for the 0 dBr reference point, REFERENCE.
5. Using the [↑] and [↓] keys, step down to the -1 dBr calibration point.
6. Use the front panel variable control to alter the data value, until the power meter indicates 1 dB less than the REFERENCE. Repeat this process for the remaining calibration points, -2 dBr to be 2 dB lower than REFERENCE, -3 dBr to be 3 dB lower than REFERENCE, and so on.
7. When all calibration points have been set up, overwrite the previous figures by pressing the *[Return]* key, then *the [Store Cal key]* on the software calibration selection screen.

Output level

This is used to calibrate the output frequency response of the signal generator, for each of the three output configurations. These are:-

BNC output,
N type output with ANTENNA selected for input,
N type selected for output and for input (Single port).

There are 22 calibration points for each configuration. Calibration point 0 is at 10 MHz, Calibration point 1 is at 50 MHz. Thereafter calibration points are at 50 MHz intervals to 1050 MHz.

Each calibration point can be varied between 0 and 5 dB, with 0.1 dB resolution. As the calibration point value is increased, the output level is reduced by the same amount. The calibration points are adjusted to give an output level of 5 dBm on the BNC socket and -21 dBm on the N type socket.

1. Access the OUTPUT FLATNESS N CAL screen by using the key sequence, [HELP/SET-UP], *[Calibrate], [Output Level], [N out Ant in].*
2. Connect a power meter (i.e. Marconi Instruments 6960 + 6920 sensor) to the N type RF output socket.
3. Ensure that the 10 MHz calibration point is highlighted in inverse video. (The *[↑] and [↓]* keys are used to step up and down the table).
4. Using the front panel rotary control, alter the data value until the power meter indicates – 21.0 dBm. Repeat this process for the remaining frequencies.

5. Access the OUTPUT FLATNESS N N CAL screen by pressing the *[N out N in]* key.
6. Ensure that the 10 MHz calibration point is highlighted in inverse video. (The *[↑] and [↓]* keys are used to step up and down the table.)
7. Using the front panel rotary control, alter the data value until the power meter indicates –21.0 dBm. Repeat this process for the remaining frequencies.
8. Access the OUTPUT FLATNESS BNC CAL screen by pressing the *[BNC output]* key.
9. Connect a power meter (i.e. Marconi Instruments 6960 + 6912 sensor) to the BNC RF output socket.
10. Ensure that the 10 MHz calibration point is highlighted in inverse video. (The *[↑] and [↓]* keys are used to step up and down the table.)
11. Using the front panel rotary control, alter the data value until the power meter indicates 5.0 dBm. Repeat this process for the remaining frequencies.
12. When all calibration points have been set up, overwrite the previous figures by pressing the *[Return]* key, then *the [Store Cal key]* on the software calibration selection screen.

Attenuators

From this screen, the calibration and frequency response of the signal generator attenuator can be optimised. There are 22 calibration points for each of the 4 attenuator pads.

Calibration point 0 is at 10 MHz. Calibration point 1 is at 50 MHz. Thereafter calibration points are at 50 MHz intervals to 1050 MHz. The four attenuator pads are 10 dB, 20 dB and two 40 dB pads.

When the *[Attenuators]* key is pressed and the 10 dB PAD CAL screen is displayed, the signal generator will provide a signal at the first calibration point frequency of 10 MHz. The attenuator pad can be switched in or out of circuit by pressing the *[Pad In/Out]* key, with the current state shown at the bottom of the display.

The calibration is performed using the N type socket and works in the following manner :-

The pad is switched out of circuit and the RF output level is measured and noted. The pad is then switched into circuit and the RF output level is again measured and noted.

By comparing the actual reduction in output, with the expected reduction, the true value of attenuation is calculated. The change required to the correction figure is calculated, and the current figure adjusted accordingly.

It should be noted that altering the correction value does not alter the output level while in the calibration screen. The correction will not take affect until returning to normal operation.

1. Select [HELP SETUP], *[Calibrate]*, *[Attenuators]*.
2. Connect a power meter (i.e. Marconi Instruments 6960 + 6920 sensor) to the N type RF output socket.
3. With the 10 dB PAD CAL screen displayed, and the 10 MHz point shown in inverse video, press the [Pad In/Out] key to set the pad state to OUT.
4. Note the power meter reading (e.g. -21.0 dBm).
5. Press the [Pad In/Out] key to set the pad state to IN.
6. Note the new power meter reading (e.g. -31.8 dBm.). Subtracting the first reading from the second, indicates that the 10 dB pad actually has an attenuation of 10.8 dB at 10 MHz, instead of the required 10 dB. The correction figure should therefore be set to +0.8 dB, to increase the signal level by this value when the 10 dB pad is switched in.
7. Using the front panel rotary control change the data value to the correction value calculated.
8. Repeat this process for each of the frequencies in the table. (The *[↑] and [↓]* keys are used to step up and down the table.)

9. When all the frequencies in the table have been checked, and adjusted if necessary, the procedure should be repeated for the remaining three attenuator pads. The attenuation levels are 20, 40 and 40 dB respectively.

10. When all calibration points have been set up, overwrite the previous settings by pressing, the*[Return]* key, then the *[Store Cal]* key.

Signal generator AM calibration

This is used to calibrate the Signal Generator AM Depth. There are eighteen calibration points, 0 to 17, corresponding to 0 to -17 dBr, to cover the scale shape of the pin diode attenuator on A6/1 board.

When the AM LEVEL CAL screen is selected, the signal generator is automatically configured to provide a 144 MHz signal, with 70% AM at a nominal level (typically +8 dBm with the 0 dBr calibration point highlighted) from the BNC RF output socket.

1. [Access the AM LEVEL CAL screen by using the key sequence, [HELP/SET-UP], *[Calibrate]*, *[AM Level]*.

2. Connect an accurate modulation meter (i.e. Marconi Instruments 2305) to the BNC RF output socket. Set the external modulation meter to monitor AM in a 300 Hz to 3.4 kHz bandwidth.

3. Ensure that calibration point 0 is highlighted in inverse video. (The *[* ↑ *]* and *[* ↓ *]* keys are used to step up and down the table).

4. Using the front panel rotary control, alter the data value until the external modulation meter indicates 70.0% AM.

5. Using the *[* ↑ *]* and *[* ↓ *]* keys, step down to the next correction figure in the table and again alter the correction value until the external modulation meter indicates 70.0% AM.

6. Repeat for the remaining levels in the table.

7. When all calibration points have been set up, overwrite the previous figures by pressing the *[Return]* key, then the *[Store Cal key]* on the software calibration selection screen..

Signal generator FM calibration

Frequency modulation is applied to the signal generator of the Service Monitor using two methods.

At high modulation rates, the signal generator oscillator is frequency modulated by applying the modulating signal directly onto the VCO. At low modulation rates, frequency modulation is achieved digitally, by making use of the fractional-N system which is inherently accurate.

The FM calibration operates by first noting the deviation produced by a low modulation frequency (200 Hz) using the digital method. A higher modulation rate (18 kHz, but 9 kHz if the low noise signal generator option is fitted) is then selected. A correction figure is then adjusted, to calibrate this higher rate against the level produced by the more accurate digital method. The calibration is carried out with a deviation level of 100 kHz. There are 105 points to calibrate corresponding to 10 MHz to 1050 MHz in 10 MHz steps (If the low noise signal generator option is fitted, then there are 75 points to calibrate corresponding to 288 MHz to 576 MHz in 4 MHz steps).

1. [Access the FM LEVEL CAL screen by using the key sequence, [HELP/SET-UP], *[Calibrate]*, *[FM Level]*.

2. Connect an accurate modulation meter (i.e. Marconi Instruments 2305) to the BNC RF output socket.

3. Set the modulation meter to monitor FM in a 30 Hz to 50 kHz bandwidth. (The bandwidth chosen on the modulation meter used must be flat at both 200 Hz and 18 kHz/9 kHz.)

4. Press the *[Mod Low/High]* key until Mod freq is Low is displayed at the bottom of the table.

5. Ensure that calibration point for 10 MHz (288MHz if the low noise signal generator option is fitted) is highlighted in inverse video. The *[* ↑ *]* and *[* ↓ *]* keys are used to step up and down the table and the *[* E *]* and *[* F *]* keys to step to the next or previous band of frequencies. Ensure the modulation meter tunes to this frequency and note the deviation displayed. (This should be close to 100 kHz.)

6. Toggle the *[Mod Low / High]* key until Mod freq is High is displayed at the bottom of the table. Using the front panel rotary control, alter the data value until the modulation meter indicates the same deviation level as was noted for the LOW modulation frequency.
7. Toggle the *[Mod Low/High]* key to return to *Mod Freq LOW*.
8. Using the / ↑ / and / ↓ / keys step down to the next frequency in the table and repeat the process.
9. When all calibration points have been set up, overwrite the previous figures by pressing the *[Return]* key, then the *[Store Cal key]* on the software calibration selection screen.

Broadband power meter calibration

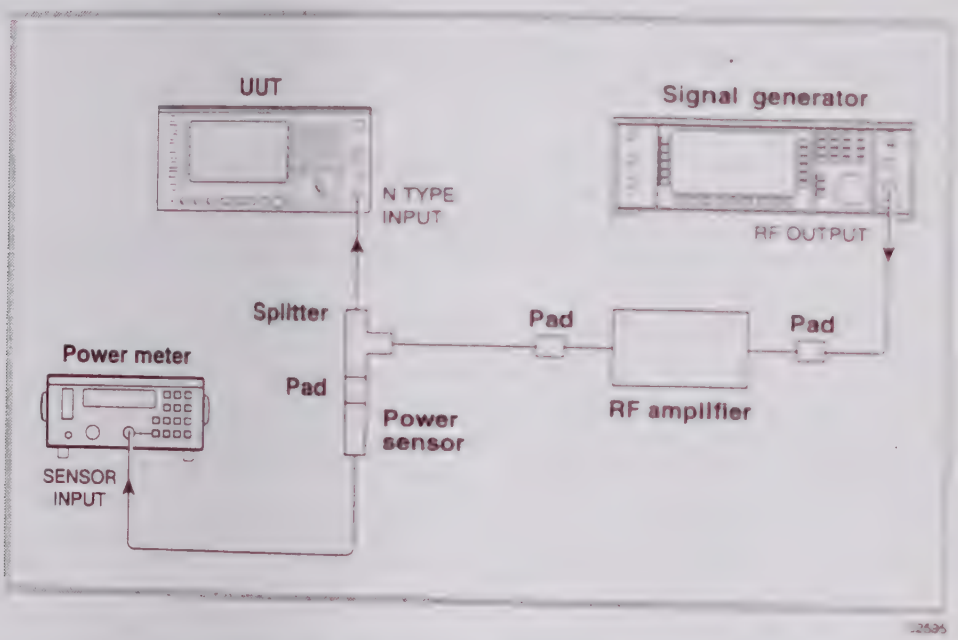

Fig 3-2 Recommended equipment set-up for broadband power meter calibration

This is used to calibrate the frequency response of the Broadband Power Meter for each of the input configurations. In the 2 port duplex modes there are four groups of 22 points, corresponding to the following configurations:-

N-Type input	All input 10dB pad switched out.
ANT input	All input 10dB pad switched out.
N-Type input	All input 10dB pad switched in.
ANT input	All input 10dB pad switched in.

In the N-type 1 port duplex modes there are also four groups of 22 points, corresponding to the following configurations:-

Input 10dB pad in	Output 10dB pad out
Input 10dB pad in	Output 10dB pad out
Input 10dB pad out	Output 10dB pad in
Input 10dB pad in	Output 10dB pad in

Calibration points correspond to 0 to 1050 MHz in 50 MHz steps. Calibration point 0 is at 10 MHz, Calibration point 1 is at 50 MHz. Thereafter calibration points are at 50 MHz intervals to 1050 MHz. Power measurement is corrected for the current point displayed. Adjust point until measurement and applied power correspond.

When setting up the broadband power meter, a calibrated power source is required with, an accuracy of better than 3.5% up to 500 MHz, and 8.5% up to 1 GHz. It is important that the set-up is a calibrated system. Fig 3-2 shows the recommended equipment set-up for broadband power meter calibration.

(a) **The power meter/sensor, the splitter and the two pads associated with these items form the calibrated part of the source.**

(b) **The attenuator pad values are dependent upon the gain of the amplifier used. They should be chosen so that when the signal generator is set to its maximum output level, the power arriving at the sensor is below +25 dBm. i.e. below a level that might damage the sensor.**

1. Access the PWR MTR FLATNESS ANT CAL screen by using the [HELP/SET-UP], *[Calibrate], [2-port Pwr Mtr], [ANT input].*
2. Connect the calibrated power source, set to provide +6 dBm at 10 MHz, to the antenna input socket of the UUT.
3. Ensure that the 10 MHz point is highlighted in inverse video. (The *[↑]* and *[↓]* keys are used to step up and down the table.)
4. Note the power reading being displayed on the bottom of the UUT screen, and using the front panel rotary control, change the data value until the power reading on the UUT is the same as that being applied.
5. Repeat this process for the remaining frequencies in the screen table.
6. Select *[ANT no 10dB]* and repeat the above process, but with the power source set to provide 0 dBm at each of the frequencies in the screen table.
7. Select *[N-type input]*, transfer the calibrated power source to the UUT N-Type socket and carry out the same process, but with the power source set to provide +20 dBm at each of the frequencies in the screen table.
8. Select *[N-type no 10dB]* and repeat the process with the power source set to provide +20 dBm at each of the frequencies in the screen table.
9. Press *[Return], [Store Cal].*
10. Select *[1-port Pwr Mtr].*
11. Select *[0 In 0 out]* and repeat the process with the power source set to provide +20 dBm at each of the frequencies in the screen table.
12. Select *[10 In 0 out]* and repeat the process with the power source set to provide +20 dBm at each of the frequencies in the screen table.
13. Select *[0 In 10 out]* and repeat the process with the power source set to provide + 20 dBm at each of the frequencies in the screen table.
14. Select *[10 In 10 out]* and repeat the process with the power source set to provide +20 dBm at each of the frequencies in the screen table.
15. When all points have been set up press *[Return], [Store Cal].*

Narrowband power meter calibration

There are 41 calibration points for the N type input. Calibration point 0 is at 10 MHz, Calibration point 1 is at 25 MHz. Thereafter calibration points are at 25 MHz intervals to 1000 MHz. Calibration points from 10 MHz to 525 MHz are listed on one 2 column table, those from 550 MHz to 1000 MHz on a second table. When 525 MHz is selected, pressing the *[↓]* key will display the next table with 550 MHz selected. Similarly when 550 MHz is selected, pressing the *[↑] key* will display the previous table with 525 MHz selected.

Power measurement is corrected for the current calibration point displayed. Adjust the calibration point until measurement and applied power correspond.

To achieve optimum accuracy, a calibrated power source should be used along similar lines to that shown in the broadband power meter calibration. The RF amplifier is not required.

1. Select [HELP SETUP], *[Calibrate]*, *[NB pwr Mtr]*.
2. Connect the calibrated power source, set to provide 0 dBm at 10 MHz, to the N type input socket of the UUT.
3. Ensure that the 10 MHz calibration point is highlighted in inverse video. (The / ↑ / and / ↓ / keys are used to step up and down the table.)
4. Note the power reading being displayed on the bottom of the UUT screen, and using the front panel rotary control, change the data value until the power reading on the UUT is the same as that being applied.
5. Repeat this process for the remaining frequencies in the screen table.
6. When all calibration points have been set up, overwrite the previous figures by pressing the *[Return]* key, then the *[Store Cal key]* on the software calibration selection screen.

Module Replacement and Re-calibration

When a faulty module has been replaced with a substitute, adjustment or recalibration may be necessary. The following information offers guidance as to what will be required when replacements are fitted.

This procedure applies when the replacement module has been previously installed in a functional Service Monitor and correctly tested, adjusted and set up. It does not apply to un-tested modules or modules which may have been maladjusted.

Adjustments and re-calibration should be done with care. It is quite possible that the replacement module will have very similar characteristics to the original, such that re-calibration is unnecessary. Follow the normal 2945/2946 calibration procedure.

In the particular case of adjustment (A), it should be possible to adjust it such that re-calibration (9) is not necessary.

Module	Adjustments	Re-calibrations etc.
A2 input mixer	(A)	(6), (7), (9)
A3 2nd/3rd mixer	(A)	(9)
A4/1 10.7 MHz if & log.amp	(A), check (B)	(9)
A6/1 output amp	(C)	(1), (2), (3), (4)
A7/1 1st LO control	None	None.
A8/1 1st LO	(A)	(9)
A9/1 2nd/3rd LO	(A)	(9)
A10 90 MHz swept LO	(A)	(9)
A11/1 input switch & power meter	None	(1), (3), (6), (7), (9)
A15 SSB demod	None	None
B1/2 Audio processor	(C)	(2), (4)

Module	Adjustments	Re-calibrations etc.
B2/1 microprocessor	None	(8). Change EEPROM IC32 (cal. data, Serial. no, and options data)
B3/1 Analogue cellular controller	None	None
B4 600R interface	None	None
B7 GPIB interface	None	None
B12 Memory card interface	None	Set up time/date
OCXO	None	(8)
Sig. Gen. Attenuator	None	(3)
Receiver Attenuator	None	None

Power Supply	None	None

Adjustments

(A)	A4/1	R4 - IF Gain
(B)	A4/1	R119,R122 log. amp
(C)	B1/2	R61 RF level

Calibrations

(1) Output level
- (a) N out Ant in
- (b) BNC output
- (c) N out N in

(2) Output amplifier

(3) Attenuators
- (a) 10 dB pad
- (b) 20 dB pad
- (c) 1st 40 dB pad
- (d) 2nd 40 dB pad

(4) AM level

(5) FM level

(6) 2-Port power meter
- (a) N-type input
- (b) ANT input
- (c) N-type no 10 dB
- (d) ANT no 10 dB

(7) 1-Port power meter
- (a) 0 in 0 out
- (b) 10 in 0 out
- (c) 0 in 10 out
- (d) 10 in 10 out

(8) Frequency standard

(9) Narrow band power meter

Microprocessor board replacement

The EEPROM IC32 on the microprocessor board contains all the options information, serial number, and calibration data. If IC32 can be transferred to the new PCB then no other adjustments or set-ups are needed. If it cannot, then the new board must be configured for use with the particular Service Monitor.

The replacement PCB supplied contains no serial number. To enter the serial number of the Service Monitor, proceed as follows:

CAUTION **The following key presses enable a hidden diagnostics menu. Once in this menu do not press any keys other than those stated below. Incorrect key presses could seriously affect the calibration and operation of the Service Monitor and may result in the unit having to be returned to the factory for re-alignment.**

Use the key sequence [HELP/SETUP], *[Diagnostics]*, [2], [9], [4], [5], [ENTER], *[Diagnostics]*, *[ ]* (4th soft key down on the right), [1], [9], [0], [3], [ENTER], *[ ]* (4th soft key down on the right).

From the displayed screen select *[serial no]*. Use the data keys to key in the nine digits of the serial number, (Ignoring the / or -), then press [ENTER].

Select [HELP/SETUP] and check that the serial number is set correctly.

Turn the Service Monitor off, then on again, and re-check the serial number.

Any valid Systems options must now be enabled.

Select the blue [SYSTEM] key. Press the soft key for the system to be enabled. Press the blue [SYSTEM] key, then use key sequence [2], [9], [4], and [5].

The screen should now be in password entry mode. Key in the relevant password and terminate with the [ENTER] key.

CAUTION **If you do not have records of your passwords then please contact our spares department at the address shown below stating the Service Monitor serial number and the options that need to be re-enabled. They will then verify that the Service Monitor is authorised to have these options and provide you with the relevant passwords.**

Marconi Instruments Ltd.
Spares Department
Longacres House
Norton Green Road
Stevenage
Hertfordshire SG1 2BA
United Kingdom
Telephone: [+44] (1438) 772009
Fax: [+44] (1438) 746423

Reprogramming

All PCBs with reprogrammable memory have been preloaded at the factory. List of part numbers for replacement PCBs and IC components included the complete reprogramming and program confidence checkout.

Chapter 4
INITIAL REPAIR

This chapter is provided to give guidance in rectifying minor faults that might develop in the Service Monitor. To make most of the checks suggested, it will be necessary to remove the instrument cover. Refer to Chapter 2, Access and layout, for guidance on the correct procedure.

Failure to Power Up

The overall connection diagram, Z44991-200 sheet 1 Fig. 7-2, will be found useful when following procedures described below.

If the instrument fails to power up, when connected to an AC supply, make the following checks:

1. Check whether the cooling fan at the rear of the Service Monitor is operating. This gives an indication as to whether or not power is entering the power supply module of the Service Monitor. If the fan is running, the supply and input connections are in order.
2. If the fan is not running, check that the AC supply is 'Live'.
3. Check that the DC range switch is not being obstructed from sitting at either of its two positions.
4. If the plug fitted to the AC supply lead uses a fuse, check that it is not open circuit.
5. Check that the fuse in the AC connector on the rear panel is not open circuit.

If either of these fuses is open circuit, follow the procedures in chapter 5 of this manual, starting from the Pre-Power On Checks.

If the fuse or fuses above are intact, make the following continuity checks with the AC supply lead connected to the Service Monitor:

1. Between the LIVE pin of the AC supply plug and the L contact of connector E to the power supply module.
2. Between the NEUTRAL pin of the AC supply plug and the N contact of connector E to the power supply module.

Continuity should be found, when the POWER ON-OFF switch is in the ON position. If an open circuit is found during these checks, examine the power lead for broken conductor and the power switch for disconnected conductors or faulty switch operation. If the continuity checks are satisfactory, follow the procedures in chapter 5 of this manual, starting from the Power Supply Checks.

If the instrument fails to power up when connected to a DC supply, make the following checks:

1. Check whether the cooling fan at the rear of the Service Monitor is operating. This gives an indication as to whether or not power is entering the power supply module of the Service Monitor. If the fan is running, the supply and input connections are in order.
2. Check that the supply voltage is between 11 V and 32 V.
3. Check that the voltage range switch is in the correct position for the voltage of the supply.
4. Check that the supply voltage is able to deliver approximately 8 A without dropping below 11 V. (Or below 18 V if the range switch is in the 18 to 32 V position). The momentary surge at switch-on is difficult to monitor and a high supply resistance can prevent the power supply unit from starting.
5. Check that the DC supply fuse FS1, located in the fuseholder on the rear panel, is not open circuit.

If the fuse is open circuit, and a replacement becomes open circuit when the Service Monitor is powered up, follow the procedures in chapter 5 of this manual, starting from the Power Supply Checks.

If the fuse is intact, make the following checks:

Check for continuity between the each pole of the DC input connector on the rear panel and the DC input connection on the power supply module.

Check for continuity between the negative pole of the DC input connector on the rear panel and the frame of the Service Monitor.

If an open circuit is found during these checks, examine the connections between the rear panel and the power supply module. Note that the DC supply DOES NOT pass through the POWER ON-OFF- switch.

To check the DC control section of this switch ensure that no power, AC or DC, is connected to the Service Monitor. Disconnect connector D from the power supply module and make the following checks.

1. Check for continuity between contacts 4, 5 and 7 of this connector, referring to the connection diagram for the correct operating sequence.

If these checks fail to locate the cause of the failure follow the procedures in chapter 5 of this manual, starting from the Power Supply Checks.

Self tests

A self-test program is contained within the Service Monitor software. This should be run if the performance of the Service Monitor becomes suspect. Instructions for running the self-test program are in Chapter 2, Installation, of the operating manual.

If a self-test fails, a reason for the failure is displayed. Chapter 5 of this manual contains flowcharts designed to isolate faults to within a small area of the Service Monitor.

Cleaning

Refer to NAVAIR 16-1-540 for procedures for cleaning electronic components.

Electronic Component Repair or Replacement

Refer to NAVAIR 01-1A-505 and/or T.O. 00-25-234/TM 43-0158 for repair or replacement procedures of electronic components.

NOTE

References: NAVAIR 16-1-54Q (Avionics Cleaning and Corrosion Prevention/Control

NAVAIR 01-1A-505 (Installation Practices, Aircraft Electric and Electronic Wiring

T.O. 00-25-234/TM 43-0158 (General Shop Practice Requirements for the Repair, Maintenance, and Test of Electrical Equipment)

Chapter 5
FAULT DIAGNOSIS

Contents

Introduction 5-1
Safety 5-1
Conventions 5-1
Fault finding charts 5-3
Chart Index 5-3

Introduction

These charts have been produced to help in locating any faults the may arise in the operation of the Service Monitor. By selecting the chart most appropriate to the known or suspected fault area, then proceeding through the suggested procedures, the fault will be localised to a small area of the Service Monitor.

Safety

If it is felt that the instrument is unsafe to operate, for any reason, refer to chart 2 (Pre - power on checks). The safety of the Service Monitor is assessed by the procedures described.

Conventions

Component labelling

Within these flowcharts, references to components on printed circuit boards are preceded with the board identity. Individual pins of component or connections are designated with the suffix /x

For example:

A3 IC11/3	refers to pin 3 of IC11 on PCB A3
B2 PLA/2,3,7	refers to pins 2, 3 and 7 of connector PLA on PCB B2

Wiring convention

If a particular printed circuit board is suspected of incorrect operation, an initial check for the presence of the power rail voltages at each board can reduce fault-finding time. The power rail connections within Service Monitor 2947 follow the following convention:

The first pin of the connector carrying the power rails will be 0 V (if present).

The next pin will carry the most negative supply used by on the board.

The other rails used by the board will be routed through successive pins in order of increasing voltage.

For example:

0 V −12 V +5 V +12 V +35 V

All cables carrying the power rail voltages are colour coded as follows:

0 V	Black
−12 V	White/Orange
+5 V	Red/Black
+12 V	Orange/Red
+35 V	Grey/Red

Chart 1
Charts Index

CHARTS INDEX	
CHART 1.	Charts Index
CHART 2.	Pre-Power On Checks
CHART 3.	Major Functions Inoperative after Power Up
CHART 4.	LCD Checks (1 of 2)
CHART 5.	LCD Checks (2 of 2)
CHART 6.	Front Panel Control Checks
CHART 7.	Diagram of Keyboard Matrix Configuration
CHART 8.	Power Supply Checks
CHART 9.	Spectrum Analyser Function Checks
CHART 10.	Receiver Route Checks
CHART 11.	Receiver Input Level Ranging Checks
CHART 12.	Look and Listen Function Checks
CHART 13.	Signal Generator Function Checks
CHART 14.	Signal Generator Route Checks
CHART 15.	Signal Generator Output Level Ranging Checks
CHART 16.	Signal Generator AM Checks
CHART 17.	Signal Generator FM Checks
CHART 20.	A2 Input Mixer Board Checks
CHART 21.	A3 2nd and 3rd Mixer Board Checks
CHART 22.	A4/1 10.7MHz IF Board Checks
CHART 23.	A6/1 Output Amplifier Board Checks
CHART 24.	A7/1 and A8/1 1st LO Generation Checks
CHART 25.	A9/1 1280MHz 2nd LO Generation Checks
CHART 26.	A9/1 and A10 90MHz 3rd LO Generation Checks
CHART 27.	A11/1 Input Switching Board Checks
CHART 28.	A15 SSB Board Checks
CHART 30.	A20/A21 Attenuator Checks
CHART 40.	B1/1 Audio Generator Checks
CHART 41.	B1/1 AM Demodulation Checks
CHART 42.	B1/1 FM Demodulation Checks
CHART 43.	B1/1 Demodulation Filter Checks
CHART 45.	B2/1 Processing of Log Amp Signal Checks
CHART 46.	B2/1 10MHz Clock Generation and Distribution
CHART 50.	C1 / C2 Initial Signal Generator Synthesiser Checks
CHART 51.	C1 / C2 Synthesiser Checks (using 576 - 720MHz VCO)
CHART 52.	C1 / C2 Synthesiser Checks (using 720 - 912MHz VCO)
CHART 53.	C1 / C2 Synthesiser Checks (using 912 - 1152MHz VCO)
CHART 54.	C3 RF Divider Board Checks
CHART 55.	C4 Bypass Board Checks
CHART 56.	C5 BFO Board Checks
CHART 60.	Signal Generator Frequency Derivation Plan
CHART 61.	Signal Generator RF Oscillator Output Frequency Table
CHART 70.	B3/1 Analogue Cellular Option Checks
CHART 71.	B3/1 Microprocessor Checks
CHART 72.	B3/1 Transmit Checks
CHART 73.	B3/1 Receive Checks

Chart 1
Charts Index

Chart 2
Pre-Power on Checks

Associated Circuit Diagrams:
Z44991/131 (2945(A) Interconnections Diagram)
Z44991/200 (2947 Interconnections Diagram)
Z44991/229 (Opt 40 Interconnections Diagram)

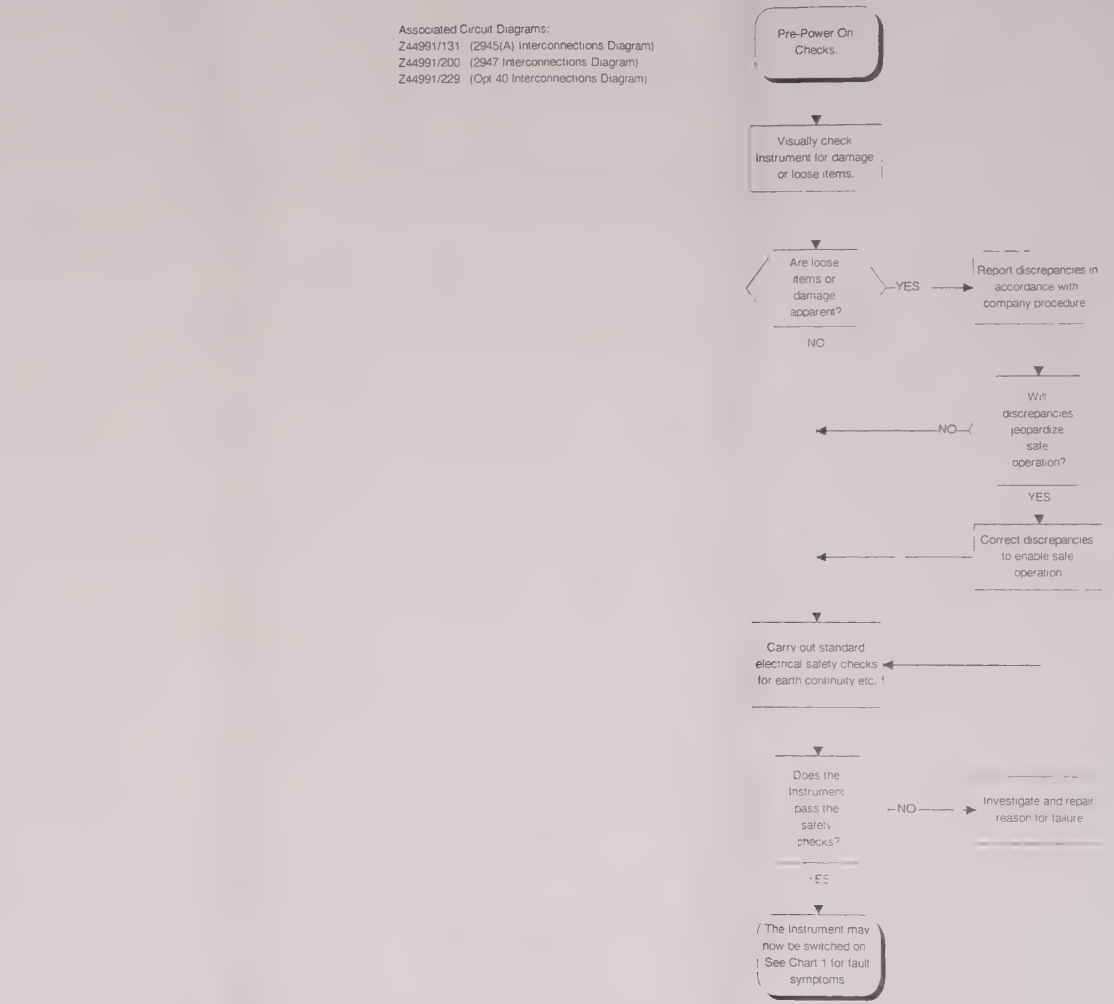

Chart 2
Pre-Power on Checks

Chart 3
Major Functions Inoperative After Power-Up

Associated Circuit Diagrams
Z4499/1/131 (2945(A) Interconnections Diagram)
Z4499/1/200 (2947 Interconnections Diagram)
Z4499/1/229 (Opt.40 Interconnections Diagram)
Z4483/0/110 (B2/1 Microprocessor Board).

NOTE 1
Power Supply Connection Table:

Connector A (To B2/1 - Microprocessor Board)
Pin 1 0V
Pin 2 Pol. Key
Pin 3 12V
Pin 4 +5V
Pin 5 +12V
Pin 6 Batt. Voltage (for measurement on B2/1)
Pin 7 ON/CHARGE LED drive. This is a current drive of 10V o/c or 1.8V when driving the LED in a 2945(A). As there is no ON/CHARGE LED in a 2947 one sees the 'open circuit' voltage of 10V

Connector B (To RF Distribution Board)
Pin 1 0V
Pin 2 -12V
Pin 3 Pol. Key
Pin 4 +5V
Pin 5 +12V
Pin 6 -24V
Pin 7 +24V

Connector C (To Fan)
Pin 1 +12V
Pin 2 0V

NOTE 2
The "REMOTE" LED is driven from B2/1 PLF. Pin 10 supplies +5V and pin 9 is pulled low by B2/1 IC34/2 to drive the LED. This gives approx. 3V on PLF/9 when the LED is active.

NOTE 3
The microprocessor does not appear to be reacting to key presses. If the keyboard is suspected, go to Chart 6 (Front Panel Control Checks)

NOTE 4
The speaker will be operational when demodulating modulated signals in Tx TEST, Dx TEST or Lock and Listen modes, or when an audio input is applied to the AF IN socket (assuming instrument filters etc. are set up correctly). Additionally the last 3 self tests produce a 1KHz tone from the speaker (Ensure volume is turned up).

Note 5
When the instrument powers up, the fan will be heard to start running. The attenuators will rattle to the required state. This sounds like a series of metallic clicks. The display should light to a pale blue colour assuming the contrast and brightness settings are correct. Finally, the relevant LED(s) should light adjacent to the selected input/output port(s).

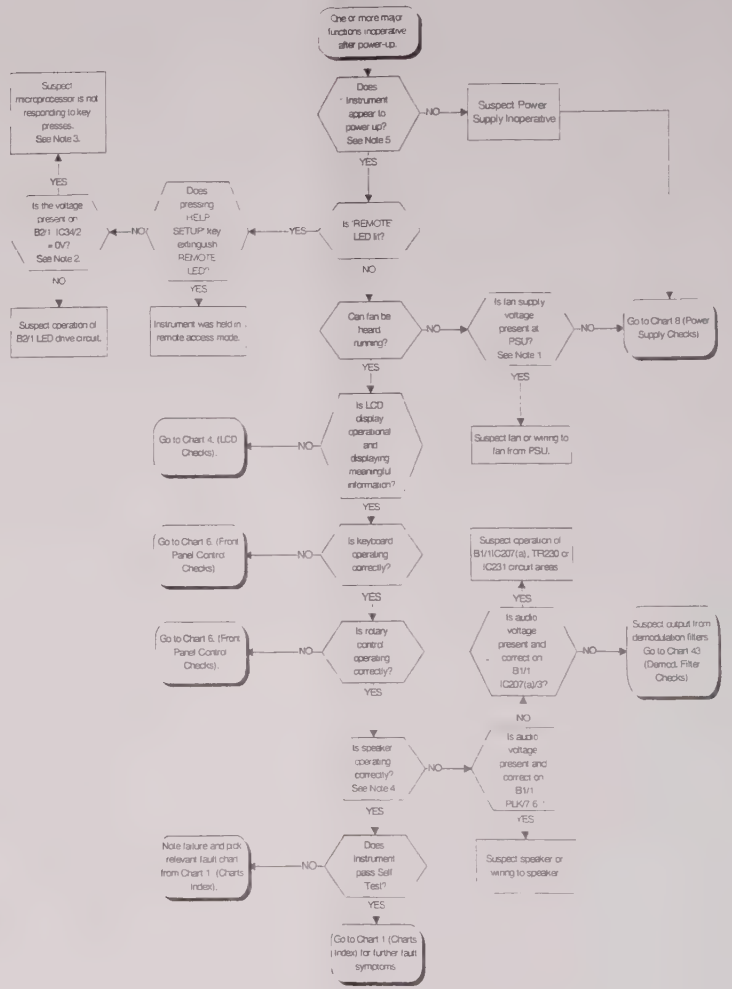

Chart 3
Major Functions Inoperative After Power-Up

Chart 4
LCD Checks (1 of 2)

Associated Circuit Diagrams:
Z44991/131 (2945(A) Interconnections Diagram).
Z44991/200 (2947 Interconnections Diagram).
Z44991/229 (Opt.40 Interconnections Diagram).
Z44830/110 (B2/1 Microprocessor Board).

NOTE 1.
The key press sequence for adjusting the contrast and brightness is as follows:

Press 'HELP/SETUP' key.
Press the grey softkey at the top RHS of screen five times. (This cycles through the five screen brightness settings).
Press the softkey below the top RHS key.
(Screen contrast may then be adjusted by rotating the variable knob).

Using these directions screen settings may be altered even in the event that the current settings are such that no screen text is legible.

NOTE 2.
Contrast voltage appears on B2/1 SKA/3. Approximately -19V gives faint text, while -4V gives bold.

To test Brightness voltages, either check that the screen is seen to cycle through the five brightness settings when the brightness soft key is pressed, or more thoroughly, confirm B2/1 PLR/1 is providing +12V. Then, check action of TR23-25 by loading B2/1 PLR/2 with a known resistance (>3K9 to +12V) and measuring the voltage on PLR/2 generated by the pulldown action of the transistors.

NOTE 3.
The display 'data shift clock' is a square wave changing polarity every 200,200, 200,300nS and can be observed on B2/1 SKA/9.
The display 'start scan pulse' is a positive pulse every 9mS. It can be observed with a storage scope on B2/1 SKA/8.
The gate array, IC55, generates both these signals continuously and their absence indicates that the gate array itself is faulty or inoperative.
The textual 'display data' is provided from screen RAM IC63 under microprocessor control. The 'display data' may be observed on B2/1 SKA/11,12,13. Absence of this data could not only imply a gate array deficiency, but also a micoprocessor or IC63 communication problem

NOTE 4.
TP22 should be at 0 to -5V.
TP24 should be at approximately -20V

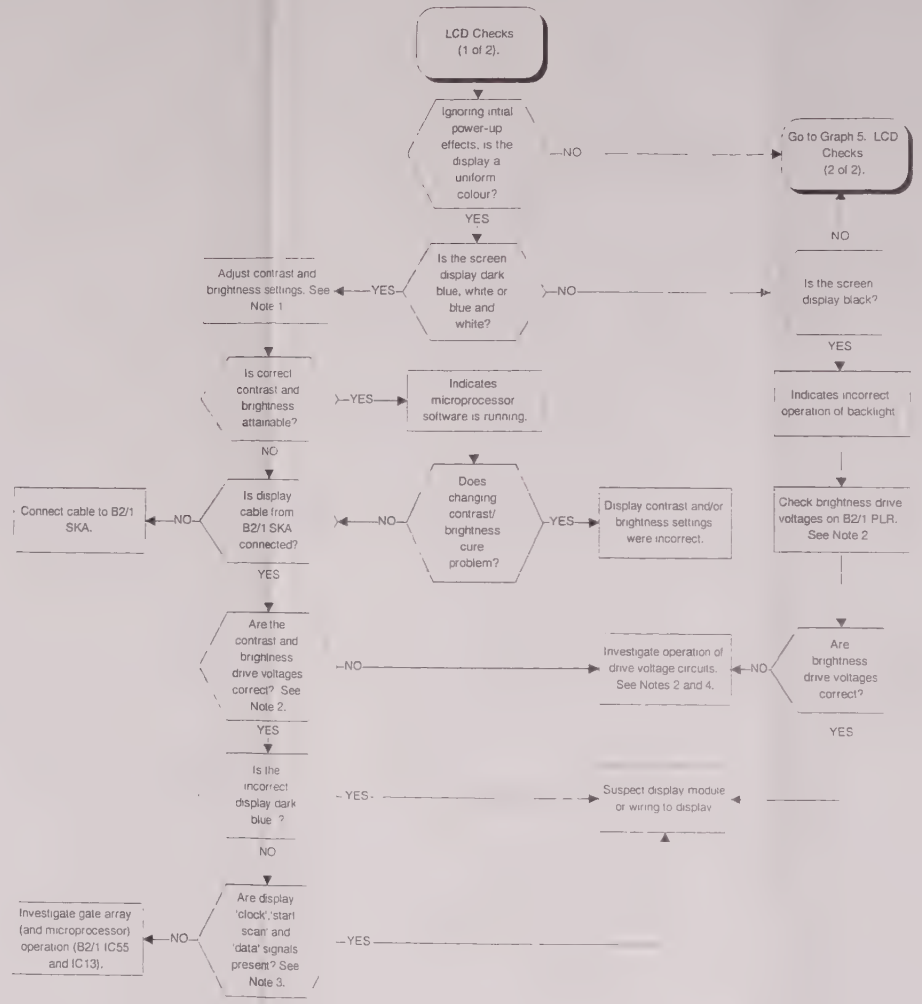

Chart 4
LCD Checks (1 of 2)

Chart 5
LCD Checks (2 of 2)

Associated Circuit Diagrams:
Z44991/131 (2945(A) Interconnections Diagram).
Z44991/200 (2947 Interconnections Diagram).
Z44991/229 (Opt.40 Interconnections Diagram).
Z44830/110 (B2/1 Microprocessor Board).

NOTE 1.
The instrument software can be induced to hang by various hardware problems. Essentially, the instrument will hang in the situation where the microprocessor requests information and does not receive it. This could occur, for example, while the instrument is waiting for interrupts to signify the completion of a measurement, waiting for interrupts from the DSP or during the handshaking used when writing to the EEPROM.

NOTE 2.
The graphics displays are the spectrum analyser trace, barcharts and scope trace. To check if the graphics generation circuitry is causing the problem, enter the 'HELP/SETUP' screen. In this screen, there are no graphics and hence no opportunity for a graphics problem to manifest itself.

NOTE 3.
Graphics are generated by the DSP, (B2/1IC56). Having been generated, they are stored in the 'D.S.P. and graphics' RAM, (B2/1 IC64). From there, the graphics data is passed to the gate array, (B2/1 IC55), which processes the data and passes it on to the display via SKA.
Hence, problems involving graphics generation can be caused by faults with B2/1 IC's13,56,64 and 55 or with communication between the four devices (B2/1 IC57 to IC62).

NOTE 4
Display text (i.e. permanent characters) is retrieved from the screen RAM, (B2/1 IC63), passed to the gate array,(B2/1 IC55), which processes the data and then passes it on to the display via SKA.
Hence, problems involving textual characters can be caused by faults with B2/1 IC's13,55 and 63 or with communication between the three devices.

NOTE 5.
The log amp output is 0 to 5V on B2/1 PLT/2, representing an 80dB range. In 2dB/div. mode, this voltage is magnified (x5) with respect to 5V - i.e. top of screen. Magnification is effected by closing B2/1 IC71(b) (x3.33) and also internally in the DSP (x1.5).

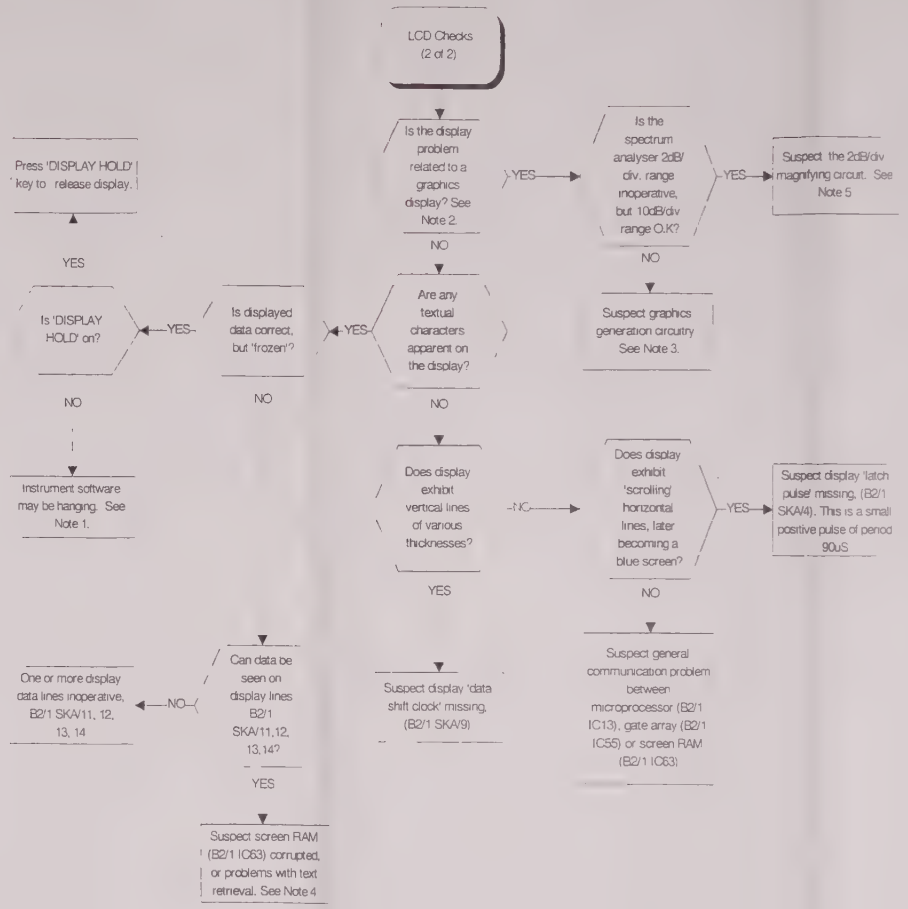

Chart 5
LCD Checks (2 of 2)

Chart 6
Front Panel Control Checks

Associated Circuit Diagrams:
Z44991/131 (2945(A) Interconnections Diagram)
Z44991/200 (2947 Interconnections Diagram)
Z44991/229 (Opt.40 Interconnections Diagram)
Z44830/110 (B2/1 Microprocessor Board)

NOTE 1.
The keyboard forms a matrix described by vertical columns A-H and horizontal rows 1-6. The layout is shown on Chart 6. Pressing a key connects the relevent row to the relevent column. For example, pressing the "HELP/SETUP" key connects row 8 to column H. This results in B2/1 PLH 11 and 26 becoming connected. This then puts B2/1 IC38/4 and IC39/4 low (0.7V) as TR11 is turned on. Other keys are decoded in a similar fashion.

NOTE 2
B2/1 TP10 becomes the keyboard interrupt Low = key pressed and vice versa.

NOTE 3
IC29 gates the keyboard interrupt. IC28 turns off the interrupt after approx. 700uS by microprocessor request.

NOTE 4
B2/1 TP9 is generally busy with various interrupts. However, it is possible to identify the keyboard and rotary interrupts on top of the background activity. There is least background activity when in the HELP/SETUP screen.

NOTE 5
+5V is supplied to the rotary by B2/1 PLH/1. When the rotary is turned, square waves are returned on PLH/5 and 6. The phase relationship of the two square waves indicates the direction of rotation:
PLH/5 lagging = clockwise.
PLH/5 leading = anti-clockwise.

NOTE 6
The speaker VOLUME control signal enters B1/1 on B1/1 PLH/3. It controls the gate voltage of B1/1 TR230, which acts as a variable resistor.
The SCOPE vertical shift control provides a d.c. offset signal to B1/1 IC204(a)/3 via B1/1 PLH/1. This offset is added to the scope signal.
The SQUELCH control voltage enters B1/1 on PLH/2 and leaves directly on PLB/8 to B2/1 PLM/8 after which it is read by B2/1 IC44 A/D converter.

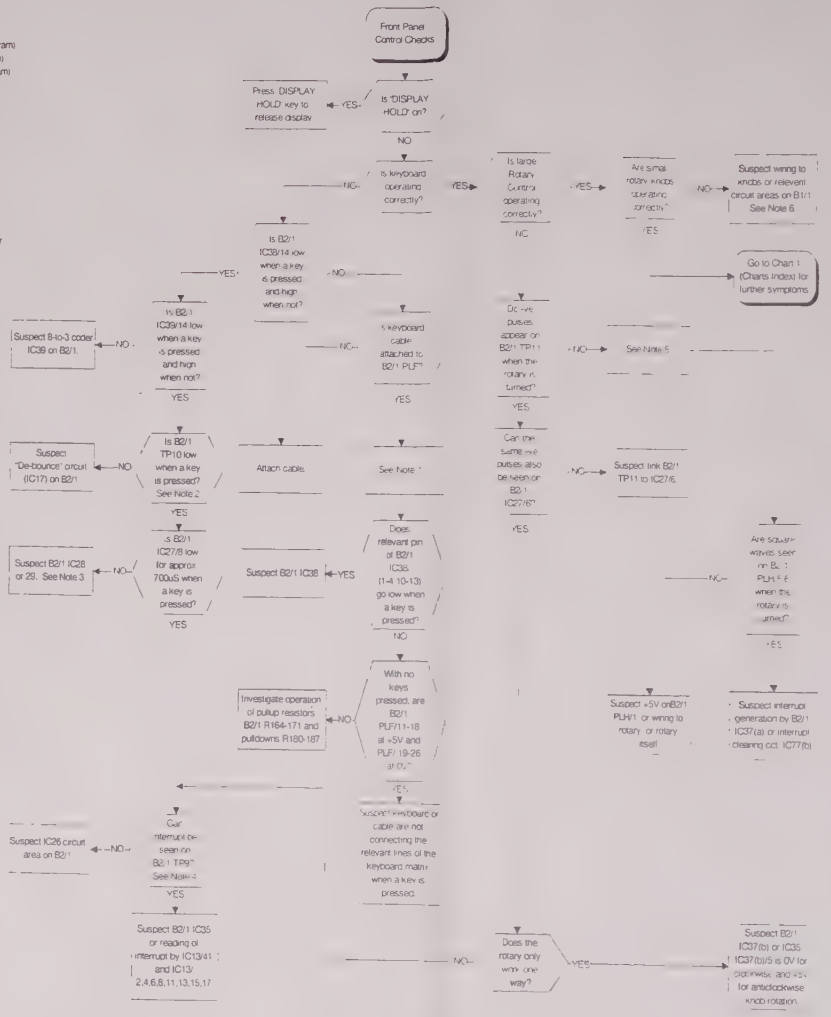

Chart 6
Front Panel Control Checks

Chart 7
Diagram of Keyboard Matrix Configuration

Associated Circuit Diagrams:
Z44991/131 (2945(A) Interconnections Diagram).
Z44991/200 (2947 Interconnections Diagram).
Z44991/229 (Opt.40 Interconnections Diagram).
Z44830/110 (B2/1 Microprocessor Board).

Example:
Key marked in black shorts lines 5 and C together.

Chart 7
Diagram of Keyboard Matrix Configuraton

Chart 8
Power Supply Checks

Associated Circuit Diagrams:
Z44991/131 (2945(A) Interconnections Diagram).
Z44991/200 (2947 Interconnections Diagram).
Z44991/223 (Opt.40 Interconnections Diagram)
Z44991/121 (Power Supply Module)

NOTE 1
Power Supply Connection Table:

Connector A (To B2/1 - Microprocessor Board)
Pin 1 0V
Pin 2 Pol. Key
Pin 3 -12V
Pin 4 +5V
Pin 5 +12V
Pin 6 Batt. Voltage (for measurement on B2/1)
Pin 7 ON/CHARGE LED drive. This is a current drive of 10V o/c or 1.8V when driving the LED in a 2945(A). As there is no ON/CHARGE LED in a 2947 one sees the open circuit voltage of 10V

Connector B (To RF Distribution Board)
Pin 1 0V
Pin 2 -12V
Pin 3 Pol. Key
Pin 4 +5V
Pin 5 +12V
Pin 6 +12V (only with connector on!)
Pin 7 +36V (only with connector on!)

Connector C (To Fan)
Pin 1 +12V
Pin 2 0V
Pin 3 Pol. Key
NOTE 2.
In most cases, the Power Supply will not run up to voltage when all loads are removed. Hence, remove all the loads (Connectors A to C) in turn

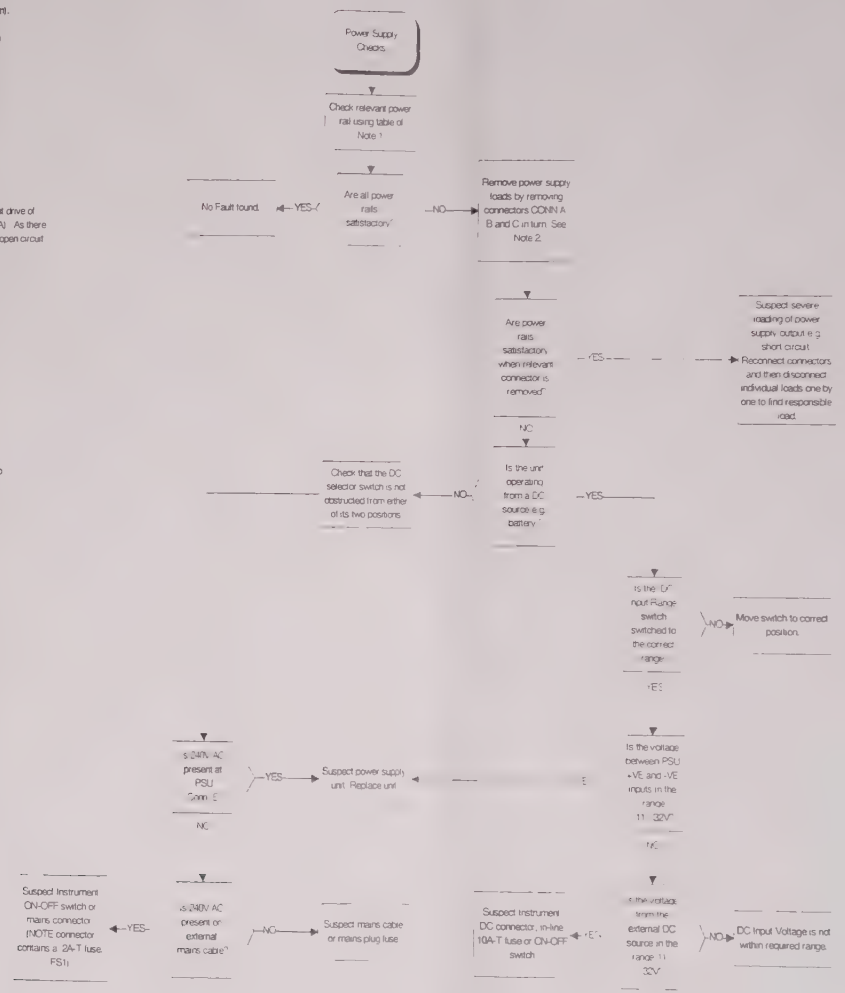

Chart 8
Power Supply Checks

Chart 9
Spectrum Analyzer Function Checks

Associated Circuit Diagrams
Z44991/131 (2945(A) Interconnections Diagram)
Z44991/200 (2947 Interconnections Diagram)
Z44991/229 (Opt.40 Interconnections Diagram)
Z44829/923 (A3 2nd and 3rd Mixer Board)
Z44830/103 (A4/1 10.7MHz IF)
Z44830/110 (B2/1 Microprocessor Board)

NOTE 1
Select SPEC ANA mode. Select required Service Monitor input port. Set Service Monitor RES BW = AUTO.
If ANTENNA port is selected, set Service Monitor REF LEVEL = -20dBm. Apply a CW signal at -20dBm to the ANTENNA port and set the Service Monitor CENTRE FREQ to the frequency of the input signal.
If N-TYPE port is selected set Service Monitor REF LEVEL = +6dBm. Apply a CW signal at +6dBm to the N-TYPE port and set the Service Monitor CENTRE FREQ to the frequency of the input signal.

IT SHOULD BE NOTED that this set up procedure requests a particular SPEC ANA REF LEVEL. If the process of setting this REF LEVEL causes correct functionality to return, it is probable that the instrument is faulty over only part of its input range. In this situation, go to Chart 11 (Receiver Input Level Ranging Checks) to verify correct operation over the entire range.

NOTE 2
For Service Monitor CENTRE FREQ = 111MHz. REF LEVELS as per Note 1 and no input signal.

RES BW	Noise Floor wrt Top of Screen
300Hz	-77dB
3KHz	-74dB
30KHz	-64dB
300KHz	-57dB
3MHz	-45dB

NOTE 3
A low noise floor usually indicates that there is low gain in the receiver, a fault with the A4/1 log amp circuit or a fault with the interpretation of the log amp output voltage on the Microprocessor Board (B2/1).
A high noise floor usually indicates that a local oscillator is unstable, there is a faulty (noisy) device in the receiver path or that an unwanted IF frequency is being generated somewhere in the IF strip.

To investigate both these faults, follow the instructions of Chart 10, looking for correct gains and noise floor levels. Additionally, when looking for unwanted IFs, see if the problem remains when the input signal is removed. If so, follow Chart 10 with no input signal, to see at what point in the I.F. strip the unwanted I.F. is being generated.

NOTE 4
Voltages seen on B2/1 PLN and A4/1 PLA for the different RES BW.

RES	B2/1 PLN/	17	16	15	14
BW	A4/1 PLA/	5	6	7	8
300Hz		0V	0V	0V	5V
3KHz		0V	0V	5V	0V
30KHz		0V	0V	0V	0V
300KHz		5V	5V	0V	0V
3MHz		0V	5V	0V	0V

NOTE 5
The IF bandwidth is initially defined to be approximately 3MHz at the 79.3MHz IF by the tuned loads of A3 TR3 and IC2/3. The bandwidth is then further reduced by selecting one of the five 10.7MHz IF filters on A4/1.

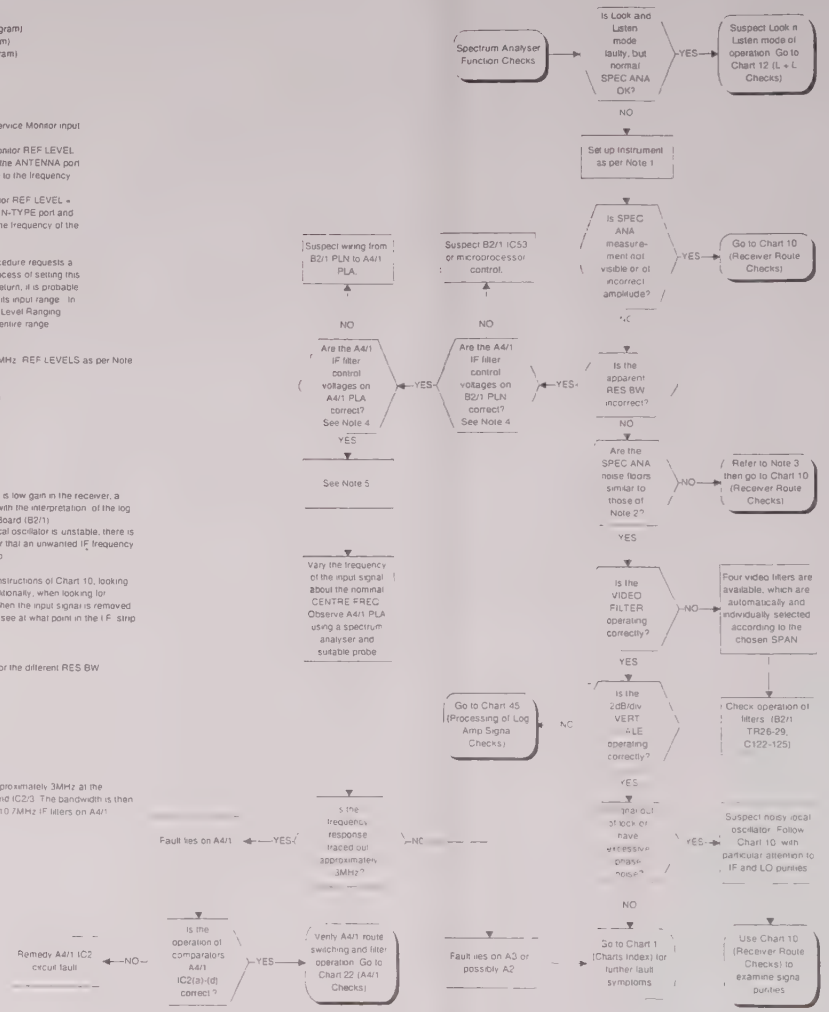

Chart 9
Spectrum Analyzer Function Checks

Chart 10
Receiver Route Checks

Associated Circuit Diagrams:
Z44991/131 (2945(A) Interconnections Diagram)
Z44991/200 (2947 Interconnections Diagram).
Z44991/229 (Opt.40 Interconnections Diagram)
Z44829/922 (A2 Input Mixer Board).
Z44829/923 (A3 2nd and 3rd Mixer Board).
Z44830/103 (A4/1 10.7MHz IF Board).
Z44830/163 (A11/1 Input Switching Board).
Z44830/110 (B2/1 Microprocessor Board).

NOTE 1
The log amp output is 0 to 5V on B2/1 PLT/2, representing an 80dB range. This 'raw' display trace may be observed on an oscilloscope, with a timebase similar to the Service Monitor sweep speed (Initially try 10mS/div). Thus, a signal corresponding to Top of screen will peak at +5V on the oscilloscope.

NOTE 2.
This is not a true 'dBm' measurement, but simply the signal level measured on a spectrum analysar using a zero loss probe.

NOTE 3.
The ANTENNA input connector is routed directly to A11 (bottom side RF tray) via a semi-rigid cable. However, the N-Type connector is routed to A11 via a 20dB pad mounted directly behind the connector. This pad, together with a 6dB splitter on A11 (through which the N-type signal passes), accounts for the 26dB difference in level between the ANTENNA and N-Type input signals.

NOTE 4.
The receiver is being swept over a 1KHz span. Therefore, to observe any of the swept I.Fs, use a wide span and/or wide resolution bandwidth filter on the external measurement spectrum analysar.

NOTE 5.
This is a true dBm measurement.

NOTE 6.
To gain access to this cable in a 2947 or 2945 with Option 40, the sig. gen. RF tray will have to be hinged out. This requires the removal of two RF cables and the memory card board from the tray.

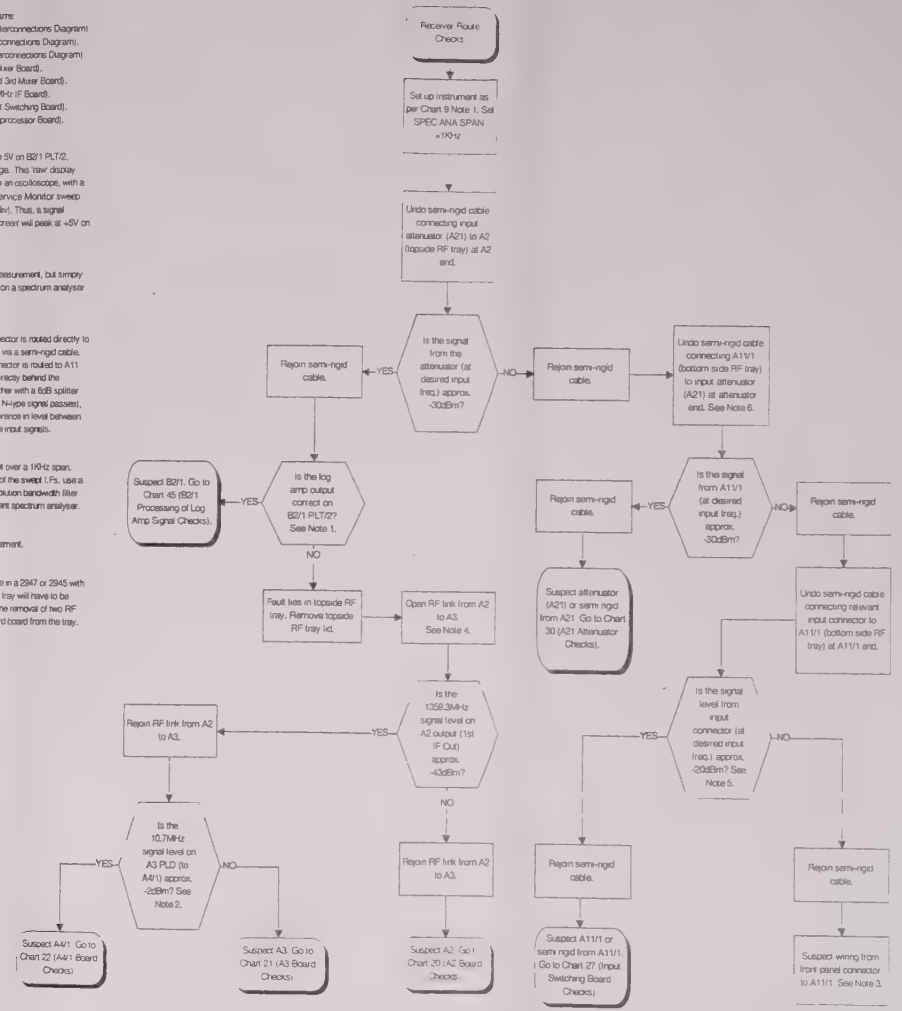

Chart 10
Receiver Route Checks

Chart 11
Receiver Input Level Ranging Checks

Associated Circuit Diagrams:
Z44991/131 (2945(A) Interconnections Diagram).
Z44991/200 (2947 Interconnections Diagram)
Z44991/229 (Opt.40 Interconnections Diagram)
Z44830/163 (A11/1 Input Switching Board)
Z44829/892 (A21 Input Attenuator Board).
Z44829/922 (A2 Input Amplifier Board)

NOTE 1.
Select Service Monitor SPEC ANA mode and required input port (N or ANT). Apply a 100MHz signal to the chosen port at a level of -20dBm if the ANT port is selected, or +5dBm for the N-TYPE port.

NOTE 2.
The sensitivity of the Service Monitor is dictated by the settings of the input attenuators and the 20dB input amplifier. The attenuators comprise of a switchable 10dB pad on A11/1 and switchable 20dB and 40dB pads located together in the Input Attenuator assembly (A21). The 20dB input amplifier can be bypassed to provide a 0dB through route.

The ANTENNA input is routed directly to the receiver. However, the N-TYPE input is routed via a 20dB pad mounted directly behind the connector and a 6dB splitter on A11. Thus, the N-TYPE port is 26dB less sensitive than the ANTENNA port.

In TxTEST mode, the instrument autoranges according to it's measurement of the input power. However, in SPEC ANA mode, the input level ranging is wholly specified by the requested SPEC ANA REF LEV. This can be useful when fault finding as particular input attenuator/ amplifier configurations can be chosen by selecting the relevant REF LEVEL as per Table 1.

TABLE 1. INPUT LEVEL RANGING SCHEME.

S.A. REF LEV / dBm				A11/1
ANTENNA	N-TYPE	INPUT AMP	INPUT ATTN.	10dB PAD
+30	+56	0	-60	0
+20	+46	0	-40	-10
+10	+36	0	-40	0
0	+26	0	-20	-10
-10	+16	0	-20	0
-20	+6	0	0	-10
-30	-4	+20	-20	0
-40	-14	+20	0	-10
-50	-24	+20	0	0

NOTE 3.
Measure the signal level from the Input Attenuator (A21). This measurement point FOLLOWS the -10dB pad on A11 and the Input Attenuator, but PRECEDES (and is therefore unaffected by) the input amplifier. Vary the SPEC ANA REF LEV and check that the input signal is attenuated according to columns 4 and 5 of Table 1. For example, for a REF LEV of 0dBm (with ANT port selected), the measured signal should be -20dBm - 20dB - 10dB = -50dBm. Remember the extra 26dB attenuation on the N-TYPE port ! (See Note 2, para 2)

NOTE 4.
Measure the signal level on A2 C11 with a zero loss probe. This measurement point FOLLOWS all the attenuators AND the input amplifier. Vary the SPEC ANA REF LEV and check that the input signal is modified according to columns 3,4 and 5 of Table 1. For example, for a REF LEV of -30dBm (with ANT port selected), the measured signal should be -20dBm +20dB - 20dB - 0dB = -20dBm. Remember the extra 26dB attenuation on the N-TYPE port ! (See Note 2, para 2)

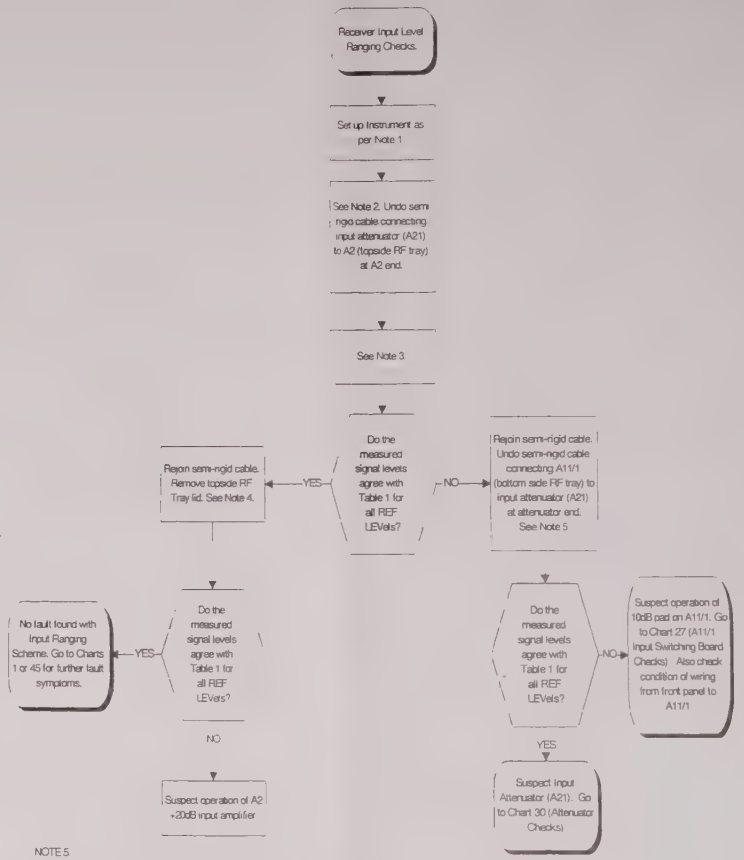

NOTE 5.
Access to the cable will require the sig. gen. RF tray to be hinged out. Measure the signal level from the Input Switching Board (A11/1). This measurement point FOLLOWS the -10dB pad on A11/1, but PRECEDES (and is therefore unaffected by) the Input Attenuator and input amplifier. Vary the SPEC ANA REF LEV and check that the input signal is attenuated according to column 5 of Table 1. For example, for a REF LEV of 0dBm (with ANT port selected), the measured signal should be -20dBm - 10dB = -30dBm. Remember the extra 26dB attenuation on the N-TYPE port ! (See Note 2, para 2)

Chart 11
Receiver Input Level Ranging Checks

Chart 12
Look and Listen Function Checks

Associated Circuit Diagrams:
Z44991/131 (2945(A) Interconnections Diagram).
Z44991/200 (2947 Interconnections Diagram).
Z44991/229 (Opt.40 Interconnections Diagram).
Z44830/097 (A9/1 2nd and 3rd LO Board).
Z44829/930 (A10 90MHz Swept LO Board).
Z44830/116 (B1/1 Audio Processor Board).

NOTE 1.
Select SPEC ANA Look and Listen mode with SPAN=1MHz and RES BW=AUTO. Remove topside RF tray lid.

NOTE 2.
It is assumed that the 90MHz LO works in normal SPEC ANA mode (i.e. is at a level of 0dBm on A10 PLC at a fixed frequency of 90MHz). If not, go to Chart 26 (3rd LO Checks).

The principle of Look and Listen mode is that the 90MHz 3rd LO is swept. The operation is split into two phases. In the first, the A10 PLA/6 sweep control line opens switch A10 IC3(a). This breaks the phase locking of the VCO and makes it run free. Simultaneously, the A10 PLE ramp signal drives the VCO varactor directly to modulate the VCO over the required span. In the second phase, both switches A10 IC3(a) and (d) close, thereby allowing the VCO to lock back up to the 90MHz reference signal from A9/1,(on A10 PLB) and the sweep signal to the varactor is a steady voltage.
Therefore, if normal SPEC ANA mode is O.K. (which only operates in phase two), there must be a problem with the unlocking of the loop, or modulation of the A10 D1 varactor.

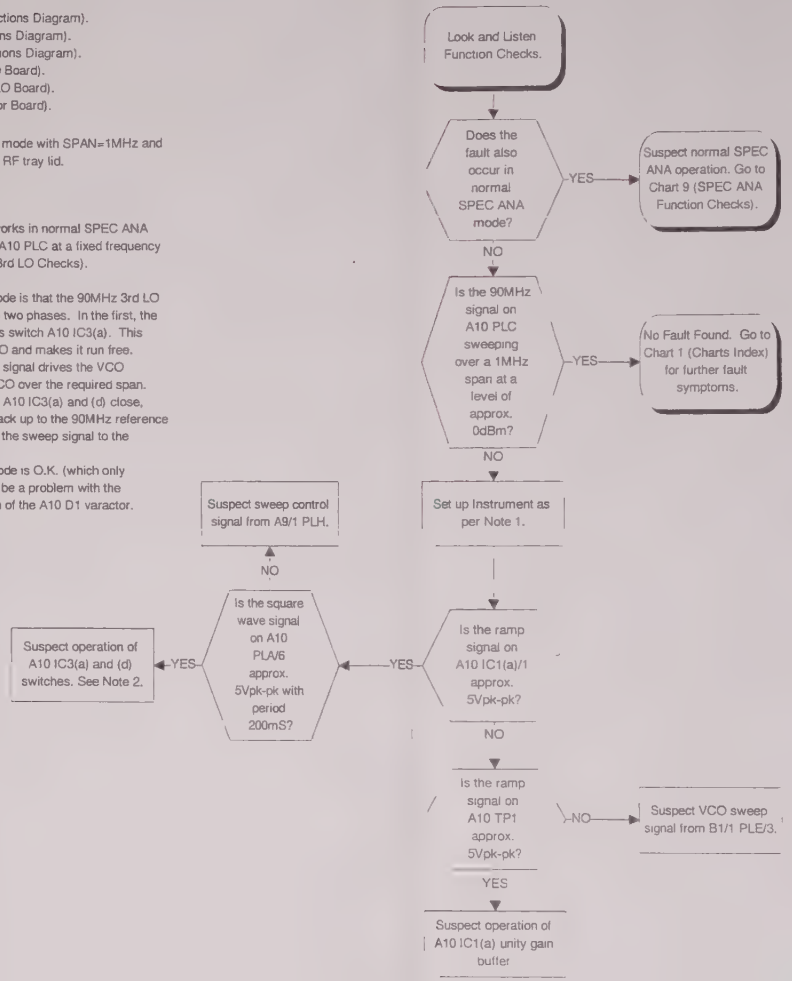

Chart 12
Look and Listen Function Checks

Chart 13
Signal Generator Function Checks

Associated Circuit Diagrams
Z44991/131 (2945(A) Interconnections Diagram).
Z44991/200 (2947 Interconnections Diagram).
Z44991/229 (Opt.40 Interconnections Diagram).
Z44829/891 (A20 Output Attenuator)
Z44829/925 (A6/1 Output Amplifier Board)
Z44830/097 (A9/1 2nd and 3rd LO Board)
Z44830/163 (A11/1 Input Switching Board)
Z44830/113 (C1 RF Generator Control Board)
Z44830/104 (C2 RF Oscillator Board)
Z44830/105 (C3 RF Divider Board)
Z44830/106 (C4 Bypass Board).
Z44830/107 (C5 BFO Board).
Z44830/108 (C6 RF Tray Interconnections Board).

NOTE 1.
Select Rx TEST mode. Select desired Service Monitor output port. Set desired RF GEN frequency. Ensure RF GEN is ON.
If BNC output is selected, set Service Monitor RF GEN LEVEL = 0dBm.
If N-TYPE port is selected, set Service Monitor RF GEN LEVEL = -26dBm

IT SHOULD BE NOTED that this set up procedure requests a particular RF GEN output level. If the process of setting this test level causes correct functionality to return, it is probable that the instrument is faulty over only part of its output level range. In this situation, go to Chart 15 (Signal Generator Output Level Ranging Checks) to verify correct operation over the range.

NOTE 2.
The signal generator output can be derived from one of three VCO's. One VCO (576-720MHz) is located on C2 and the other two are located on AF3, a daughterboard to C2 (720 to 912MHz and 912-1152MHz). The relevant VCO output frequency may then remain the same or be divided by two, four or eight on C3 to obtain signal generator frequencies below 576MHz, before being filtered. Filtering also occurs on C3 and is performed by a combination of eight low pass filters. Finally, for output frequencies below 72MHz a further BFO mixing process takes place. C4 routes the filtered signal to C5 to be mixed with a quarter of the 1280MHz LO (320MHz), before passing to the A6/1 Output Amplifier Otherwise, for output frequencies above 72MHz, C4 routes the filtered signal directly to A6/1
The table located in Chart 60 summarises how the various frequency bands are derived in this way.

For example, to obtain output frequencies between 100MHz and 113.999999MHz the output from the 720-912MHz VCO is divided by eight and subsequently filtered by the 140, 280 and 575MHz low pass filters. The output signal is then routed directly to the Output Amplifier on the C4 BFO bypass path.

The table can be an extremely effective way of determining a fault location within the signal generator system. By observing which frequency band(s) are faulty, one can determine the common hardware to the band(s) as being suspect.

For example, if bands 114-143.999999MHz, 228-287.999999MHz, 456-575.999999MHz and 912-1050MHz are faulty, the 912- 1152MHz VCO can be suspected.

NOTE 3.
Follow Chart 14, with particular reference to signal frequencies

NOTE 4
Follow Chart 14, with particular reference to signal purities

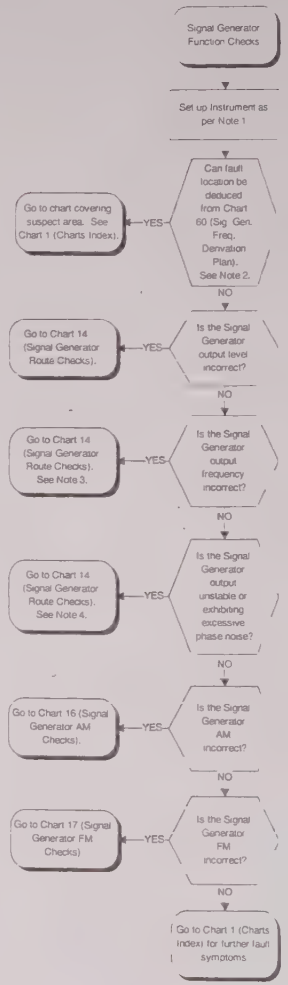

Chart 13
Signal Generator Function Checks

Chart 14
Signal Generator Route Checks

Associated Circuit Diagrams:
Z44991/131 (2945(A) Interconnections Diagram).
Z44991/200 (2947 Interconnections Diagram).
Z44991/229 (Opt.40 Interconnections Diagram).
Z44829/891 (A20 Output Attenuator).
Z44829/925 (A6/1 Output Amplifier Board).
Z44830/097 (A9/1 2nd and 3rd LO Board).
Z44830/163 (A11/1 Input Switching Board).
Z44830/113 (C1 RF Generator Control Board).
Z44830/104 (C2 RF Oscillator Board)
Z44830/105 (C3 RF Divider Board).
Z44830/106 (C4 Bypass Board).
Z44830/107 (C5 BFO Board).
Z44830/108 (C6 RF Tray Interconnections Board).

NOTE 1.
The signal from C4 is at the RF GEN FREQ requested on the front panel. The level of the signal is approximately -16dBm.

NOTE 2.
Approximate signal levels (at desired output frequency) from A11/1:
N-TYPE output port selected: -6dBm.
BNC output port selected: 0dBm.

NOTE 3.
Remove the output attenuator from the chassis by unscrewing the two retaining screws and the SMA connection to A11/1 (bottom RF tray). Do not remove input semi-rigid cable. Suitably support attenuator for next test.

NOTE 4.
The signal from C3 to C4 is at the requested RF GEN FREQ for FREQ's above 72MHz. For FREQ's below 72MHz, the signal frequency is 320MHz above the requested RF GEN FREQ. The signal level is approx. -2dBm

NOTE 5
The signal from C4 to C5 is 320MHz above the requested RF GEN FREQ for FREQ's below 72MHz. The signal level is approx. -3dBm.

NOTE 6.
The signal from C5 to C4 is at the requested RF GEN FREQ and at a level of approx. -13dBm.

NOTE 7.
The signal generator output is derived from one of three VCO's on C2(/AF3). Its derivation can require division on C3. The frequency of the 'OSC FREQ' signal from C2 to C3 can be identified using the table of Chart 61. The signal level from C2 to C3 is approx. +8dBm

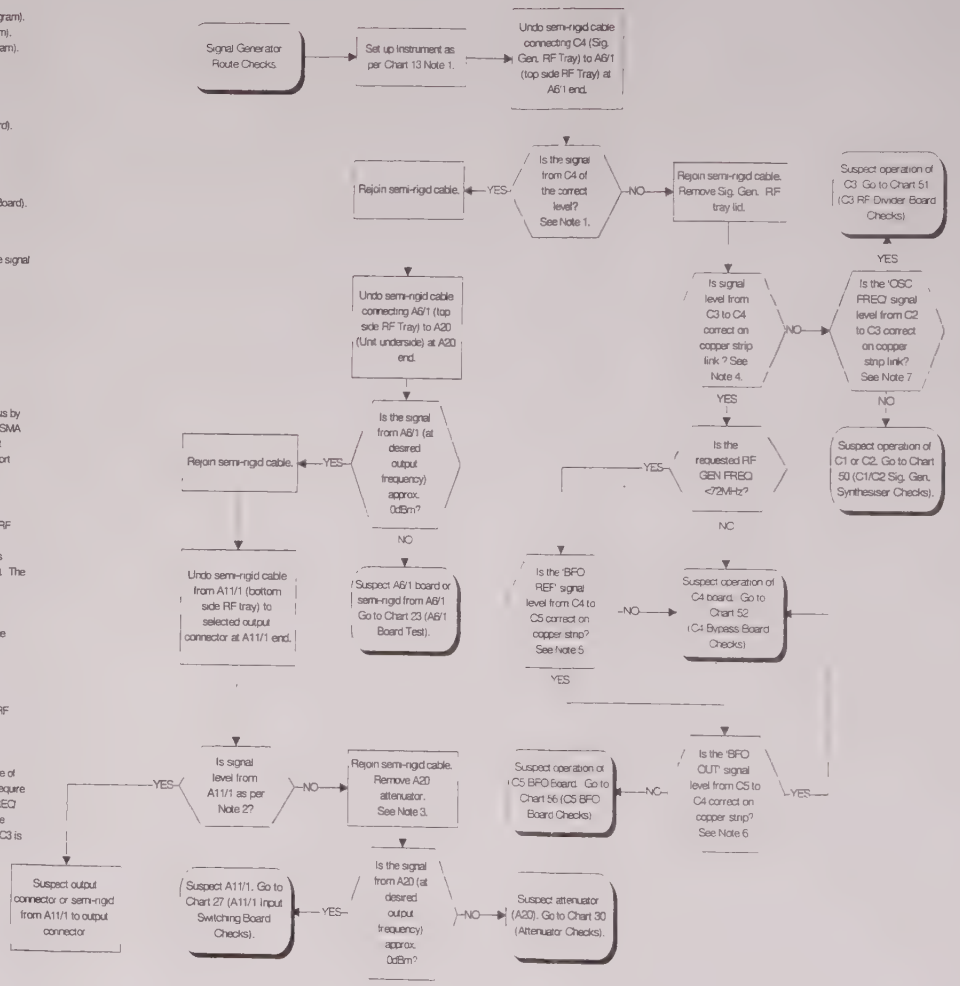

Chart 14
Signal Generator Route Checks

Chart 15
Signal Generator Output Level Ranging Checks

Associated Circuit Diagram:
Z44991/131 (2945(A) Interconnections Diagram).
Z44991/200 (2947 Interconnections Diagram)
Z44991/229 (Opt.40 Interconnections Diagram).
Z44829/891 (A20 Output Attenuator).
Z44829/925 (A6/1 Output Amplifier Board).
Z44830/163 (A11/1 Input Switching Board).

NOTE 1.
Select Rx TEST mode. Select required output port. Set desired RF GEN frequency. Ensure RF GEN is on.

The signal generator output level is dictated by three factors. These are the A11/1 output 10dB pad, the A20 Output Attenuator and the variable gain of the A6 Output Amplifier. The Output Amplifier provides a fine level adjustment over an approximate 10dB range (+5dBm to -5dBm on the A6 output). The A6/1 Output Amplifier and A20 Output Attenuator are both software calibrated and the cals should be observed for anomalies before the hardware is condemned. Access to the cals requires a password.

The N-TYPE port contains an integral 20dB pad and is routed via a 6dB splitter on A11/1. Hence, the maximum output level from the N-TYPE port is 26dB less than that from the BNC output port.

NOTE 2.
On a calibrated instrument, the output level from A6/1 is between approx. -5dBm and +5dBm. On an uncalibrated instrument, the level may be up to 5dB higher than this. Using the rotary knob, vary the signal generator output level over its whole range and observe the signal from A6/1 (at the chosen output frequency) cycling through its 10dB range.

NOTE 3.
The incorrect output from A6/1 may be due to an A6/1 problem, or a fault earlier in the signal generator chain. If A6/1 is suspected, go to Chart 23 (A6/1 Checks). Otherwise, go to Chart 14 (Signal Generator Route Checks)

NOTE 4.
Having hinged the Signal Generator RF tray out from the underside of the instrument, unscrew the two plain slotted screws in the top of the attenuator. Then, undo the SMA connection to A11/1 in the bottom side RF tray. This releases the attenuator from the chassis. With the semi-rigid cable from A6/1 still connected, connect a spectrum analyser to the disconnected SMA port (was to A11/1).
CONSULT ACCESS AND LAYOUT CHAPTER 2 TO REFIT ATTENUATOR.

NOTE 5
The signal level from A20 is dictated by the settings of the A6/1 Output Amplifier and, of course, the A20 Output Attenuator itself. These settings are dictated by the requested output level. Use the variable knob to alter the RF GEN LEVEL and check that the output from A20 agrees with columns 3 and 4 of Table 1.
For Example, for requested output of -45dBm on BNC port, expect to see +5dBm - 40dB = -35dBm from A20

TABLE 1.

REQUESTED O/P LEVEL /dBm BNC	N-TYPE	A6/1 O/P LEVEL/dBm	A20 ATTN STATE	A11/1 10dB PAD STATE
+5	-21	+5	0	0
-5	-31	+5	0	-10
-15	-41	+5	-20	0
-25	-51	+5	-20	-10
-35	-61	+5	-40	0
-45	-71	+5	-40	-10
-55	-81	+5	-60	0
-65	-91	+5	-60	-10
-75	-101	+5	-80	0
-85	-111	+5	-80	-10
-95	-121	+5	-100	0
-105	-131	+5	-100	-10
-115	-141	-5	-100	-10

NOTE 6.
At the front panel, the output signal has undergone processing by A6/1, A20 and the 10dB pad on A11/1, as per columns 3, 4 and 5 of Table 1

NOTE 7
Inspect (or test) cabling from A11/1 to front panel connector. If no fault is found, proceed to Chart 27 (A11/1 Board Checks), paying particular attention to the operation of the 10dB pad.

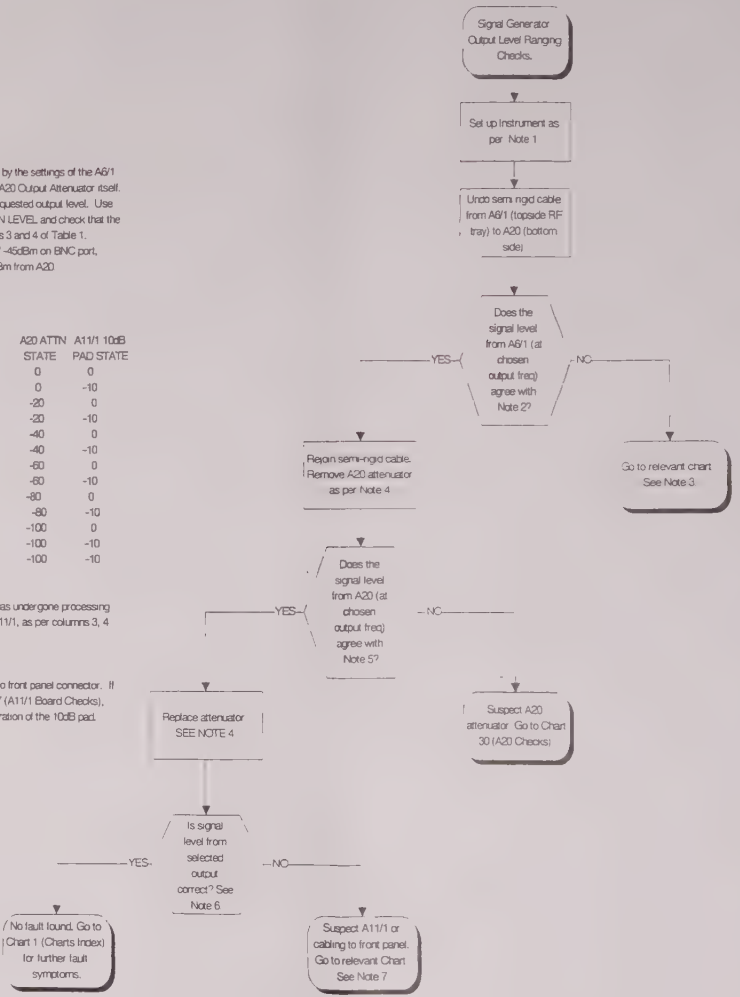

Chart 15
Signal Generator Output Level Ranging Checks

Chart 16
Signal Generator AM Checks

Associated Circuit Diagrams:
Z44991/131 (2945(A) Interconnections Diagram).
Z44991/200 (2947 Interconnections Diagram).
Z44991/229 (Opt.40 Interconnections Diagram).
Z44829/925 (A6/1 Output Amplifier Board).
Z44830/116 (B1/1 Audio Processor Board - Sheets 3+4).

NOTE 1.
Select Rx TEST mode. Select desired Service Monitor output port. Set desired RF GEN frequency. Ensure RF GEN is ON.
If BNC output is selected, set Service Monitor RF GEN LEVEL = 5dBm.
If N-TYPE port is selected, set Service Monitor RF GEN LEVEL = -21dBm.
Set required AM MOD FREQ and MOD LEVEL. (Only use a single mod. generator). Turn PRE-EMPHASIS off.

IT SHOULD BE NOTED that this set up procedure requests particular RF LEVELS. If setting these levels causes correct functionality to return, it is probable that the Instrument is faulty over only part of its range. This may imply an Output Amp Linearity or AM calibration problem, or perhaps compression of the RF signal.

NOTE 2.
The RF level and AM drive signal is generated on B1/1. The signal leaves B1/1 on B1/1 PLD/7 and is applied to A6/1 PLB via a single feedthrough located in the side of the topside RF tray. For a nominal -20dBm RF input level (see Chart 13, Note 1), A6/1 provides an RF output level between -5dBm and +5dBm given a DC input on A6/1 PLB between approx. 0.7V and 2V respectively. Note, however, the control voltage is software calibrated and so will differ between Instruments. AM is obtained by modulating this DC control voltage. 99% AM modulates the drive signal between double its DC value and 0V. For less than 99% AM, the modulation on the drive signal is scaled accordingly. Hence, for a +5dBm output signal, with 99% sinusoidal AM, the control voltage will be approximately a 4Vpk-pk sine wave biased at 2V DC. The drive signal can be measured on the A6/1 feedthrough (located alone on side of tray) without removing the RF tray lid.

NOTE 3.
The signal on TP3 should be approximately one fifth of that measured on the A6/1 PLB feedthrough.

NOTE 4.
The signals on TP7 and TP8 are the output from audio generators 1 and 2 consecutively. For 100% AM the relevent testpoint will carry a 5.6Vpk-pk sinewave.

NOTE 5.
The audio generators based around B1/1 IC1 and IC2 provide the raw modulation drive signals. These signals are combined at B1/1 IC23(c), which has a gain of approximately two. The signal is then attenuated at B1/1 IC25 by an amount dictated by the AM Level calibration. This acheives correct AM linearity over the dynamic range of A6/1. The signal is then summed with a preset DC voltage set by R64 (which sets maximum RF level obtainable), before being attenuated further by IC27. IC27 applies the Signal Generator Output Level Linearity calibration.
To satisfactorily test the operation of the various calibration DACS, it is often easiest to reset the calibration figures to,say, full scale values of 4095 (but do NOT press SAVE CAL!). Having done this, the DACS should have unity gain. To restore the original calibration figures, simply switch the Instrument off and back on.

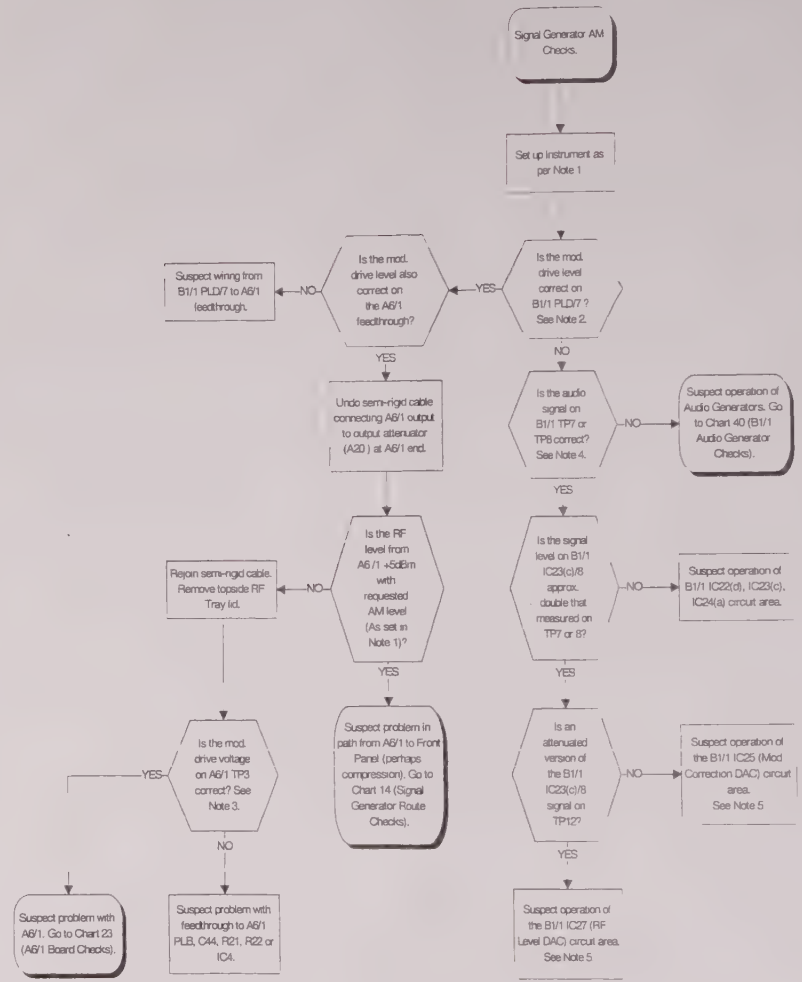

Chart 16
Signal Generator AM Checks

Chart 17
Signal Generator FM Checks

Associated Circuit Diagrams:
Z4491/131 (Interconnections Diagram)
Z4483/116 (B1/1 Audio Processor Board - Sheets 3+4).
Z4483/113 (C1 RF Generator Control Board)
Z4483/104 (C2 RF Oscillator Board)

NOTE 1
Select Rx TEST mode. Select desired Service Monitor output port. Set desired RF GEN frequency. Ensure RF GEN is ON.
If BNC output is selected, set Service Monitor RF GEN LEVEL = 5dBm.
If N-TYPE port is selected, set Service Monitor RF GEN LEVEL = -2dBm.
Set required FM MOD FREQ and MOD LEVEL. (Only use a single mod. generator). Turn PRE-EMPHASIS off.

NOTE 2.
Two FM drive signals are generated on B1/1. One modulates the C2 Signal Generator VCO's. It leaves B1/1 from B1/1 PLD/1 and goes to C2 PLG/2. The other drive signal is applied to the fractional-N divider control circuitry on C1. It leaves B1/1 from PLD/4 and goes to C1 PLB. The varactor drive signal on B1/1 PLD/1 varies between 0V and approx. 1Vpk-pk. Its value depends on which B1/1 FM range has been selected by the microprocessor and also the FM software calibration. If only a cursory check is required, simply ensure that the B1/1 PLD/1 signal level varies between approx. 0.5V and 1V as the FM deviation is varied. If a more accurate check is required, observe the two FM Control Tables in the 'C2 Frequency Modulation' section of the Chapter 1 Technical Description. These tables not only detail the C2 and B1/1 FM attenuation levels, but also how these attenuation levels must be reduced to compensate for when the VCO outputs are later divided to give the lower signal generator output frequences. The fractional-N divider drive signal on B1/1 PLD/4 varies between 1V and 2Vpk-pk and operation can be tested as above for the C2 drive.

NOTE 3.
The signal generator output is derived from one of three VCO's on C2//AF3). Its derivation can require division on C3. The frequency of the 'OSC FREQ' signal from C2 to C3 corresponding to the desired RF GEN FREQ can be identified using the table of Chart 61.
To check the RF level from C2, it will be convenient to temporarily turn off the FM modulation, to enable the carrier level to be measured.
If only a cursory FM check is required, simply ensure that modulation on the C2 'OSC FREQ' signal is present and varies as the FM deviation is varied. If a more accurate check is required, observe, using Chart 60, which C3 divider ratio is operational for the requested RF GEN FREQ and hence how much greater the FM deviation will be on the pre-divided C2 'OSC FREQ' signal. For example, for RF GEN FREQ = 200MHz, the C2 'OSC FREQ' signal will be divided by four on C3. Hence, the C2 'OSC FREQ' signal will be 800MHz. If then 50KHz deviation is required on the Signal Generator, the C2 'OSC FREQ' signal will have 200KHz of deviation.

NOTE 4.
The signals on TP7 and TP8 are the outputs from audio generators 1 and 2 respectively. For 75KHz FM deviation the relevent testpoint will carry a 4.2Vpk-pk sinewave.

NOTE 5.
The C2 PLG/2 varactor modulation drive only has an effect outside the PLL bandwidth, as within the PLL bandwidth the loop attempts to negate the disturbance. Hence, the (C1 PLB) modulation drive to the C1 frac-N divider is used to ensure modulation rates within the loop bandwidth are achieved. At a mod. frequency of 200Hz only the C1 PLB divider drive has an effect as it is well within the loop bandwidth. Hence, if all FM deviations are correct at a 200Hz mod. frequency, the C1 PLB drive is working. Conversely, if deviation errors are experienced at high modulation rates, or errors only occur in a particular deviation range (as specified in NOTE 2), the C2 PLG/2 varactor drive can be suspected.

NOTE 6.
The audio generators based around B1/1 IC1 and IC2 provide the raw modulation drive signals. These signals are combined at B1/1 IC23(c), which has a gain of approximately 0.35. The signal is then attenuated at B1/1 IC25 by an amount dictated by the FM LEVEL calibration. This calibration caters for the variation of the C2/AF3 VCO sensitivities vs. RF frequency. To maximise the B1/1 IC28 FM level resolution, the varactor drive from B1/1 PLD/1 is always maintained between 0.5V and 1V. To gain further flexibility, the drive is then attenuated again on C2 to provide the coarse ranges. The signal is attenuated by B1/1 IC28 by factors of 1 1/2, 1/4 and 1/8 and by C2 R64, R65, R66, R69 and R70 by 1 1/8 and 1/64 1/512 to obtain the necessary ranges. The resultant varactor voltage on C2 TP9 is always between 0V and approx. 0.8Vpk-pk and changes within the ranges specified in the the two tables in the 'C2 Frequency Modulation' section of the Chapter 1 Technical Description.
If it is required that the operation of the various calibration DACS are tested, it is often easiest to set the calibration figures to, say, full scale values of 4095 (but do NOT press SAVE CAL !). Having done this, the DACS should have unity gain. To restore the original calibration figures, simply switch the instrument off and then back on. Access to the calibration figures requires a password.

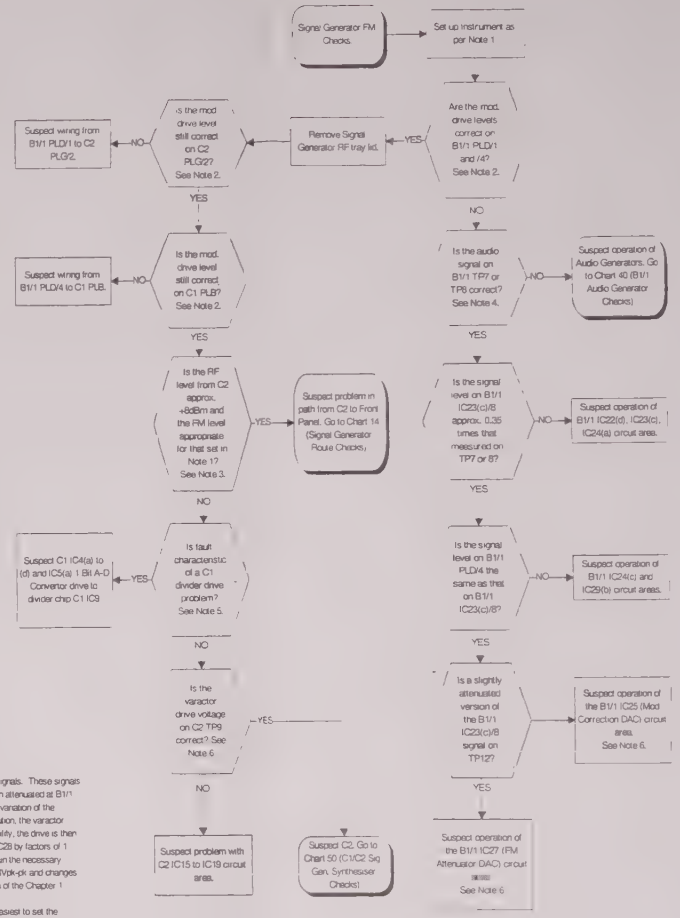

Chart 17
Signal Generator FM Checks

Chart 20
A2 Input Mixer Board Checks

Associated Circuit Diagrams:
Z44991/131 (2945(A) Interconnections Diagram)
Z44991/200 (2947 Interconnections Diagram)
Z44991/229 (Opt.40 Interconnections Diagram)
Z44829/922 (A2 Input Mixer Board).
Z44830/112 (A8/1 1st LO Board)

NOTE 1.
This is not a true 'dBm' measurement, but simply the signal level measured on a spectrum analyser using a zero loss probe.

NOTE 2.
The 1st LO frequency is 1359.3MHz above the REF FREQ set on the spectrum analyser and has a level of +7dBm

NOTE 3.
If the ANTENNA port is selected, change the input signal level to -50dBm and set Service Monitor REF LEV = -50dBm
If the N-TYPE port is selected, change the input signal level to -24dBm and set Service Monitor REF LEV = -24dBm.

NOTE 4.
The input stage of A2 consists of an input amplifier (A2 IC1), which is bypassed (by A2 D3,4) when the REF LEV set is greater than -30dBm (ANTENNA input selected) or -4dBm (N-TYPE input port selected).
The switching is effected by diodes (D2,3,4 and 5) and controlled by the gain switching circuit (based on TR1, 2, 3 and 4). The expected control voltages are printed on the circuit diagram.

NOTE 5.
The receiver is being swept over a 1KHz span. Therefore, to observe any of the swept IFs, or 1st LO, use a wide span and/or wide video filter on the external measurement spectrum analyser, to achieve a stable reading.

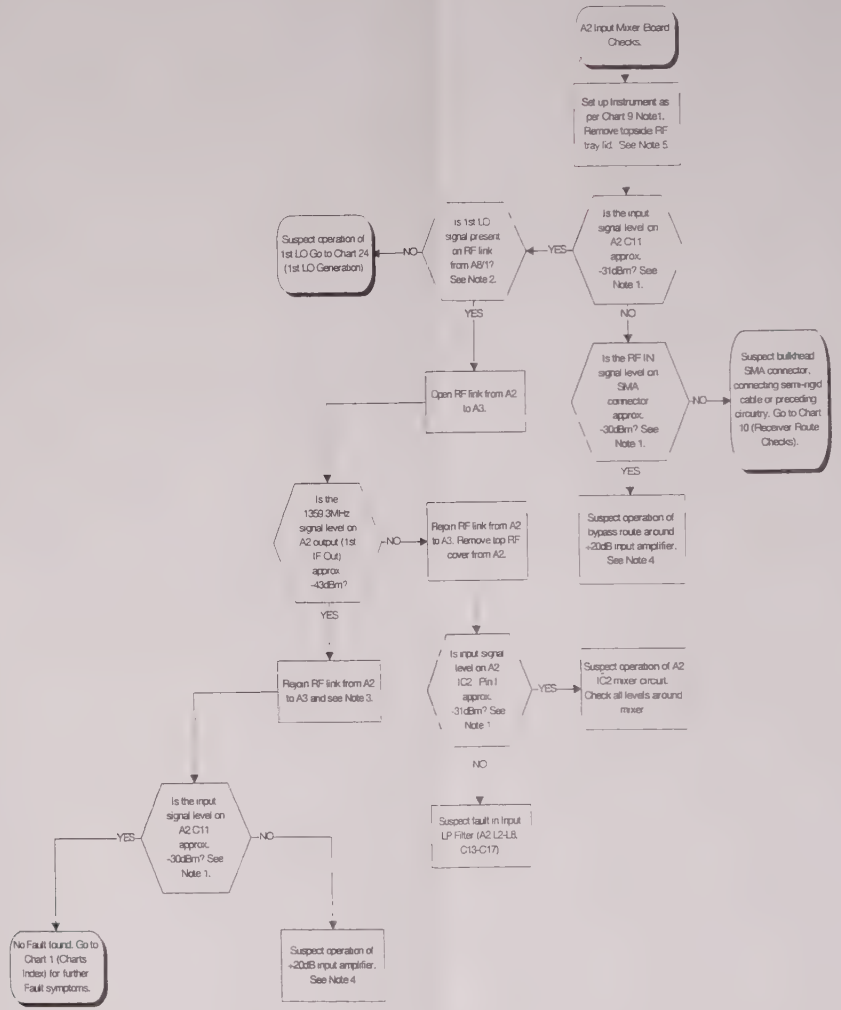

Chart 20
A2 Input Mixer Board Checks

Chart 21
A3 2nd and 3rd Mixer Board Checks

Associated Circuit Diagrams:
Z44991/131 (2945(A) Interconnections Diagram)
Z44991/200 (2947 Interconnections Diagram)
Z44991/229 (Opt.40 Interconnections Diagram)
Z44829/923 (A3 2nd and 3rd Mixer Board)
Z44830/103 (A4/1 10.7MHz IF Board)
Z44830/037 (A9/1 2nd and 3rd LO Board).
Z44829/930 (A10 90 MHz Swept LO Board)

NOTE 1.
This is not a true 'dBm' measurement, but simply the signal level measured on a spectrum analyser using a zero loss probe

NOTE 2.
Both of the 79.3MHz amplifiers have collector loads tuned to the IF frequency of 79.3MHz. The first amplifier (based on A3 TR1) has a gain of approximately 13dB, whilst the second stage (based on A3 TR2,3) has a gain of approximately 14dB.

NOTE 3.
The 79.3MHz Filter based around L2, L3 and L4 is an m-derived filter with a passband centre frequency of 79.3MHz. Additionally, the filter has three tuned rejection notches. L2 sets a notch at 100.7MHz, L3 sets a notch at 84.65MHz and L4 sets a notch at 73.95MHz

NOTE 4
The receiver is being swept over a 1KHz span. Therefore, to observe any of the swept IFs, use a wide span and/or wide video filter on the external measurement spectrum analyser.

NOTE 5.
The Isolating Gate prevents the 79.3MHz IF reaching PLA when in SPEC ANA mode. It is controlled by the signal on A3 PLC (+5V DC in SPEC ANA, +5V/0V square wave in Look and Listen)

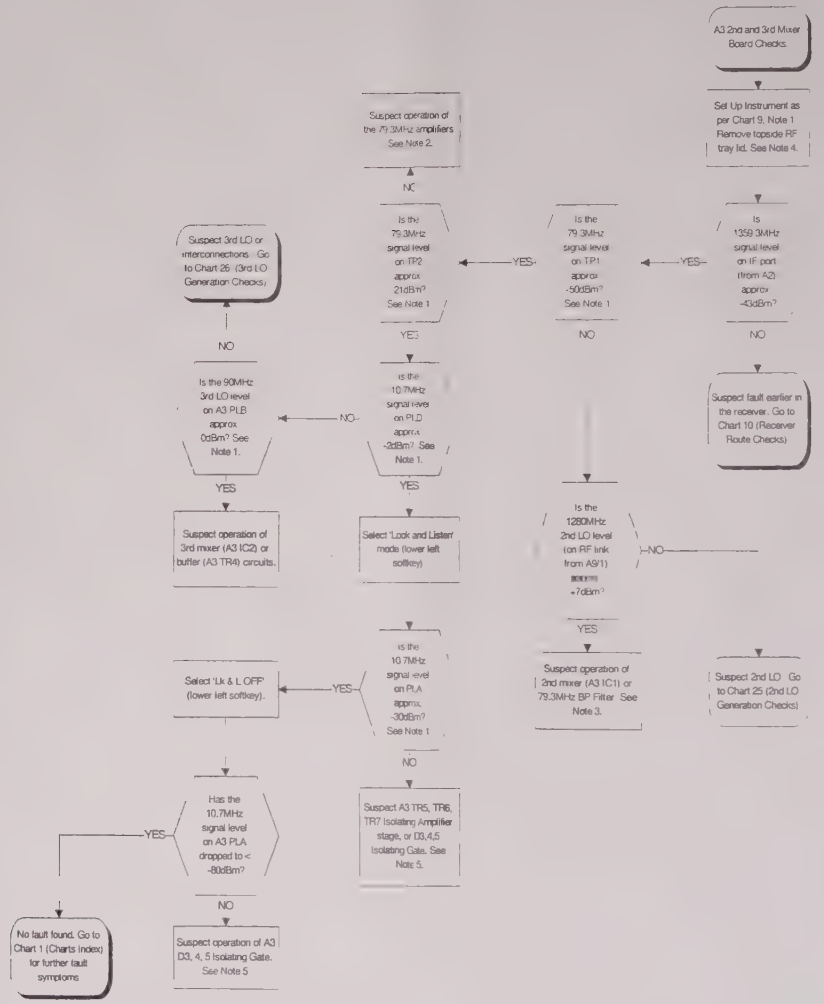

Chart 21
A3 2nd and 3rd Mixer Board Checks

Chart 22
A4/1 10.7MHz IF Board Checks

Associated Circuit Diagrams:
Z44991/131 (2945(A) Interconnections Diagram).
Z44991/200 (2947 Interconnections Diagram).
Z44991/229 (Opt.40 Interconnections Diagram).
Z44829/923 (A3 2nd and 3rd Mixer Board).
Z44830/103 (A4/1 10.7MHz IF Board).

NOTE 1.
This is not a true dBm measurement, but simply the signal level measured on a spectrum analyser using a zero loss probe.

NOTE 2.
The receiver is being swept over a 1MHz span. Therefore, to observe any of the swept IFs, use a wide span and/or wide video filter on the external measurement spectrum analyser, to achieve a stable reading.

This Chart may be followed exactly, in which case a CW signal is applied at the front panel and the signal routings on A4/1 are checked. Alternatively, a 10.7MHz swept signal may be applied directly to A4/1 PLA and the Chart followed, but instead of absolute level checks, correct bandwidth checks can be made.

The A4/1 board provides five resolution bandwidths; 300Hz, 3KHz, 30KHz, 300KHz and 3MHz.

The 300Hz, 3KHz and 30KHz filters are effected by crystal filters. The signal routing for these is from A4/1 IC6 to IC1, via D11. From IC1 the signal passes through the crystal filter stages, based around XL3, 4, 5 and 6. After the second crystal filter stage, the TR10 amplifier provides a gain dependant on which bandwidth is selected. From TR15, the signal then passes to the log amp, via the TR18 BP Filter stage.

The 300KHz filter is effected by ceramic filters. The signal routing is from A4/1 IC6 to IC1 via XL1, 2. From IC1 the signal passes to the log amp via the TR17 Line Driver stage and TR18 BP Filter stage.

The 3MHz receiver bandwidth is initially defined to be approx. 3MHz on A3. On A4/1, a final filtering action is performed by the TR18 BP Filter stage. The signal routing for the 3MHz filter is from A4/1 IC6 to the log amp, via D11, IC1, TR17 Line Driver stage and the TR18 BP filter stage.

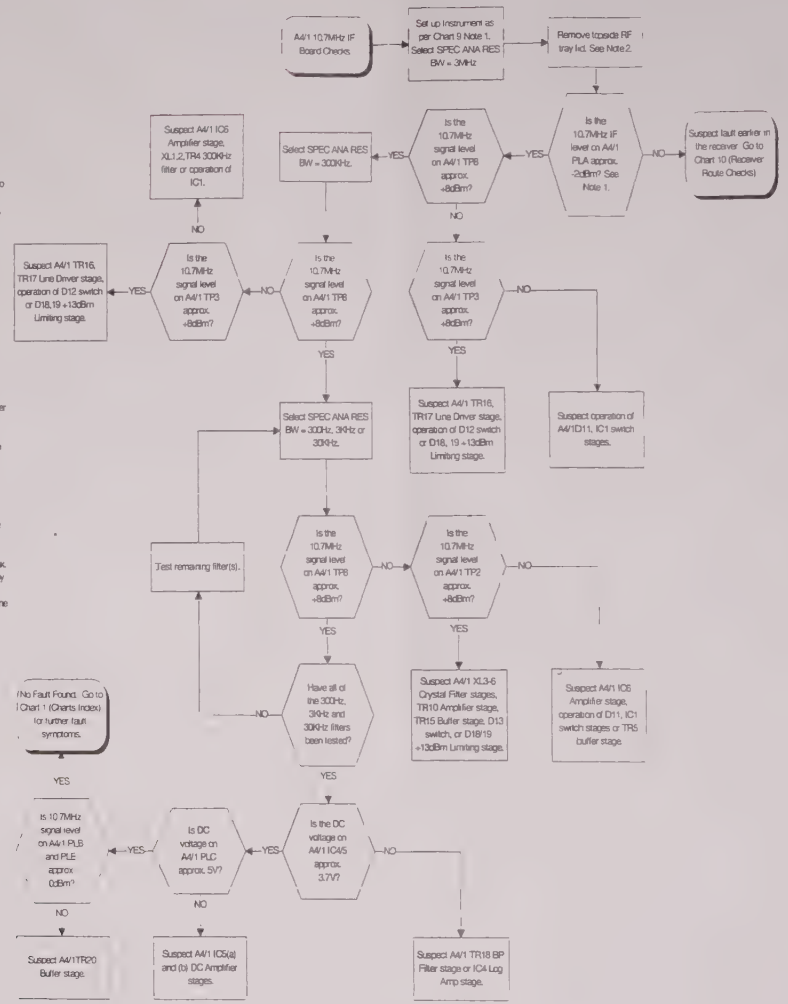

Chart 22
A4/1 10.7MHz IF Board Checks

Chart 23
A6/1 Output Amplifier Board Checks

Associated Circuit Diagrams
Z44691/131 (2945(A) Interconnections Diagram)
Z44691/200 (2947 Interconnections Diagram).
Z44691/229 (Opt.40 Interconnections Diagram)
Z44829/925 (A6/1 Output Amplifier)

NOTE 1.
Select Rx TEST mode. Select required Service Monitor output port. Set desired RF GEN frequency. Ensure RF GEN is ON.
If BNC output is selected, set Service Monitor RF GEN LEVEL=+5dBm. If N-TYPE port is selected, set Service Monitor RF GEN LEVEL= 21dBm.

NOTE 2.
As set up in Note 1, the signal level from A6/1 should be +5dBm for both output ports. Note, that the gain of A6/1 is software calibrated in terms of frequency response and linearity, so the cal figures should be checked if strange results are obtained. An uncalibrated instrument will have a gain roughly 4dB too high.

NOTE 3.
A6/1 is used to amplify over a 10dB dynamic range. Starting with RF GEN LEVELS of +5dBm (for BNC output) or -21dBm (for N-port o/p), the output of A6/1 should reduce smoothly by 10dB as the RF GEN LEVEL is gradually reduced by 10dB. If the RF GEN LEVEL is reduced further, the output of A6/1 will return to the top of its range (+5dBm), as an attenuator is placed in circuit on the output path. Continuing to reduce the RF GEN LEVEL to the bottom of its range will result in this cyclic movement (over the A6/1 10dB range) continuing.

NOTE 4.
The signal from A12/1 is at the RF GEN FREQ requested on the front panel. The level of the signal is approximately -16dBm across the frequency band. Note that A6/1 requires that A12/1 is fitted and not the older A12, whose frequency response is different.

NOTE 5
Using an external supply, apply a DC voltage, P, to A6/1 TP2. Vary this voltage between 0V and 1.5V. This will drive the pin diode attenuator and allow the operation of the open loop to be investigated. Increasing P decreases the output level of the requested RF GEN FREQ from A6/1. Use a high impedance zero loss probe to measure RF levels. (Levels quoted are simply those measured on a probe, not true dBm values). Beware the circuit oscillating when probing.

NOTE 6.
In Rx TEST mode, varying the RF GEN LEVEL between +5dBm and -5dBm (for BNC output port), or -21dBm to -31dBm (for N-type port), will operate A6/1 over its 10dB working dynamic range. The resultant RF LEVEL drive from B1 PLD7 to A6/1 PLB varies between approx. 0.5V and 2.5V.

NOTE 7.
The RF LEVEL (and AM) drive to A6/1 is set by DAC IC27 on B1. The reference voltage (i.e. 'gain') of the DAC is set by the reference voltage derived from the zener diode, B1 D4, using potentiometer R61. The nominal voltage set by R61 is approx. +4.5V; giving -4.5V on TP14, as B1 IC26(d) has unity gain.

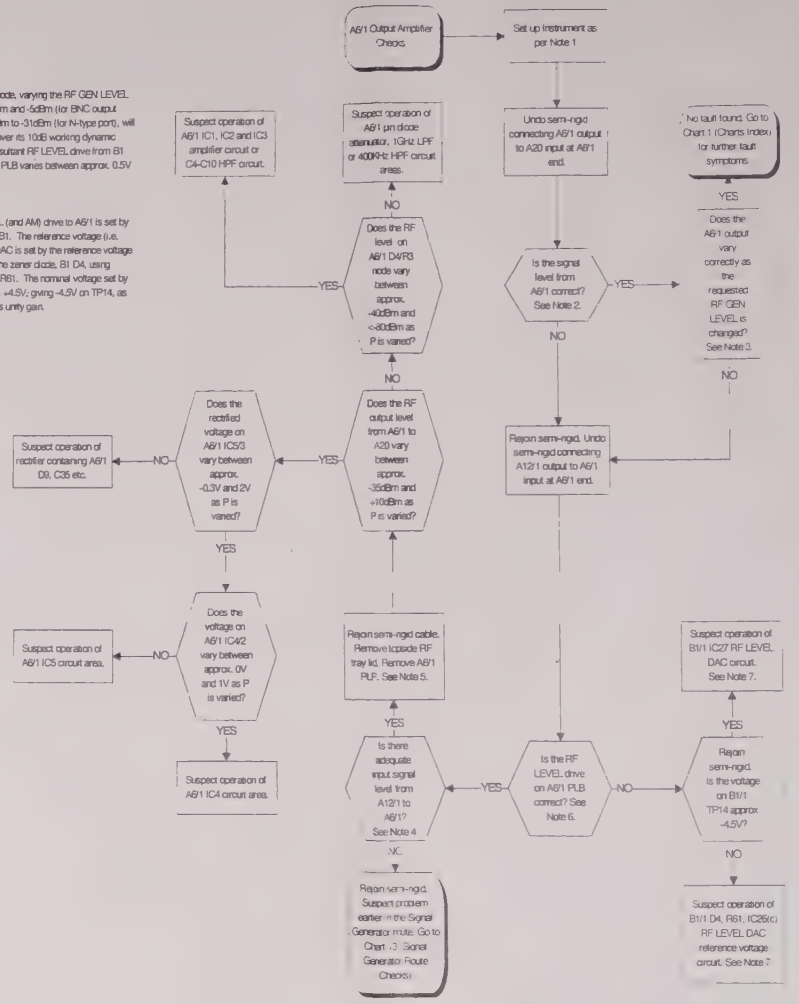

Chart 23
A6/1 Output Amplifier Board Checks

Chart 24
A7/1 and A8/1 1st LO Generation Checks

Associated Circuit Diagrams:
Z448259/22 (A2 Input Mixer Board)
Z448301/11 (A7/1 1st LO Control Board)
Z448301/12 (A8/1 1st LO Board)
Z448301/10 (B2/1 Microprocessor Board)

NOTE 1
The 1st Local Oscillator (LO) output connection from A8/1 to A2 is made by a copper strip, A8/1 PL6. The LO is at a frequency 1359.3MHz above the receiver frequency (TX FREQ in Tx TEST or the instantaneous frequency of the spectrum analyser). The level of the 1st LO to A2 is approx. +7dBm.

NOTE 2.
The flowchart will now test the operation of the A7/1 and A8/1 phase locked loop when the output frequency is that for a receiver frequency of 100MHz. If setting the receiver frequency to 100MHz restores correct operation, select the faulty receiver frequency and follow the flowchart but with the VCO tuned to (receiver frequency+1359.3MHz) instead of 1459.3MHz and recalculate the expected output frequency from A7/1 IC5/7 when told to check for 729.65MHz.

NOTE 3.
Connect an external DC supply voltage, P, to PL/D/2 (connected to daughterboard AA1 VCO TUNE input). Apply an initial voltage of 6.5V. Adjust voltage P between 4V and 8V, such that the RF output on A8/1 TP18 is at an approximate frequency of 1459.3MHz.

NOTE 4
A portion of the A8/1 VCO output is fed to A7/1 for the phase locked loop divider circuitry. The signal leaves A8/1 on the copper RF link, A8/1 PL/F, that connects A7/1 and A8/1 and is at a level of approx. +0dBm.

NOTE 5.
A7/1 IC3 is a programmable frequency divider driven by the fractional-N control chip, A7/1 IC7. Check that IC7 is being written to and is supplying IC3 data on pins IC7/2, 3, 4, 5, 6, 7, 8, 64, 65, 66, 67.

NOTE 6.
A8/1 IC7(a), IC8(a) and IC9(a)-(d) are configured as a digital phase detector.
A8/1 R25, R26 and C14 form an 'out of lock' indicator. When the loop is locked, there are +5V pulses (biased on 0V) on IC7(a)/5 and IC8(a)/8. When out of lock, either IC7(a)/5 or IC8(a)/8 will carry a waveform with an average 50% duty cycle which is sufficient to turn on A8/1 TR5, which in turn starts the 3Hz oscillator based around A8/1 IC8(c) and (d). This lights the 'out of lock' LED, A8/1 D2 and forces the phase detector so that TP11=0V and TP12=5V which attempts to push the voltage on TP17 to 30V. However, TR5 simultaneously turns on TR7 which clamps the voltage across C22 to 8V, to hold the VCO in the middle of its range. This mechanism thereby attempts to recover the VCO by pushing it to the middle of its frequency range if it is stuck at either end.
Operation of the phase detector can be tested by varying the external voltage, P, such that the output frequency, previously observed on the copper strip, A8/1 PL/F, between A8/1 and A2, varies about 1459.3MHz (for 100MHz receiver frequency), whilst verifying the voltages on A8/1 TP11 and TP12 are as follows:

	VCO O/P < 1459.3MHz	VCO O/P > 1459.3MHz
TP11	0V (with +5V pulses)	5V (with 0V pulses) alternating at 3Hz with 0V (with 5V pulses)
TP12	5V (with 0V pulses)	5V (with 0V pulses) alternating at 3Hz with 0V (with 5V pulses)

NOTE 7.
Amplifier stages A8/1 IC10(a), (b) and (c) form a level dependent amplifier. Apply an external DC voltage to PL/D/2 and verify that the voltage on TP7 is approx. as follows:

V(PL/D/2)	0V	10V	20V	25V
TP7	0.4V	1.0V	2.2V	3.7V

NOTE 8.
The loop filters are based around A8/1 L3 to L6, IC12 and C23, C24. DC operation of the filters can be tested by varying the external voltage, P, on PL/D/2 such that the output frequency, previously observed on the copper strip between A8/1 and A2, A8/1 PL/E, varies about 1459.3MHz (for 100MHz receiver frequency), whilst verifying the voltage on A8/1 TP17 is as follows:

VCO O/P < 1459.3MHz ramps between 8V and 30V

VCO O/P > 1459.3MHz ramps between 8V and 0V

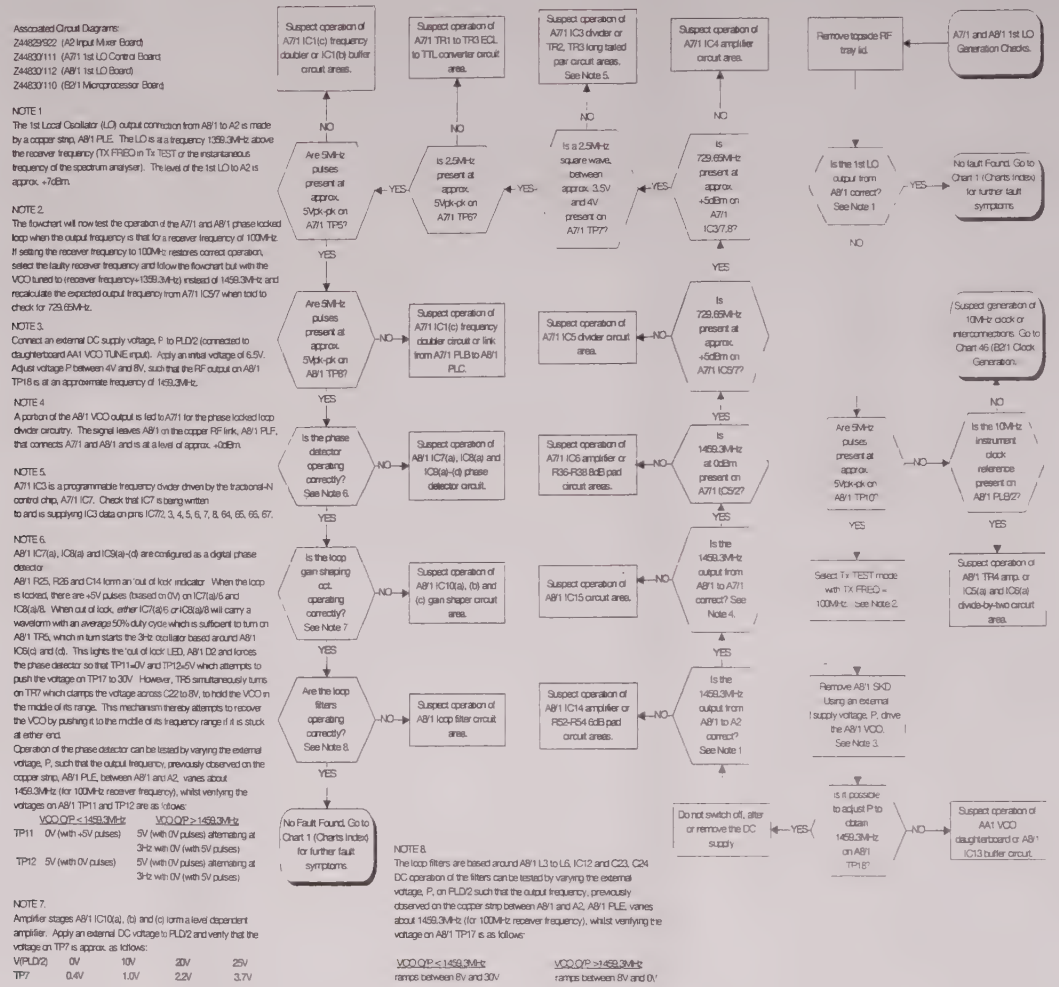

Chart 24
A7/1 and A8/1 1st LO Generation Checks

Chart 25
A9/1 1280MHz 2nd LO Generation Checks

Associated Circuit Diagrams:
Z44991/131 (2945(A) Interconnections Diagram).
Z44991/200 (2947 Interconnections Diagram)
Z44991/229 (Opt.40 Interconnections Diagram).
Z44800/037 (A9/1 2nd and 3rd LO Board).

NOTE 1.
There are two 2nd Local Oscillator outputs from A9/1. One leaves A9/1 '2nd LO OUT', PL/E, at an approx. level of +7dBm to go to A3 "LO IN" as an LO for the receiver. The other leaves A9/1 PL/G at an approx. level of -5dBm to go to C5 SKA as an LO for the signal generator BFO.

NOTE 2.
IC7(a), (b) and IC8(a) to (d) are configured as a four state phase detector. Operation of the phase detector can be tested as follows. Check that as the external voltage, P, is varied such that the A9/1 output (seen on A9/1 '2nd LO Out', PL/F) varies about 1280MHz, the following voltages are seen on A9/1 IC8/11:

.	VCO O/P < 1280MHz	VCO O/P > 1280MHz
VI(IC8/11)	0V (with 5V pulses)	5V (with 0V pulses)

NOTE 3.
The loop filtering is performed by A9/1 IC9(a). To test the dc operation of the filter, check that as the external voltage, P, is varied such that the A9/1 output (seen on A9/1 '2nd LO Out', PL/F) varies about 1280MHz, the following voltages are seen on A9/1 PL/K/2:

.	VCO O/P < 1280MHz	VCO O/P > 1280MHz
PL/K/2	12V	-12V

NOTE 4.
It is possible that the closed loop characteristic of the phase locked loop is incorrect. Check the loop filter components, the VCO characteristic and the phase detector circuit.

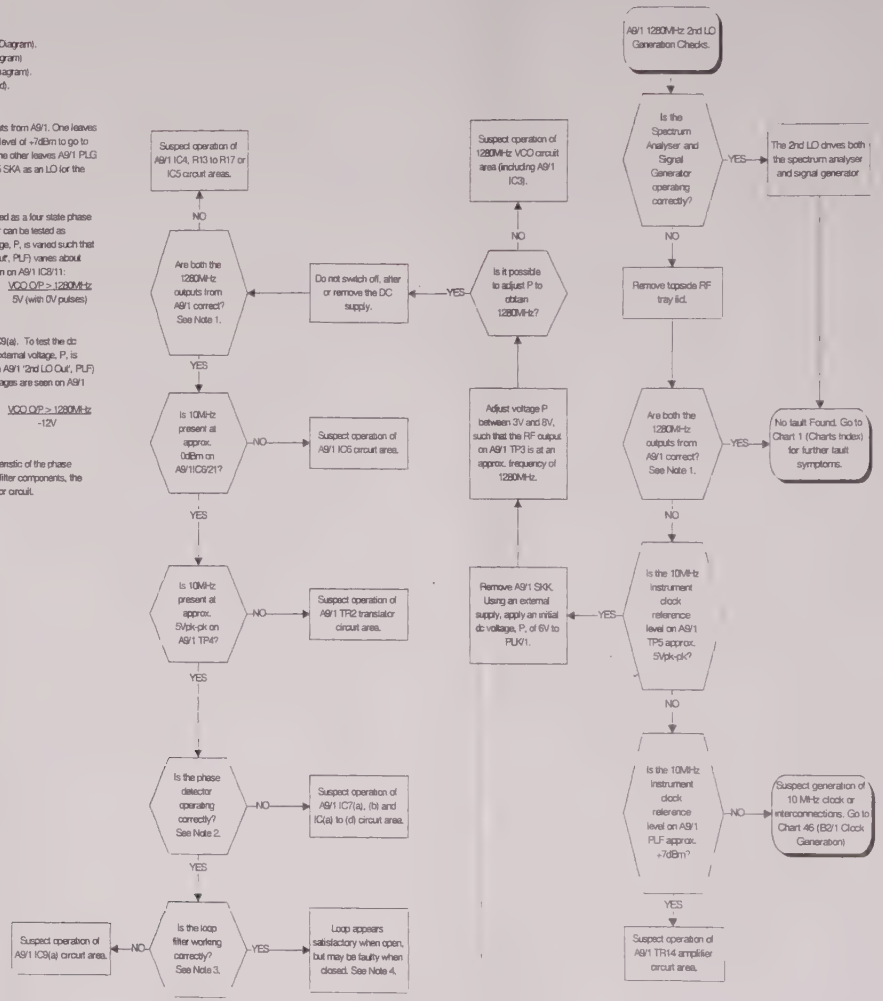

Chart 25
A9/1 1280MHz 2nd LO Generation Checks

Chart 26
A9/1 and A10 90MHz 3rd Local Oscillator Checks

Associated Circuit Diagrams.
Z4469/1/131 (2945(A) Interconnections Diagram).
Z4469/1/200 (2947 Interconnections Diagram)
Z4469/1/229 (Opt.40 Interconnections Diagram).
Z4480/097 (A9/1 2nd and 3rd LO Board).
Z4482/9/930 (A10 90MHz Swept LO Board)

NOTE 1.
A9/1 generates a 90MHz reference signal. This leaves A9/1 on PL6 at a level of approx. -10dBm and goes to A10 PL8. In normal SPEC ANA mode (L + L off), A10 acts as a slave oscillator which is phase locked to the A9 90MHz reference signal. The output of A10 is also 90MHz, but it is at a level of approx. 0dBm and appears on A10 PL6 and goes to A3 PL8.

NOTE 2.
IC12(a) and (b) and IC8(a) to (d) are configured as a four state phase detector. This is followed by IC14(a) which performs the loop filtering. Operation of both circuits can be tested as follows. Check that as the external voltage, P, is varied about 90MHz, the following voltages are seen on A9/1 IC13/6 and PL/M/2

	VCO O/P < 90MHz	VCO O/P > 90MHz
V(IC13/6)	5V (with 0Vpulses)	0V (with 5V pulses)
V(PL/M/2)	-12V	+12V

NOTE 3.
It is possible that the closed loop characteristic of the phase locked loop is incorrect. Check the loop filter components, the VCO characteristic and the phase detector circuit.

NOTE 4.
Remove the connection to A10 PL A/6 and then attach PL A/6 to ground (0V). This opens IC3(a) and hence opens the loop. Using an external supply, apply an initial DC voltage, Q, of 5V to A10 TP3.

NOTE 5.
A10 IC2 is an active "Gilbert Cell" mixer configured as a phase detector. The differential outputs are low pass filtered and made single-ended by the IC1(b) op amp circuit. Operation of the phase detector can be tested as follows. The outputs on pins 3 and 14 of A10 IC2 carry the difference frequency between the 90MHz reference and the nominal 90MHz fed back A10 output frequency. Therefore, the output frequency from IC1(b)/7 will be zero when the A10 output is exactly 90MHz (w.r.t. instrument reference frequency). Hence, check that as Q is varied, the frequency of the 5Vpk-pk distorted sine wave seen on A10 IC1(b)/7 approaches DC (i.e a few 10's of Hertz) when the A10 90MHz output (seen on A10 PLC) passes through 90MHz.

NOTE 6.
Must remove the board from the chassis to gain access to the underside components. A 'ground' connection must be made to the board for it to operate whilst 'hinged out', as no connection is made through A10 PLA.

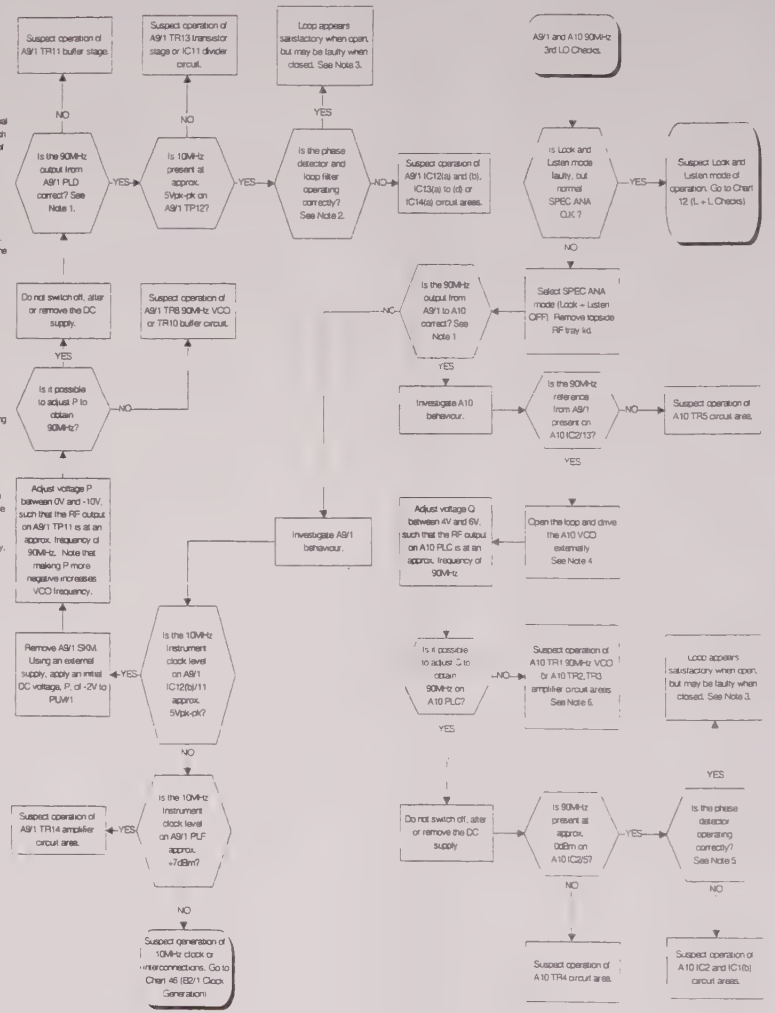

Chart 26
A9/1 and A10 90MHz 3rd Local Oscillator

Chart 27
A11/1 Input Switching Board Checks

Associated Circuit Diagrams
244891/131 (2945(A) Interconnections Diagram)
244891/200 (2947 Interconnections Diagram)
244891/229 (Opt.40 Interconnections Diagram)
244829/163 (A11/1 Input Switching Board)

NOTE 1
Select SPEC ANA mode. Select ANTENNA input port Set SPEC ANA REF LEV = 0dBm Apply a 100MHz CW signal at 0dBm to the ANTENNA port

NOTE 2
The A11/1 ANTENNA input is that input leading to RLD The A11/1 BNC output is that between RLB and the Output Attenuator A20

NOTE 3.
The N input/output is the central of the three A11/1 inputs and leads to the resistive splitter

NOTE 4.
The Rx input is that leading to the A21 attenuator, via a semi rigid cable soldered to A11/1

NOTE 5.
Remove 100MHz input to N port. Select Rx TEST mode. Select BNC output port and place a 50ohm termination on the port Set RF GEN FREQ = 100MHz and LEVEL = 0dBm

NOTE 6.
The A11/1 Signal Generator port is the inout adjacent to RLE and the Output Attenuator A20

NOTE 7
Select N-Type output port. Transfer termination to N port Set RF GEN LEV = -36dBm

NOTE 8.
The Broadband Power Meter is on Sheet 2 of the A11/1 circuit diagram and its operation is as follows The RF input is detected by the D10(b) RF Detector cct This is then compared (using IC1) with a 25KHz signal detected by the D10(a) LF Detector cct The level difference signal generated by IC1 drives the IC3,4 AGC Amplifier which amplifies a reference 25Khz signal applied on A11/1 PLA/5. Thus, under the closed loop mechanism, the AGC amplifier generates a LF signal of equal level to the input RF Signal, under the control of IC1 The resultant LF signal is then buffered to PLC, before passing to B1/1 for measurement

When faultfinding, check for the presence of the reference 25Khz signal on A11/1 PLA/5 and the presence of detected signals on IC1/2 and 3. The AGC can be checked by driving it via an external DC source (-8V to -10V), by lifting A11 R37 and driving it through R37

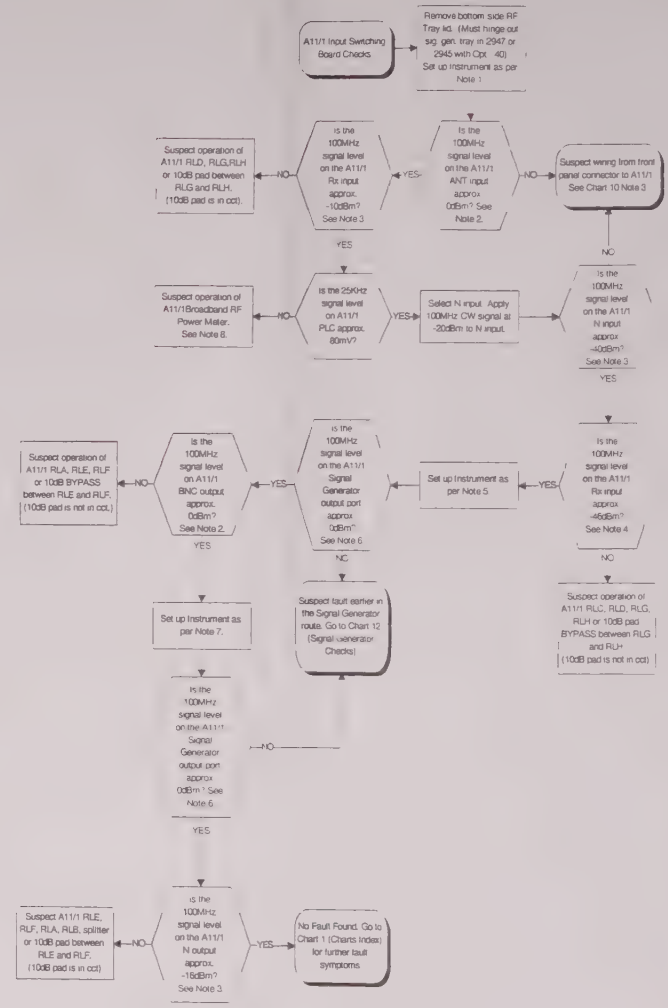

Chart 27
A11/1 Input Switching Board Checks

Chart 28
A15 SSB Board Checks

Associated Circuit Diagrams:
Z44830/103 (A4/1 10.7MHz IF Board).
Z44830/116 (B1/1 Audio Processor Board).
Z44830/110 (B2/1 Microprocessor Board).

NOTE 1.
Select Tx TEST, with TX FREQ = 300MHz. Select SSB from MOD METER menu, with MEDIUM Rx sensitivity. Select NB power meter from the Tx POWER menu. Apply an external 300.001MHz signal at 0dBm with no modulation to the ANT input. Hinge out signal generator RF tray. To do this, the semi-flexible RF cables from C4 to A6 and from A9/1 to C5 must be unscrewed from the sig. gen. tray and the memory card must be removed. Remove bottomside RF tray lid (adjacent to A20 attenuator).

NOTE 2.
A15 TR1 is configured as an amplifier, controlled by the IC4(a) and (b) AGC circuit. The AGC circuit is designed to cope with an IF input range on A15 PLA/1 between -50dBm and +10dBm. The corresponding drive voltage on the gate of TR1 is approx. -1V (TR1 low gain), to +1V (TR1 high gain). The circuit around IC4(a) simply provides a fast attack and slow decay characteristic to the AGC to improve the circuits performance when dealing with intermittent signals (e.g. human speech). Since the AGC is a closed loop system, its failure can be due to a fault in either the forward or reverse sections of the loop.

To aid faultfinding, lift C19 and inject a 1KHz signal at approx. 500mVpk-pk into the AGC and vary its level, whilst looking for a change in the RF signal level on IC1/1. IC1 expects to see around -35dBm.

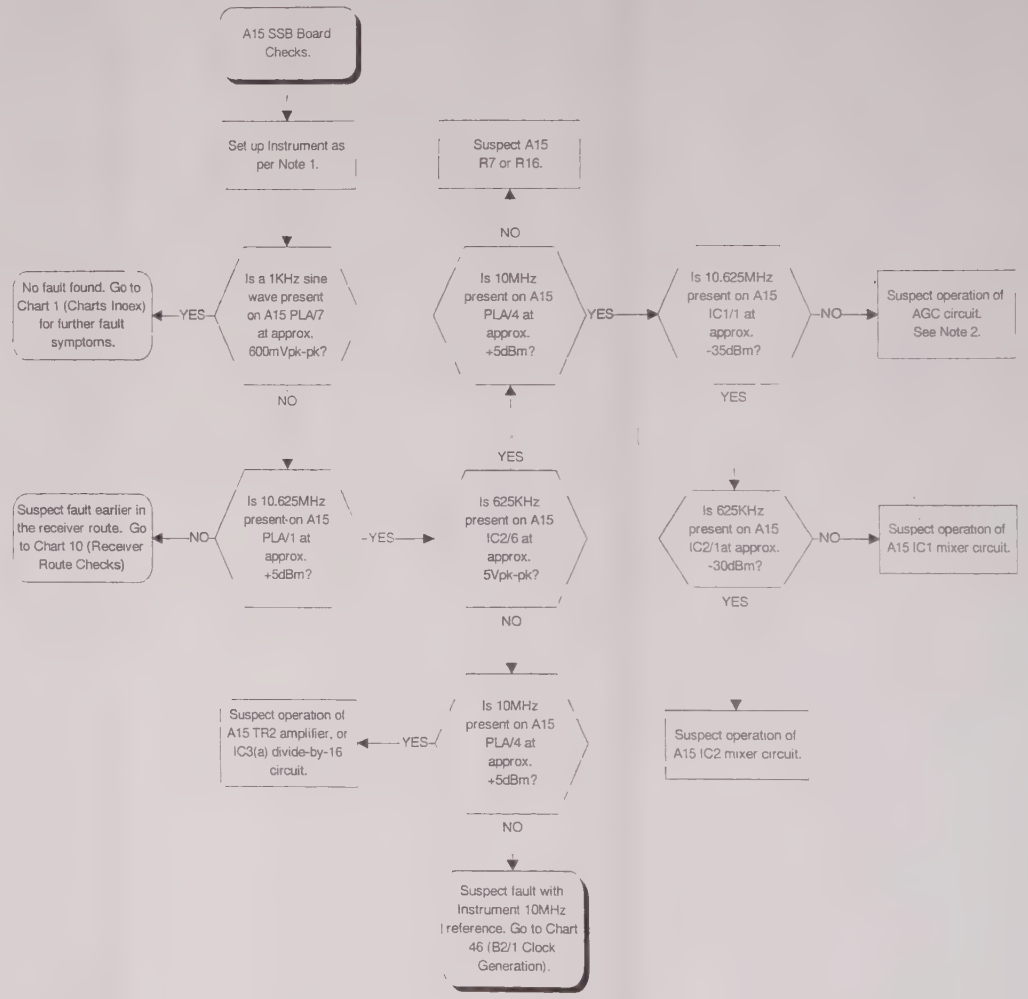

Chart 28
A15 SSB Board Checks

Chart 30
A20/A21 Attenuator Checks

Associated Circuit Diagrams:
Z44991/131 (2945(A) Interconnections Diagram).
Z44991/200 (2947 Interconnections Diagram).
Z44991/229 (Opt.40 Interconnections Diagram).
Z44829/891 (A20 Output Attenuator).
Z44829/892 (A21 Input Attenuator).
Z44830/110 (B2/1 Microprocessor Board).

NOTE 1.
Unscrew attenuator from chassis (two screws). To gain access in a 2947 or 2945 with Option 40, the sig. gen. tray must be hinged out. Connect a signal / tracking generator to the attenuator input.
For A20, the input connector is the one connected to A6/1 in the topside RF tray by a semi rigid cable. For A21, the input connector is the one connected to A11/1 in the bottom side RF tray via a semi rigid cable.
Connect a spectrum analyser to the attenuator output.

NOTE 2.
For A20 connect +5V to PLA/2 and for A21 connect +5V to PLA/4.

NOTE 3.
Both attenuators consist of resistive pads that may be selected or bypassed by relays. One end of the relay coils is supplied with a constant +5V and the relay is then driven by applying a 0V pulse to the other end of the appropriate coil. This can be performed manually to check the operation of the relay. Connect +5V to A20 PLA/2, or A21 PLA/4 and then simply touch 0V on the appropriate pin as indicated in Table 1. Note the attenuator input signal level from the signal/tracking generator and check that the measured output level from the attenuator agrees with Table 1.

TABLE 1 ATTENUATOR DRIVE CONFIGURATION.

ATTN. PAD.	A20 PLA IN	A20 PLA OUT	A21 PLA IN	A21 PLA OUT
20dB	7	5	7	5
40dB	3	1	3	1
40dB	10	8	-	-

NOTE 4.
To drive the input attenuator, see Chart 11 Note 2. To drive the output attenuator, see Chart 15 Note 5. Under normal operation, it is very difficult to observe the pulldown pulse generated by B2/1 TR12-17. To aid observation, remove the attenuator drive cable from B2/1 PLL and load the relevant PLL output with a 2K7 resistor to +5V. Select the attenuator and check that the resistor is pulled low for approx. 40mS. The outputs are labelled on the B2/1 circuit diagram.

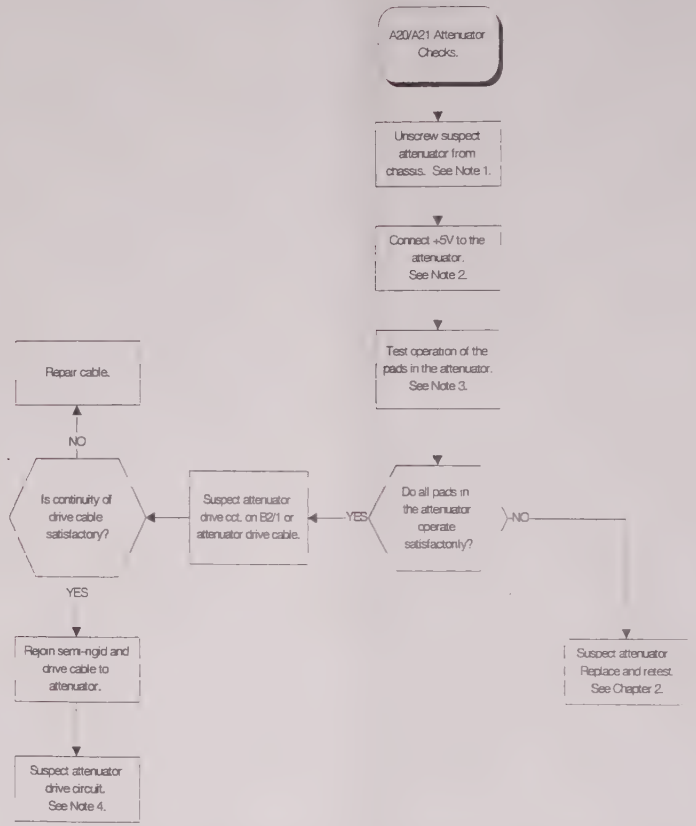

!! CONSULT 'ACCESS AND LAYOUT' CHAPTER 2 BEFORE REFITTING A20 ATTENUATOR !!

Chart 30
A20/A21 Attenuator Checks

Chart 40
B1/1 Audio Generator Checks

Associated Circuit Diagrams:
Z44991/131 (2945(A) Interconnections Diagram)
Z44991/200 (2947 Interconnections Diagram).
Z44991/229 (Opt.40 Interconnections Diagram).
Z44830/116 (B1/1 Audio Processor Board).

NOTE 1
Both AF GEN1 and AF GEN2 can be output directly from the AF OUT socket on the front panel, or used as modulation generators MOD GEN1 and MOD GEN2 for the signal generator. Additionally, in Lock and Listen mode, AF GEN2 is reserved as the sweep waveform for the swept 90MHz 3rd LO.

NOTE 2
Select AF TEST mode, Tones, DCS, Tone o/t, Return. Ensure the faulty AF GEN ON. Select only one GEN and enter the parameters AF GEN FREQ=1KHz, LEVEL=1Vand AF GEN SHAPE = Sin.

NOTE 3
B1/1 IC1 and IC2 gate arrays are, essentially, configured as accumulators. The main processor loads the relevent gate array with an 'increment value', via the 8 bit bus D0 to D7, which is added to the accumulator total. The accumulator counts monotonically, returning through zero when full scale is reached. Hence, the increment value determines the output frequency. The gate arrays are clocked with a 1MHz clock on pin 51. Functionality of the gate arrays can be ascertained by checking for 5V square wave activity on output pins 7, 29 to 34 and 37 to 42.

NOTE 4.
B1/1 IC3 and IC4 are EPROMs that are programmed as look up tables for the relevent AF GEN shape. As the 13 bit binary number supplied by the gate arrays increment from zero to full scale, the 8 bit output words from the EPROMs represents the output level (or 'shape') for one period of the audio waveform. Functionality of the EPROMs can be ascertained by checking the outputs on pins 11 to 19 for somewhat random 5V square wave activity.

NOTE 5
B1/1 IC5 and IC6 convert the EPROM outputs to analogue voltages. Their reference voltages are set by B1/1 R2, such that the voltage on TP1 should be 5.86V. The analogue outputs can be observed on B1/1 IC9/6 and IC10/6.

NOTE 6
Switches B1/1 IC13(a) to (d) direct the required AF GEN signal(s) to the AF OUT driver circuit, via resistors that set the gain of IC19 to either 0.2 or 2, depending on the level range that is being used. IC19 AF Driver is protected against damage from low impedance loads by solid state fuses R90 and R91.
Once tripped, the instrument must be turned off and left for 1 minute to reset the fuses.

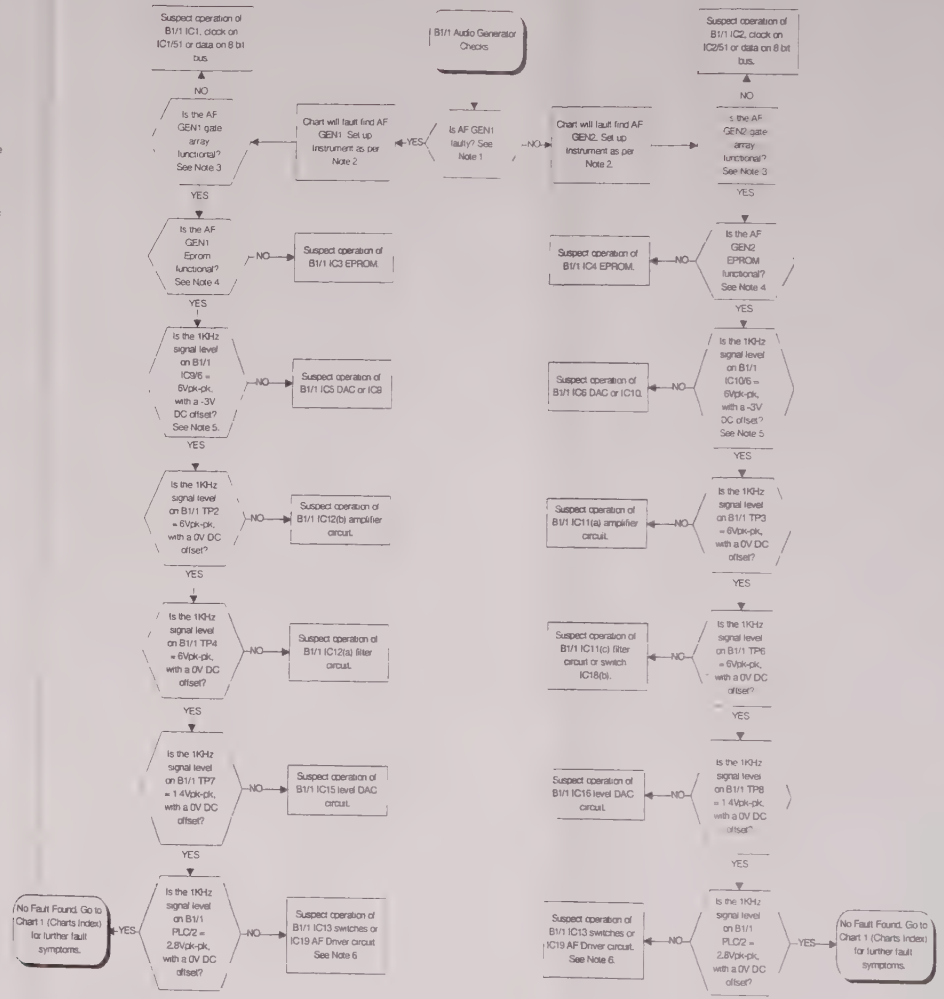

Chart 40
B1/1 Audio Generator Checks

Chart 41
B1/1 AM Demodulation Checks

Associated Circuit Diagrams:
Z 44991/131 (2945(A) Interconnections Diagram)
Z 44991/200 (2947 Interconnections Diagram)
Z 44991/229 (Opt 40 Interconnections Diagram)
Z 44630/116 (B1/1 Audio Processor Board Sheets 5,7 and 8)

NOTE 1
Select Tx TEST mode with AM DEMOD selected with AF FILTER = 0.3 TO 3.4KHz and SINAD = Off. Remove connector from B1/1 PLF and apply a 10.7MHz input signal modulated with 1KHz 80% A.M. at a measured level of -50dBm to PLF/2. Select [Tx Freq], [Tx Freq], [Return], [Tx Power], [1n Pwr], [Return]. Turn SQUELCH off (rotate knob fully anticlockwise).

NOTE 2
Select SPEC ANA Look and Listen mode with AM DEMOD selected with AF FILTER = 0.3 to 3.4KHz and SINAD = Off. Remove connector from B1/1 PLG and apply a 10.7MHz input signal modulated with 1KHz, 80% AM at a measured level of -50dBm to PLG/2.

NOTE 3
The AM Demodulator IC101, achieves demodulation by mixing the AM input signal with a limited version of the input signal derived from IC102. The output contains the required demodulated audio signal, an RF component at the carrier frequency and its harmonics and a DC component which is proportional to the carrier level. The outputs have the RF removed by C127 and C128 and are then made single ended by IC103(b).

NOTE 4
The 50KHz filter is approximately a 3rd order Butterworth LPF with a notch at 170KHz. IC108(d) provides a gain of ±5.5.

NOTE 5
Remove the link between TP123 and TP124. Apply an external DC voltage, P, of 1.5V to TP123 and adjust P to obtain a 10.7MHz level of -68dBm on B1 IC100/1.

NOTE 6
There is a PIN diode attenuator and PIN diode switch in both the B1/1 PLF (Tx TEST) and PLG (Look and Listen) input paths. The two paths combine at IC100/1. Under these conditions, both the PIN diode attenuators (D100-102 and D103-105) should have approx. 20dB loss. However, the 10.7MHz signal will only reach IC100/1 from one path dictated by the relevant switch (D106-108 or D109 to D111). The AGC operates over the input range 0dBm to -60dBm for corresponding control voltages on TP123 of -2V to +10V. IC100 has a gain of approx. 30dB.

NOTE 7
The loop may be unstable when closed. Recheck operation of the loop, whilst varying P. Pay particular attention to signal shapes and the loop filter characteristics.

NOTE 8
The AGC comparator B1/1 IC103(a) compares the demodulator d.c. output level with the reference voltage on IC103(a)/3 set by IC104(a). It can be tested by checking that when the external 10.7MHz input signal on B1/1 PLG/PLF is reduced to -60dBm the voltage on TP124 = +11.5V and when it is raised to -40dBm, the voltage on TP124 = -11.5V.

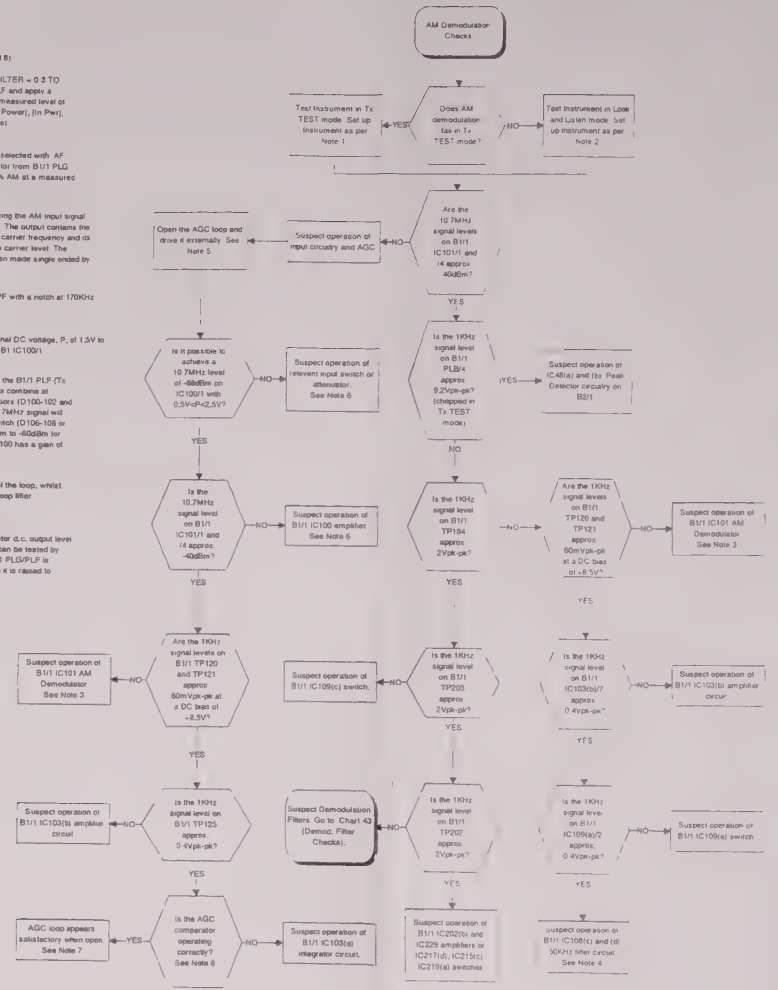

Chart 41
B1/1 AM Demodulation Checks

Chart 42
B1/1 FM Demodulation Checks

Associated Circuit Diagrams:
Z4489/1/131 (2945(A) Interconnections Diagram)
Z4489/1/200 (2947 Interconnections Diagram)
Z4489/1/229 (Opt.40 Interconnections Diagram).
Z448390116 (B1/1 Audio Processor Board - Sheets 5,7 and 8)

NOTE 1.
Select Tx TEST mode with FM DEMOD selected with AF FILTER = 0.3 TO 3.4KHz and SINAD = Off. Remove connector from B1/1 PL/F and apply an unmodulated 10.7MHz input signal at a measured level of -50dBm to PL/F2. Select [Tx Freq], [Tx Freq], [Return], [Tx Power], [In Pwr], [Return]. Turn SQUELCH off (rotate knob fully anticlockwise).

NOTE 2.
Select SPEC ANA Lock and Listen mode with FM DEMOD selected with AF FILTER = 0.3 to 3.4KHz and SINAD = Off. Remove connector from B1/1 PL/G and apply an unmodulated 10.7MHz input signal at a measured level of -50dBm to PL/G2.

NOTE 3.
The B1/1 IC109(c) and (d) 50KHz filter is approximately a 3rd order Butterworth LPF with a notch at 170KHz. IC109(d) provides a gain of x5.5 B1/1 R181 sets the FM Level Gain.

NOTE 4.
Remove the link between TP123 and TP124. Apply an external DC voltage, P, of 12V to TP123.

NOTE 5.
There is a PIN diode attenuator and PIN diode switch in both the B1/1 PL/F (Tx TEST) and PL/G (Lock and Listen) input paths. The two paths combine at IC100/1. In FM demodulation mode the PIN diode attenuators (D100-102 and D103-105) should have approx. 0dB loss, as it is desirable to limit the signal. The AGC is forced into a maximum gain state in FM mode by the IC104(a) control voltage acting on IC103(a). However, the 10.7MHz signal will only reach IC100/1 from one path dictated by the relavent switch (D106-108 or D109 to D111).

NOTE 6.
The AGC comparator B1/1 IC103(a)/1 output should be +12V, as IC103(a) is forced into a maximum gain state by IC104(a) to set the AGC gain to maximum. This is desirable as it limits the 10.7MHz FM input signal.

NOTE 7.
The FM demodulator is a dual monostable that generates fixed length pulses for each cycle of the 700KHz input IF signal. Hence, the higher the input signal frequency, the closer the pulses and the greater the average output voltage.

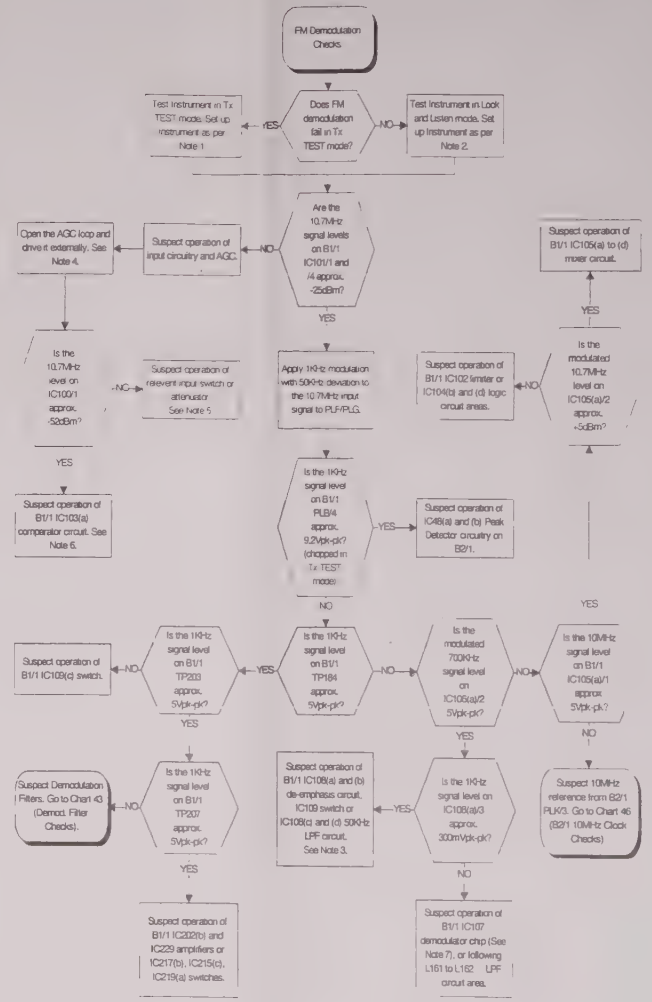

Chart 42
B1/1 FM Demodulation Charts

Chart 43
B1/1 Demodulation Filter Checks

Associated Circuit Diagrams:
Z44830/116 (B1/1 Audio Processor Board - Sht 8)

NOTE 1.
Operation of the 50KHz LP AF Filter is covered in Chart 41 or 42. Go to the relevant chart (depending whether in AM mode or FM mode) if the 50KHz filter is suspected.
Otherwise, select Tx TEST mode with TX FREQ= 100MHz. Set Mod Meter to FM with IF Filter=300KHz, AF Filter=0.3 to 3.4KHz, Distortion=off and Deemphasis=off. Select the ANTENNA input port and apply a 100MHz signal at 0dBm, with 1KHz FM and deviation of 50KHz.

NOTE 2.
B1/1 IC221 is a 4th order Butterworth switched capacitor filter, whose cut off frequency is determined by the clock frequency on pin 2. It performs the 300Hz, 3.4KHz and 15KHz LPF functions. The cutoff frequency is 1/50 the applied clock frequency. However, input signals close to the clock frequency will alias through the filter. This is a problem when the cutoff frequency is 300Hz, as the clock frequency is then 15KHz which lies in the audio band. For this reason, the anti-alias filter based around B1/1 IC220(a) has a switchable low pass cut-off frequency of 800Hz or 50KHz. The 800Hz cut-off frequency is used when in 300Hz LP mode.

Filter Cutoff	Clock Frequency
300Hz	15KHz
3.4KHz	170KHz
15KHz	740KHz

NOTE 3.
The clock frequency for the switched capacitor filter B1/1 IC221 is generated by the phase locked loop VCO, B1/1 IC224. The VCO output is divided in frequency by cascaded binary counters IC226 and IC227. The division rate is programmed via the microprocessor data lines to pins 1, 9, 10 and 15 on both devices. The divided output phase is then compared to a 5KHz reference supplied to B1/1 IC224/14. B1/1 R296 and C298 form the PLL loop filter. C297, R295 determine the VCO operating range up to 100KHz and C297, R295 parallel R315 determine the VCO operating range between 120KHz and 1MHz.
If the PLL is faulty, check for the presence of the 5KHz reference signal at 5Vpk-pk on IC224/14. Then determine whether the VCO has any output frequency at all. If it does, either the dividers are faulty, or the phase comparator in IC224 is at fault.

NOTE 4.
B1/1 IC209(b) is a 2nd order Low Pass Filter which filters out the switched capacitor clock frequency. It has two selected cutoff frequencies to cover a 15KHz to 750KHz clock range:
IC219(c) and (d) open gives a cutoff = 32KHz.
IC219(c) and (d) closed gives a cutoff = 1KHz.

NOTE 5.
The filters have worked at the audio frequencies used in this chart (i.e. in the passband). To verify the filter frequency responses, the chart can be repeated using suitable audio frequencies for each filter. Alternatively, Remove link from B1/1 TP204 and inject an audio tracking generator into TP204 and see the swept response on a spectrum analyser.

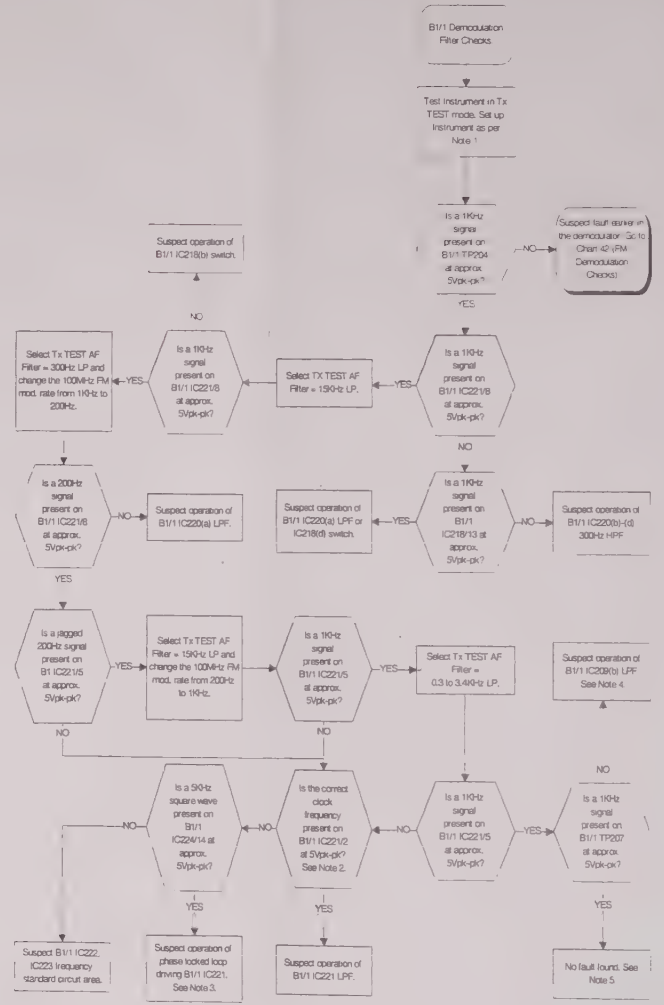

Chart 43
B1/1 Demodulation Filter Checks

Chart 45
B2/1 Processing of Log Amp Signal Checks

Associated Circuit Diagrams:
Z44991/131 (2945(A) Interconnections Diagram).
Z44991/200 (2947 Interconnections Diagram).
Z44991/229 (Opt.40 Interconnections Diagram)
Z44830/103 (A4/1 10.7MHz IF Board).
Z44830/110 (B2/1 Microprocessor Board).

NOTE 1.
Hinge out the B1/1 and B2/1 circuit boards. Remove B2/1 PLT and apply a DC voltage of 4V to PLT/2. Select SPEC ANA mode with REF LEVEL=0dBm. Select ANTENNA port.

NOTE 2.
The input attenuators provide changes in receiver sensitivity in 10dB steps. To obtain the 0.5dB REF LEVEL resolution between these steps, the log amp signal is artificially lifted by summing it with the voltage on B2/1 TP23 using IC72(c). With ANTENNA input selected and a REF LEVEL of 0dBm, however, no lift is applied. The voltage on TP23 should be 0V. (Max. lift would make TP23 -1.9V).
The voltage on IC72(c)/10 is the video filtered input voltage from PLT. The signal is first attenuated by R219 to R221 by 1/1.32. Hence, the voltage, in this case, on IC72(c)/10 should be 3.03V. The video filters, based around TR26 to TR29 have cut off frequencies of 19.8KHz, 3KHz, 650Hz and 99Hz respectively. They are used for SPEC ANA IF Filter settings of 300KHz, 30KHz, 3KHz and 300Hz respectively.

NOTE 3
The transfer function for B2/1 IC72(c) is Vout = (1.32 x V(+)) - (0.32 x V(tp23)). Therefore, the voltage on B2/1 IC72(c)/8 should be 4V.

NOTE 4.
In 10dB/DIV mode, switch B2/1 IC71(b) is open, giving the transfer function for B2/1 IC72(d) of Vout = V(IC72/8). Therefore, the voltage on B2/1 IC72(c)/14 should be 4V.

NOTE 5.
In 2dB/DIV mode, switch B2/1 IC71(b) is closed, giving the transfer function for B2/1 IC72(d) of Vout = (3.32 x V(IC72/8)) -11.6. Therefore, the voltage on B2/1 IC72(c)/14 should be 1.7V.

NOTE 6.
When using the ANTENNA port, changing the REF LEVEL from 0dBm to 0.5dBm places a further 10dB of attenuation in the receiver input and so the log amp signal is artificially raised by 9.5dB. The voltage on B2/1 TP23 should now be -1.9V. This is negatively summed with the log amp voltage by B2 IC72(c).

NOTE 7.
Hinge out the B1/1 and B2/1 circuit boards. Remove the connector from B2/1 PLT. Connect a tracking generator to PLT/2 (making a 0V connection anywhere that is convenient on the B2/1 board). Using a suitable probe, observe the swept frequency response on B2/1 IC72(c)/10.

NOTE 8.
The video filter cutoff frequency automatically varies according to which RES BW is selected. Using the table below, verify that each of the filters (placed in circuit by B2/1 TR26 to TR29) has the correct response.

Filter Selected	RES BW	Cut Off Frequency
TR29 / C125	300Hz	99Hz
TR28 / C124	3KHz	650Hz
TR27 / C123	30KHz	3KHz
TR26 / C122	300KHz	19.8KHz

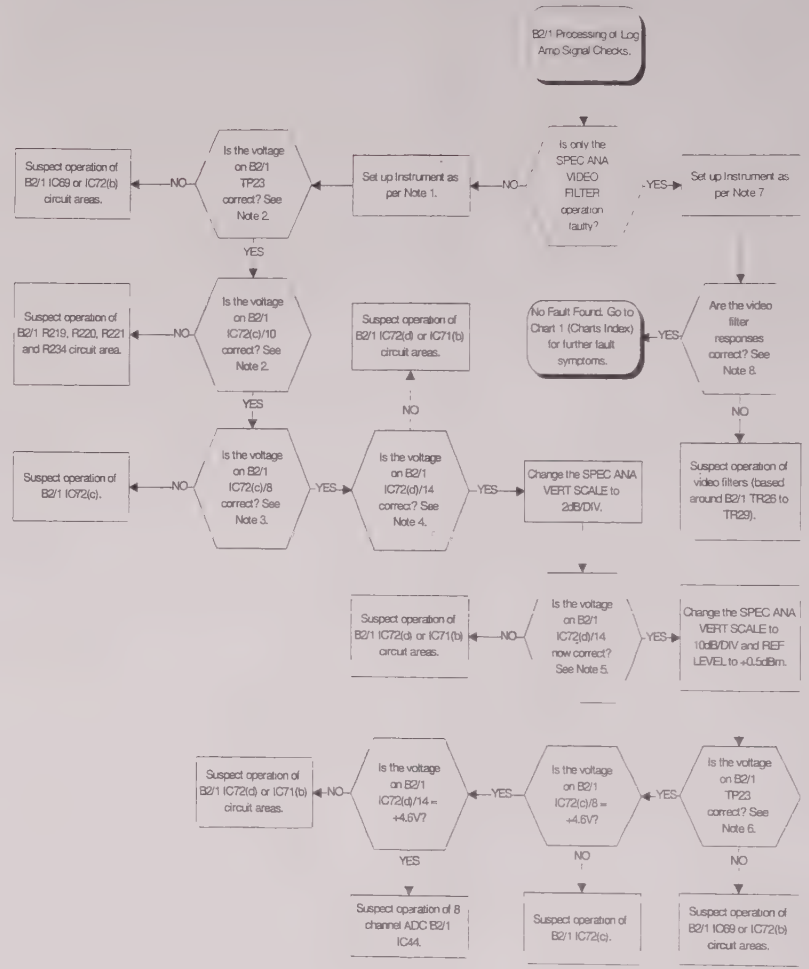

Chart 45
B2/1 Processing of Log Amp Signal Checks

Chart 46
B2/1 10MHz Clock Generation and Distribution

Associated Circuit Diagrams:
Z44991/131 (2945(A) Interconnections Diagram).
Z44991/200 (2947 Interconnections Diagram)
Z44991/229 (Opt.40 Interconnections Diagram)
Z44830/110 (B2/1 Microprocessor Board).

NOTE 1.
The instrument may be fitted with either a TCXO or OCXO. This chart applies to both types of standards. The frequency pulling ranges of the OCXO and TCXO are +- 150Hz and +- 300Hz respectively, for the 5V control voltage range. Therefore, their output frequencies should be very close to 10MHz regardless of what steering voltages are applied to them on their control pins. The outputs are 5Vpk-pk square waves and can be observed on B2/1 PLB/1

NOTE 2.
The external standard (when supplied) enters B2/1 on PLA/2 and may be 1,2,5 or 10MHz. It is buffered by B2/1 TR2 and IC82(e) onto TP1. B2/1 IC1 is a PAL, whose reference frequency is provided by IC3(b)/10 in the Instruments internal reference loop. The external standard passes directly to IC1/3, but also via IC3(a), a dual 4 bit counter, which provides a further half, fifth and tenth of the standard to pins 4,5 and 6 of IC1. Given the instrument reference, IC1 is able to decide the frequency of the external standard and chooses the relevant straight or divided version, such that its output frequency on pin 13 is always 1MHz. This 1MHz signal is then divided by 8 by IC5(a) to give a 125KHz signal, which is compared to the 125KHz divided frequency standard output from IC3(b)/13. IC4(b) acts as a phase detector.
For OCXO operation, R223 is removed, as the OCXO steering voltage operates in a negative sense to the TCXO steering voltage. When no external standard is present, the voltage on IC4(b)/4 is 0V.

NOTE 3.
The voltage on PLB/5 is the OCXO/TCXO control voltage. It is the sum of the filtered output from B2/1 IC4(c) and the frequency standard calibration control voltage from IC75(c). The frequency standard control voltage is generated by the dual DAC, B2/1 IC51. The output from IC75(a) represents the COARSE control and that from IC75(b) the FINE control. Both vary between 0 and -5V, as the COARSE and FINE values are adjusted in the FREQ STANDARD CAL screen. Their relevent weights are set by R12 and R14. The COARSE control is capable of changing the OCXO/TCXO between the full range of 0V and 5V and so its operation and value should always be checked if the voltage on PLB/5 is greater than 1V from 2.5V

NOTE 4
The operation of the 20MHz phase locked loop will now be checked. B2/1 IC7 is a phase locked loop chip containing the phase detector and VCO. R16 is removed to break the loop. Connect the R16/ R17 node to 0V. IC7 should then oscillate at (very) approx. 20MHz, to allow fault finding to proceed.

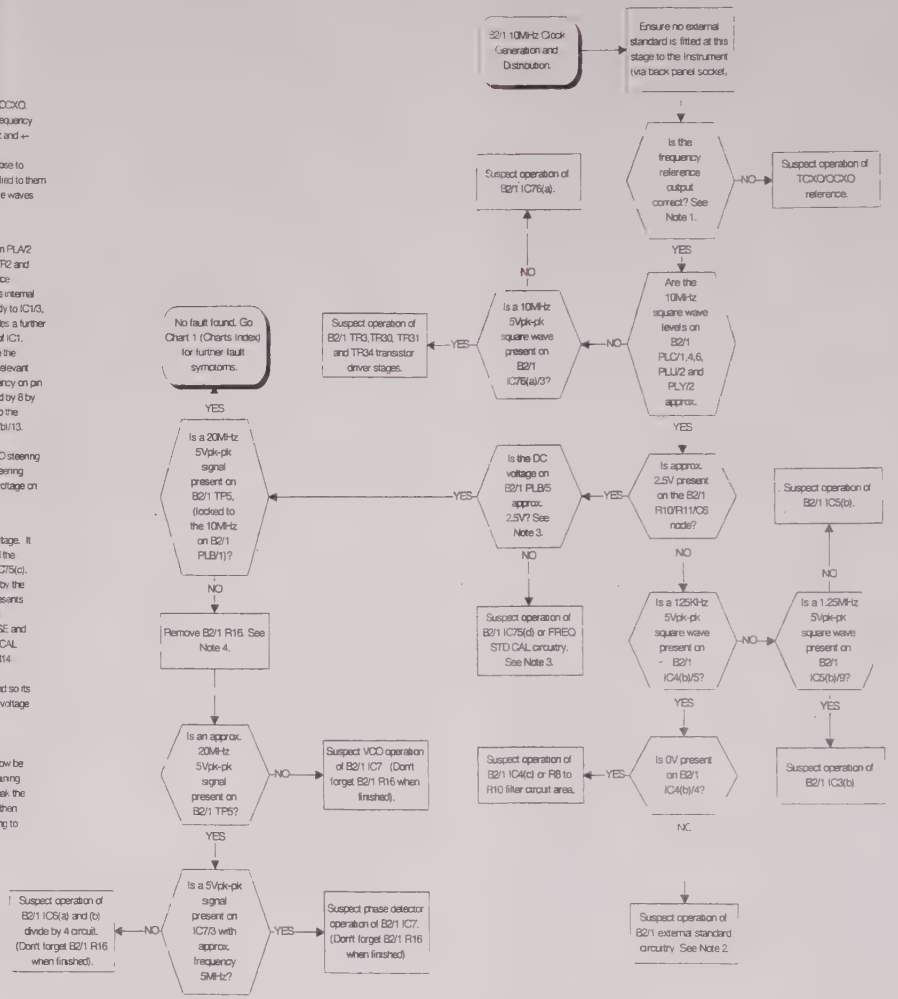

Chart 50
C1/C2 Initial Signal Generator Synthesiser Checks

Associated Circuit Diagrams:
Z44830/110 (B2/1 Microprocessor Board).
Z44830/113 (C1 RF Generator Control Board).
Z44830/104 (C2 RF Oscillator Board).
Z44830/105 (C3 RF Divider Board).

NOTE 1.
The RF output signal from C2 can be derived from one of three VCO's. The first spans 576MHz to 720MHz and is located on C2. The second and third span 720MHz to 912MHz and 912 to 1152MHz and are located on the AF3 daughterboard above C2. These outputs may then be divided/mixed in frequency to obtain the lower signal generator ranges. However, the C1/C2 charts (50 to 53) are only concerned with the operation of the VCO's and so will only test the signal generator over the range 576MHz to 1050MHz and over the divided frequency ranges using the top 1050 to 1152MHz portion of the 912 to 1152MHz VCO.

If correct operation is observed over these ranges, yet the signal generator is still faulty, it will be assumed that the fault lies in the C3 division and filtering, or onwards. In this case, or if C1/C2 are still suspected at signal generator frequencies below 576MHz, see Chart 14 (Signal Generator Route Checks).
NOTE 2.
The 'OSC FREQ' signal should be at the RF GEN FREQ set in the prior operation.

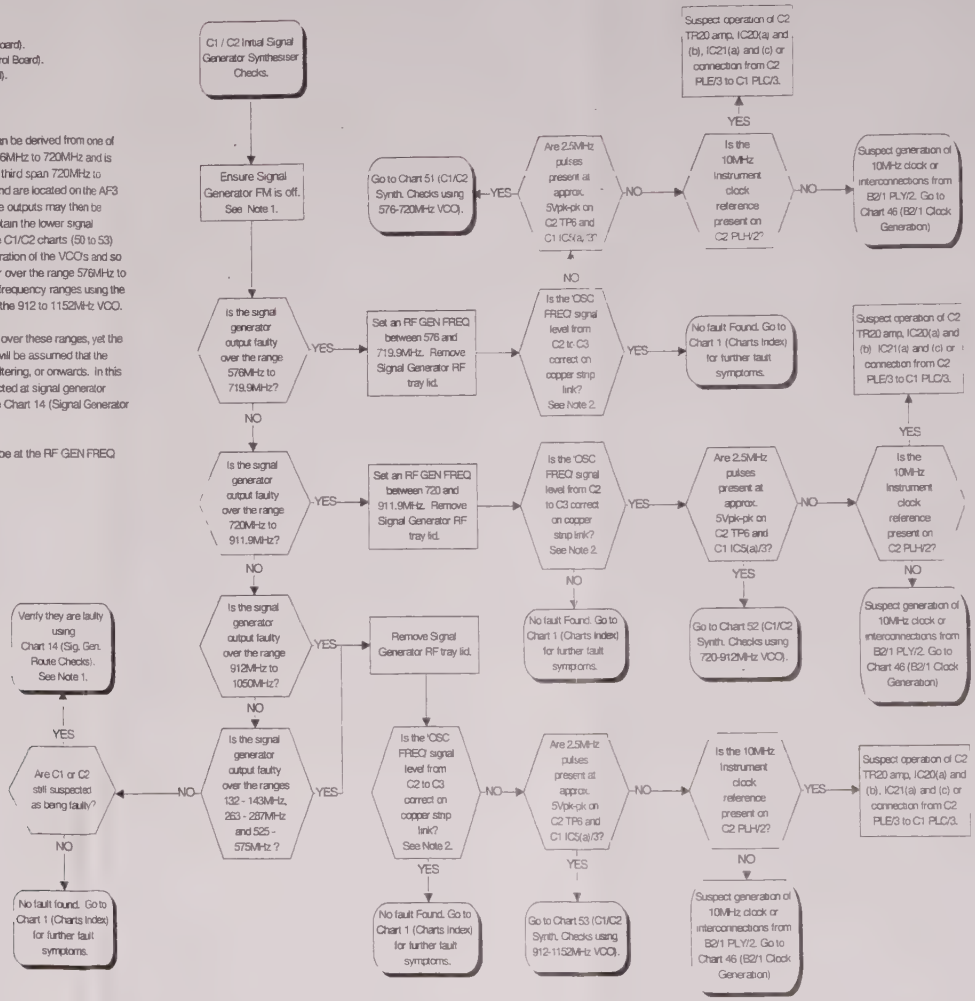

Chart 50
C1/C2 Initial Signal Generator Synthesiser Checks

Chart 51
C1/C2 Synthesiser Checks (using 576 - 720 MHz VCO)

Associated Circuit Diagrams:
Z44830/110 (B2/1 Microprocessor Board).
Z44830/113 (C1 RF Generator Control Board).
Z44830/104 (C2 RF Oscillator Board).
Z44830/105 (C3 RF Divider Board).

NOTE 1.
The flowchart will now test the operation of the C1 / C2 phase locked loop when the output frequency is that for an RF GEN frequency of 648MHz. If setting the RF GEN frequency to 648MHz restores correct operation, select the faulty RF GEN frequency and follow the flowchart but with the VCO tuned to the faulty frequency (576MHz to 720MHz) instead of 648MHz and recalculate the expected output frequency from C1 IC2/7 as (RF GEN FREQ/2) when asked to check for 324MHz.

NOTE 2.
Connect an external DC supply voltage, P, to C2 PLJ/2. Apply an intial voltage of 6.5V. Adjust voltage P between 4V and 8V, such that the RF output on C2 IC7/1 is at an approximate frequency of 648MHz.

NOTE 3.
The 'OSC FREQ' connection from C2 to C1 is made on a copper RF link. The signal level should be approximately +8dBm.

NOTE 4.
A portion of the C2 VCO output is fed to C1 for the phase locked loop divider circuitry. The signal leaves C2 on the copper RF link, marked 'OSC FREQ to C1' at a level of approx. 0dBm.

NOTE 5.
C1 IC10 is a programmable frequency divider driven by the fractional-N control chip, C1 IC9. Check that IC9 is being written to and is supplying IC10 data on pins IC9/2, 3, 4, 5, 6, 7, 8, 64, 65, 66, 67.

NOTE 6.
C2 IC3(b), IC4(a), IC5(a) to (d) are configured as a digital phase detector. Operation of the phase detector can be tested by varying the external voltage, P, on C2 PLJ/2, such that the output frequency, previously observed on the 'C2 OSC FREQ to C3' copper strip between C2 and C3, varies about 648MHz (for 648MHz RF GEN FREQ), whilst verifying the voltages on C2 TP4 and TP5 are as follows:

	VCO O/P < 648MHz	VCO O/P > 648MHz
TP4	0V (with +5V pulses)	5V (with 0V pulses)
TP5	5V (with 0V pulses)	0V (with +5V pulses)

NOTE 7.
The C2 VCO Drive circuit, consisting of TR8 to TR10, TR15 and TR16, converts the pulsed phase detector output to a steady voltage to drive the VCO. Essentially, C17 and C18 are charged in a ratio that depends on the polarity of the phase detector outputs. This resultant voltage on the charged capacitors drives the TR9 and TR10 output stage. TR15 and TR16 conduct when the magnitude of the phase 'error' signal from the phase detector is large and thus reduce time to lock when the frequency error is large. Operation of the circuit can be tested by varying the external voltage, P, on C2 PLJ/2, such that the output frequency, previously observed on the 'C2 OSC FREQ to C3' copper strip between C2 and C3, varies about 648MHz (for 648MHz RF GEN FREQ), whilst verifying the voltage on C2 PLJ/1 is as follows:

	VCO O/P < 648MHz	VCO O/P > 648MHz
PLJ/1	20V	0.5V

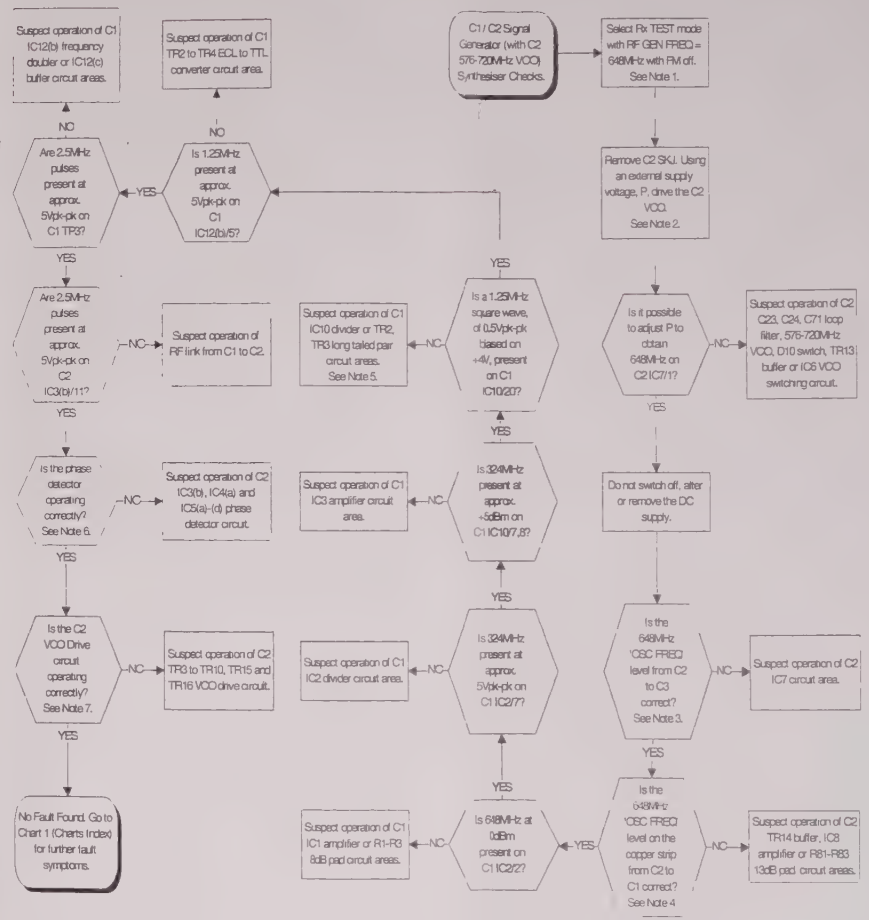

Chart 51
C1/C2 Synthesiser Checks (using 576 - 720 MHz VCO)

Chart 52
C1/C2 Synthesiser Checks (using 720 - 912 MHz VCO)

Associated Circuit Diagrams:
Z44830/110 (B2/1 Microprocessor Board).
Z44830/113 (C1 RF Generator Control Board).
Z44830/104 (C2 RF Oscillator Board).
Z44830/105 (C3 RF Divider Board).

NOTE 1.
The flowchart will now test the operation of the C1 / C2 phase locked loop when the output frequency is that for an RF GEN frequency of 816MHz. If setting the RF GEN frequency to 816MHz restores correct operation, select the faulty RF GEN frequency and follow the flowchart but with the VCO tuned to the faulty frequency (720MHz to 912MHz) instead of 816MHz and recalculate the expected output frequency from C1 IC2/7 as (RF GEN FREQ/2) when asked to check for 408MHz.

NOTE 2.
Connect an external DC supply voltage, P, to C2 PL1/2. Apply an initial voltage of 11V. Adjust voltage P between 8V and 14V, such that the RF output on C2 IC7/1 is at an approximate frequency of 816MHz.

NOTE 3.
The 'OSC FREQ' connection from C2 to C1 is made on a copper RF link. The signal level should be approximately +8dBm.

NOTE 4.
A portion of the C2 VCO output is fed to C1 for the phase locked loop divider circuitry. The signal leaves C2 on the copper RF link, marked 'OSC FREQ to C1' at a level of approx. 0dBm.

NOTE 5.
C1 IC10 is a programmable frequency divider driven by the fractional-N control chip, C1 IC9. Check that IC9 is being written to and is supplying IC10 data on pins IC9/2, 3, 4, 5, 6, 7, 8, 64, 65, 66, 67.

NOTE 6.
C2 IC3(b), IC4(a), IC5(a) to (d) are configured as a digital phase detector. Operation of the phase detector can be tested by varying the external voltage, P, on C2 PL1/2, such that the output frequency, previously observed on the 'C2 OSC FREQ to C3' copper strip between C2 and C3, varies about 816MHz (for 816MHz RF GEN FREQ), whilst verifying the voltages on C2 TP4 and TP5 are as follows:

	VCO O/P < 816MHz	VCO O/P > 816MHz
TP4	0V (with +5V pulses)	5V (with 0V pulses)
TP5	5V (with 0V pulses)	0V (with +5V pulses)

NOTE 7.
The C2 VCO Drive circuit, consisting of TR3 to TR10, TR15 and TR16, converts the pulsed phase detector output to a steady voltage to drive the VCO. Essentially, C17 and C18 are charged in a ratio that depends on the polarity of the phase detector outputs. This resultant voltage on the charged capacitors drives the TR9 and TR10 output stage. TR15 and TR16 conduct when the magnitude of the phase 'error' signal from the phase detector is large and thus reduce time to lock when the frequency error is large. Operation of the circuit can be tested by varying the external voltage, P, on C2 PL1/2, such that the output frequency, previously observed on the 'C2 OSC FREQ to C3' copper strip between C2 and C3, varies about 816MHz (for 816MHz RF GEN FREQ), whilst verifying the voltage on C2 PL1/1is as follows:

	VCO O/P < 816MHz	VCO O/P > 816MHz
PL1/1	20V	0.5V

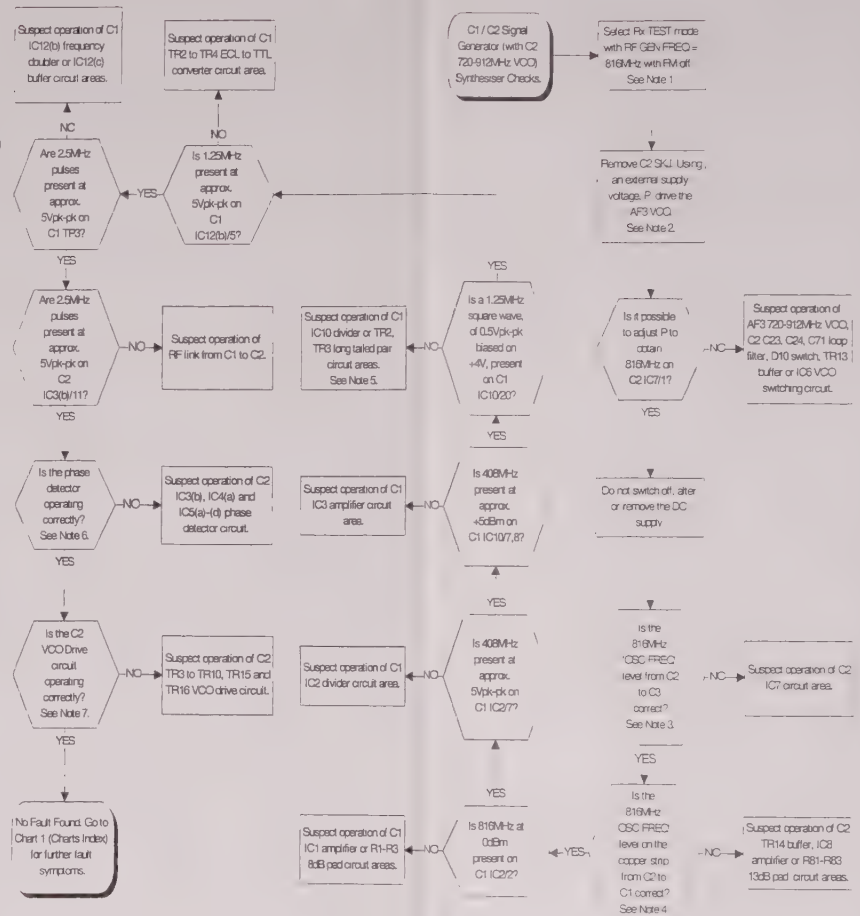

Chart 52
C1/C2 Synthesiser Checks (using 720 - 912 MHz VCO)

Chart 53
C1/C2 Synthesiser Checks (using 912 - 1152 MHz VCO)

Associated Circuit Diagrams:
Z44830/110 (B2/1 Microprocessor Board).
Z44830/113 (C1 RF Generator Control Board).
Z44830/104 (C2 RF Oscillator Board).
Z44830/105 (C3 RF Divider Board).

NOTE 1.
The flowchart will now test the operation of the C1 / C2 phase locked loop when the output frequency is that for an RF GEN frequency of 1032MHz. If setting the RF GEN frequency to 1032MHz restores correct operation, select the faulty RF GEN frequency and follow the flowchart but with the VCO tuned to the faulty frequency (912MHz to 1032MHz) instead of 1032MHz and recalculate the expected output frequency from C1 IC2/7 as (RF GEN FREQ/2) when asked to check for 516MHz.

NOTE 2.
Connect an external DC supply voltage, P, to C2 PLJ/2. Apply an initial voltage of 11V. Adjust voltage P between 8V and 14V, such that the RF output on C2 IC7/1 is at an approximate frequency of 1032MHz.

NOTE 3.
The 'OSC FREQ' connection from C2 to C1 is made on a copper RF link. The signal level should be approximately +8dBm.

NOTE 4.
A portion of the C2 VCO output is fed to C1 for the phase locked loop divider circuitry. The signal leaves C2 on the copper RF link, marked 'OSC FREQ to C1' at a level of approx. 0dBm.

NOTE 5.
C1 IC10 is a programmable frequency divider driven by the fractional-N control chip, C1 IC9. Check that IC9 is being written to and is supplying IC10 data on pins IC9/2, 3, 4, 5, 6, 7, 8, 64, 65, 66, 67.

NOTE 6.
C2 IC3(b), IC4(a), IC5(a) to (d) are configured as a digital phase detector. Operation of the phase detector can be tested by varying the external voltage, P, on C2 PLJ/2, such that the output frequency, previously observed on the 'C2 OSC FREQ to C3' copper strip between C2 and C3, varies about 1032MHz (for 1032MHz RF GEN FREQ), whilst verifying the voltages on C2 TP4 and TP5 are as follows:

	VCO O/P < 1032MHz	VCO O/P > 1032MHz
TP4	0V (with +5V pulses)	5V (with 0V pulses)
TP5	5V (with 0V pulses)	0V (with +5V pulses)

NOTE 7.
The C2 VCO Drive circuit, consisting of TR3 to TR10, TR15 and TR16, converts the pulsed phase detector output to a steady voltage to drive the VCO. Essentially, C17 and C18 are charged in a ratio that depends on the polarity of the phase detector outputs. This resultant voltage on the charged capacitors drives the TR9 and TR10 output stage. TR15 and TR16 conduct when the magnitude of the phase 'error' signal from the phase detector is large and thus reduce time to lock when the frequency error is large. Operation of the circuit can be tested by varying the external voltage, P, on C2 PLJ/2, such that the output frequency, previously observed on the 'C2 OSC FREQ to C3' copper strip between C2 and C3, varies about 1032MHz (for 1032MHz RF GEN FREQ), whilst verifying the voltage on C2 PLJ/1is as follows.

	VCO O/P < 1032MHz	VCO O/P > 1032MHz
PLJ/1	20V	0.5V

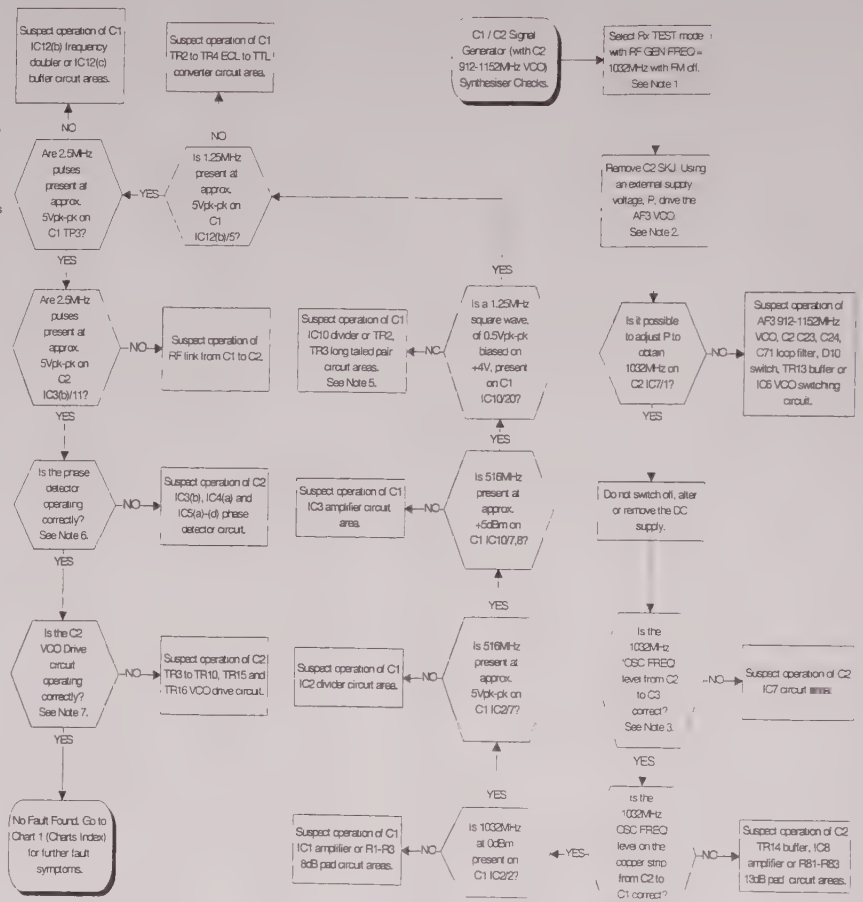

Chart 53
C1/C2 Synthesiser Checks (using 912 - 1152 MHz VCO)

Chart 54
C3 RF Divider Board Checks

Associated Circuit Diagrams:
Z44830/110 (B2/1 Microprocessor Board).
Z44830/113 (C1 RF Generator Control Board).
Z44830/104 (C2 RF Oscillator Board).
Z44830/105 (C3 RF Divider Board).

NOTE 1.
Chart 60 summarises all possible routings through the C3 board (as well as C1/C2, C4 and C5). It is worthwile checking the chart prior to detailed faultfinding, as significant deductions can be made. For example, it can be seen from the chart that if only the RF GEN frequencies from 144MHz to 199.999999MHz are faulty, it is likely the C3 200MHz LPF is at fault.

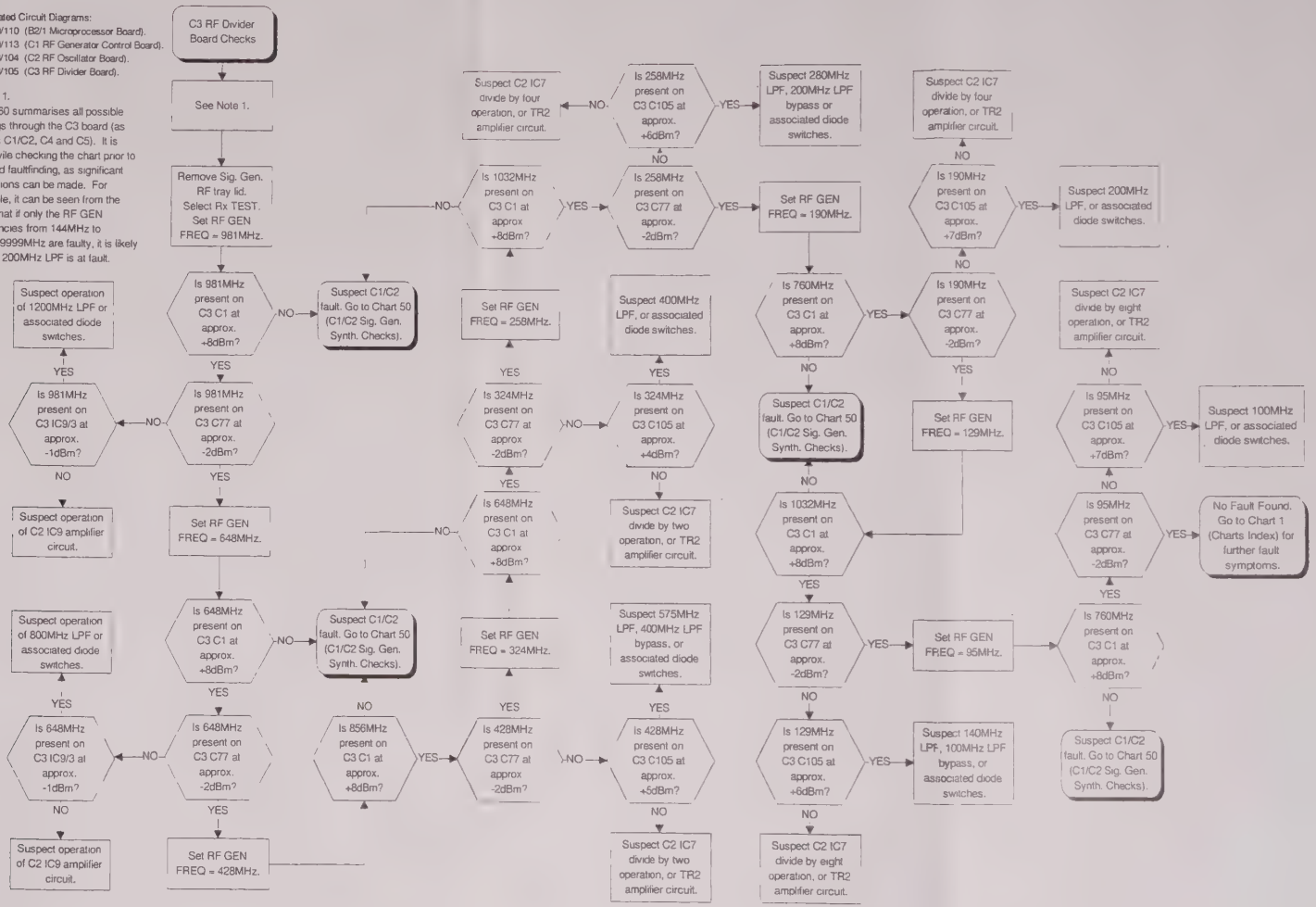

Chart 54
C3 RF Divider Board Checks

Chart 55
C4 Bypass Board Checks

Associated Circuit Diagrams:
Z44830/113 (C1 RF Generator Control Board).
Z44830/104 (C2 RF Oscillator Board).
Z44830/105 (C3 RF Divider Board).
Z44830/106 (C4 Bypass Board).
Z44830/107 (C5 BFO Board).

NOTE 1.
Chart 60 summarises all possible routings through the C4 board (as well as C1/C2, C3 and C5). It is worthwile checking the chart prior to detailed faultfinding, as significant deductions can be made that may eliminate suspicion of C4. For example, it can be seen from the chart that if only the RF GEN frequencies from 144MHz to 199.999999MHz are faulty, it is likely the C3 200MHz LPF is at fault.

NOTE 2.
Remove Signal Generator RF tray lid. Select Rx TEST mode with RF GEN FREQ = 500MHz.

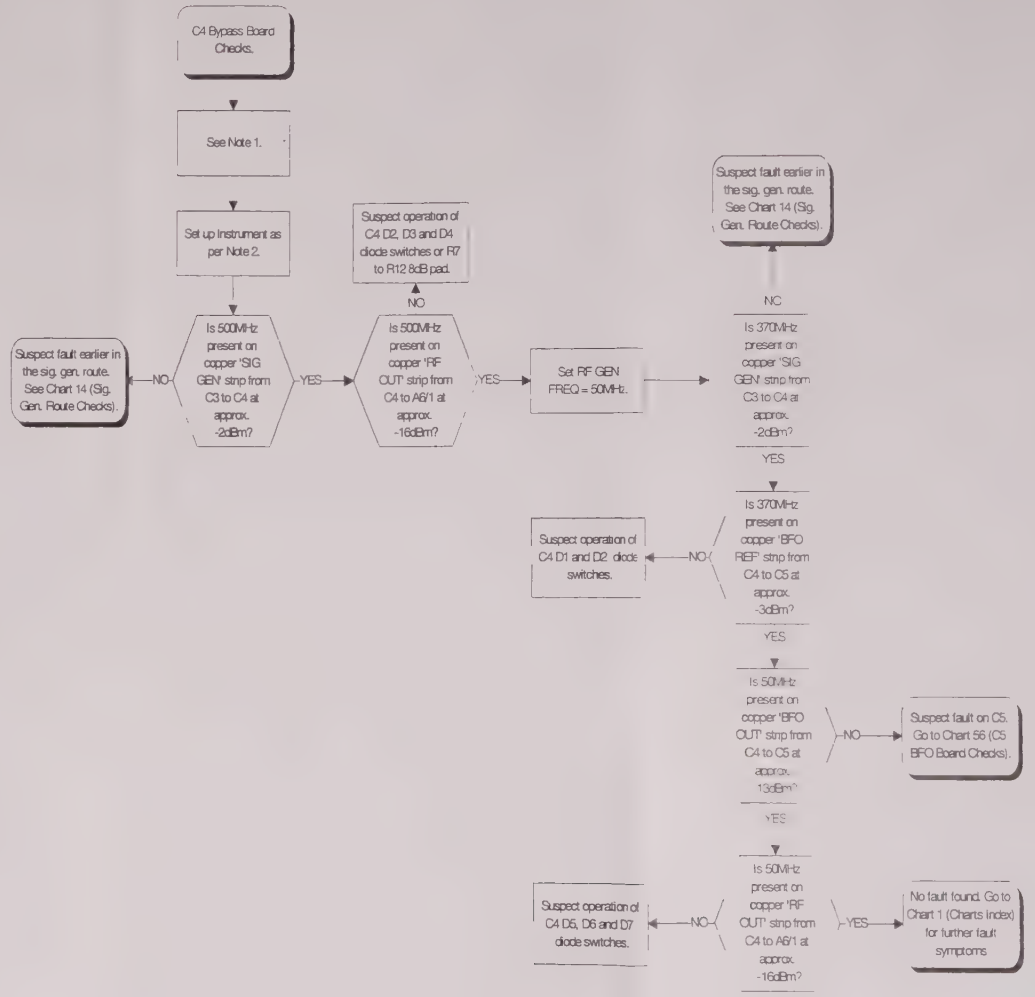

Chart 55
C4 Bypass Board Checks

Chart 56
C5 BFO Board Checks

Associated Circuit Diagrams:
Z44830/113 (C1 RF Generator Control Board).
Z44830/104 (C2 RF Oscillator Board).
Z44830/105 (C3 RF Divider Board).
Z44830/106 (C4 Bypass Board).
Z44830/107 (C5 BFO Board).

NOTE 1.
Chart 60 summarises all possible routings through the C5 board (as well as C1/C2, C3 and C4). It is worthwile checking the chart prior to detailed faultfinding, as significant deductions can be made that may eliminate suspicion of C5. For example, it can be seen from the chart that if only the RF GEN frequencies from 0.4MHz to 39.999999MHz are faulty, it is likely the C2 576MHz to 720MHz VCO is at fault.

NOTE 2.
Remove Signal Generator RF tray lid. Select Rx TEST mode with RF GEN FREQ = 50MHz.

NOTE 3.
The 1280MHz LO is the 2nd LO for the receiver. Therefore, if the spectrum analyser is working correctly, it is likely that the 2nd LO is operational, but is simply not being routed correctly to C5.

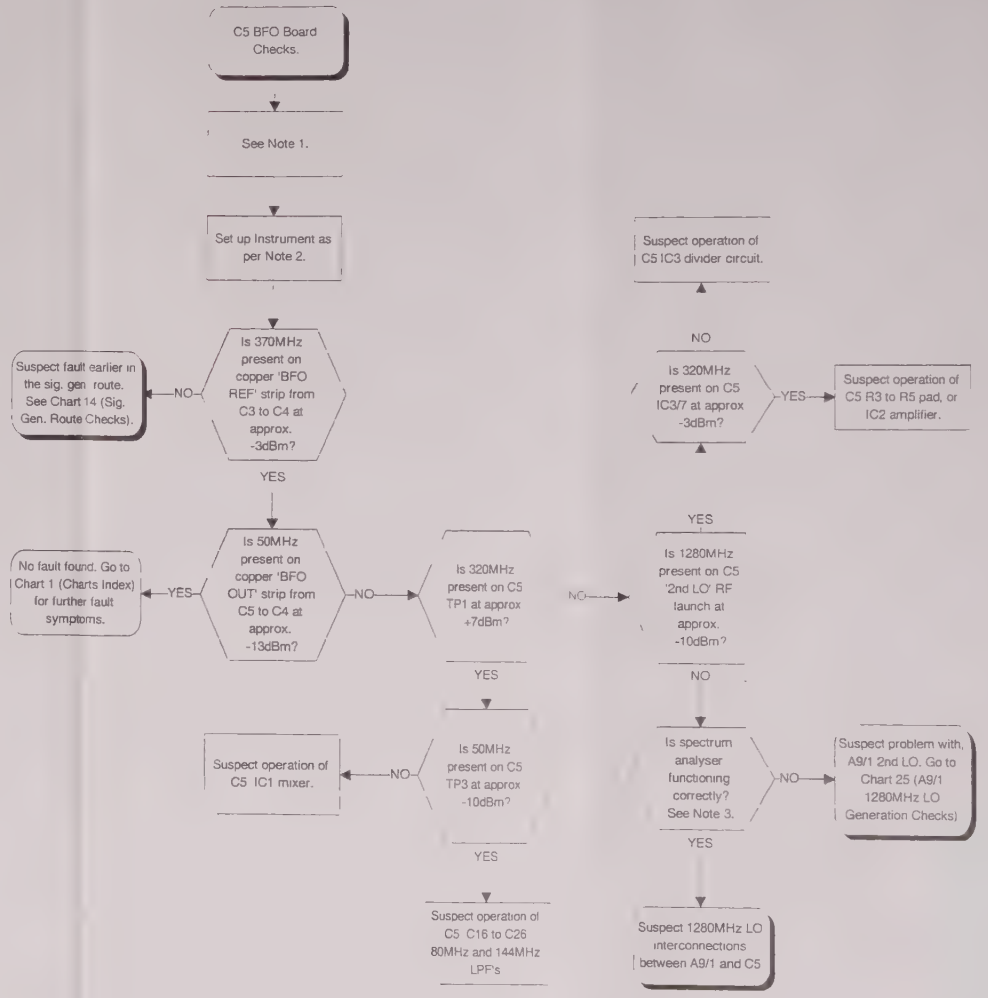

Chart 56
C5 BFO Board Checks

Chart 60
Signal Generator Frequency Derivation Plan

2945 Option 40 / 2947 Signal Generator Frequency Derivation Plan

Signal Generator Output Frequency / MHz	C2 576 to 720MHZ VCO	AF3 720 to 912MHz VCO	AF3 912 to 1152MHz VCO	C3 Unity Gain Path	C3 Divide-by-two Path	C3 Divide-by-four Path	C3 Divide-by-eight Path	C3 100MHz LPF	C3 140MH z LPF	C3 200MH z LPF	C3 280MH z LPF	C3 400MH z LPF	C3 575MH z LPF	C3 800MH z LPF	C3 1200MHz LPF	C4 BFO Bypass Path	C4 BFO Send Path	C5 BFO
0.4 to 39.999999	✓				✓							✓					✓	✓
40 to 71.999999		✓			✓							✓					✓	✓
72 to 89.999999	✓						✓	✓	✓		✓		✓			✓		
90 to 99.999999		✓					✓	✓	✓		✓		✓			✓		
100 to 113.999999		✓					✓		✓		✓		✓			✓		
114 to 143.999999			✓				✓		✓		✓		✓			✓		
144 to 179.999999	✓					✓				✓	✓		✓			✓		
180 to 199.999999		✓				✓				✓	✓		✓			✓		
200 to 227.999999		✓				✓					✓		✓			✓		
228 to 287.999999			✓			✓					✓		✓			✓		
288 to 359.999999	✓				✓							✓	✓			✓		
360 to 399.999999		✓			✓							✓	✓			✓		
400 to 455.999999		✓			✓								✓			✓		
456 to 575.999999			✓		✓								✓			✓		
576 to 719.999999	✓			✓										✓		✓		
720 to 799.999999		✓		✓										✓		✓		
800 to 911.999999		✓		✓										✓		✓		
912 to 1050.00000			✓	✓											✓	✓		

NOTE 1.
The signal generator output can be derived from one of three VCO's. One VCO (576-720MHz) is located on C2 and the other two are located on AF3, a daughterboard to C2 (720 to 912MHz and 912-1152MHz). The relevant VCO output frequency may then remain the same or be divided by two, four or eight on C3 to obtain signal generator frequencies below 576MHz before being filtered. Filtering also occurs on C3 and is performed by a combination of eight low pass filters. Finally, for output frequencies below 72MHz a further BFO mixing process takes place. C4 routes the filtered signal to C5 to be mixed with a quarter of the 1280MHz LO (320MHz), after which it passes to the A6/1 Output Amplifier. Otherwise, for output frequencies above 72MHz, C4 routes the filtered signal directly to A6/1. The above table summarises how the various frequency bands are derived in this way.

For example, to obtain output frequencies between 100MHz and 113.999999MHz the output from the 720-912MHz VCO is divided by eight and subsequently filtered by the 140, 280 and 575MHz low pass filters. The output signal is then routed directly to the A6/1 Output Amplifier via the C4 BFO bypass path.

Chart 60
Signal Generator Frequency Derivation Plan

Chart 61
Signal Generator RF Oscillator Output Frequency Table

Relationship Between Requested RF GEN FREQ and Output Frequency from C2 To C3.

Signal Generator Output Frequency / MHz			Frequency Of C3 'OSC FREQ' o/p to C3 / MHz
0.4	to	39.999999	(F+320) x 2
40	to	71.999999	(F+320) x 2
72	to	89.999999	F x 8
90	to	99.999999	F x 8
100	to	113.999999	F x 8
114	to	143.999999	F x 8
144	to	179.999999	F x 4
180	to	199.999999	F x 4
200	to	227.999999	F x 4
228	to	287.999999	F x 4
288	to	359.999999	F x 2
360	to	399.999999	F x 2
400	to	455.999999	F x 2
456	to	575.999999	F x 2
576	to	719.999999	F
720	to	799.999999	F
800	to	911.999999	F
912	to	1050.00000	F

(Where F = Requested RF GEN FREQ)

Chart 61
Signal Generator RF Oscillator Output Frequency Table

Chart 70
B3/1 Analogue Cellular Option Checks

Associated Circuit Diagrams:
44991/200 (2947 Interconnections Diagram).
44991/229 (Option 40 Interconnections Diagram).
44830/181 (B3/1 Analogue Cellular Controller Board).

NOTE 1.
A microprocessor fault would prevent the analogue cellular option from beginning to run. Symptoms of this may be an inability to enter SYSTEM or Cell mode, crashing of the instrument having entered SYSTEM or Cell mode, the inability of the instrument to power up when B3/1 is fitted, or that the number after 'Analogue Systems Card' in the HELP / SETUP screen is not fff.

NOTE 2.
Press the MEM key and enter '0', '1'. Press SYSTEM key. Press 'Cell' softkey. Select 'NMT 450/900' (this may require a password). Press MANUAL softkey.

NOTE 3.
It has been established that B3/1 is generating modulation. This modulation is then used to modulate the instrument signal generator. Assuming the modulation is correct and suitable for the radio under test (if not, check SYSTEM settings) and that the radio under test responds correctly, the reply is downconverted by the instrument receiver, demodulated and returned to B3/1. Clearly, incorrect operation could imply a fault at any stage in this process. In order to condemn B3/1 it is therefore necessary to eliminate incorrect operation of the instrument signal generator and receiver using the relevant chart(s) found in Chart 1 (Charts Index). Alternatively, use Chart 53 (B3/1 Receive Checks) to eliminate the possibility of a B3/1 receive fault.

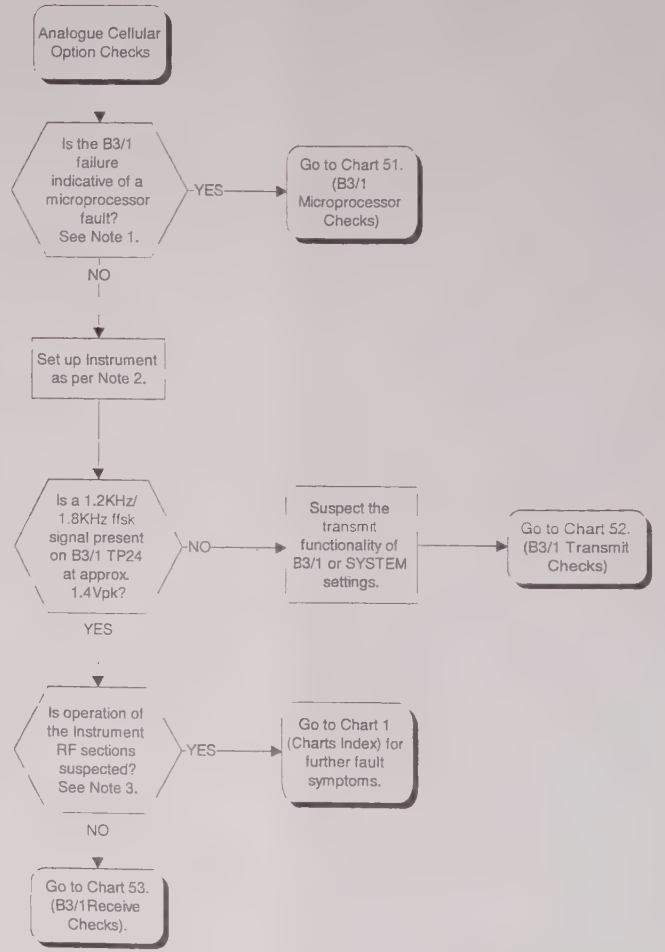

Chart 70
B3/1 Analogue Cellular Option Checks

Chart 71
B3/1 Microprocessor Checks

Associated Circuit Diagrams:
44991/200 (2947 Interconnections Diagram).
44991/229 (Option 40 Interconnections Diagram).
44830/181 (B3/1 Analogue Cellular Controller Board).

NOTE 1.
The signal on B3/1 IC12/19 is a fault indicator. Its absence indicates a fundamental microprocessor fault. Initially, check the connections on B3/1 IC13, IC16, IC17, IC9, IC10, IC11(a, b and d), IC7(b) and IC15.
Subsequently, check that the voltage on B3/1 IC13/19 and IC13/20 is 0V at power-up and becomes +5V shortly after power-up.
Ensure the 10MHz reference is present on B3/1 IC13/15.

NOTE 2.
The number displayed after 'Analog Systems Card' is a hexadecimal number. Converted to binary, it represents a number whose bits are defined as follows:

Bit 0 - Code running
If low, re-perform this flowchart checking more thoroughly

Bit 1 - IC22 clock tick
If low,
If gate array is ISS 4, connect B3/1 TP27 to GND and monitor TP33 for a square wave. If the square wave is not present, the device is not programmed, therefore change device.
Check connections on B3/1 IC22/9, 10, 11, 12, 13, 16,17, 18, 19, 20, 22, 23, 24, 26, 27 and 52. If good, change device.

Bit 2 - DSP's present
If low, check connections on pins 18, 20, 40 and 42 on B3/1 IC23, IC24 and IC25

Bit 3 - DSP1 boot code sent
If low, check B3/1 IC23/45

Bit 4 - DSP2 boot code sent
If low, check B3/1 IC24/45

Bit 5 - DSP3 boot code sent
If low, check B3/1 IC25/45

Bit 6 - DSP1 boot code confirmed
If low, check connections on B3/1 IC23/1, 3, 4, 5, 6, 38, 44, 66, 67 and 68.

Bit 7 - DSP2 boot code confirmed
If low, check connections on B3/1 IC24/1, 3, 4, 5, 6, 38, 44, 66, 67 and 68.

Bit 8 - DSP3 boot code confirmed
If low, check connections on B3/1 IC25/1, 3, 4, 5, 6, 38, 44, 66, 67 and 68

Bit 9 - DSP1 application loaded
If low, check connections on B3/1 IC23/7, 8, 9, 11, 12, 13, 14, 15, 32, 33 and 34

Bit 10 - DSP2 application loaded
If low, check connections on B3/1 IC24/7, 8, 9, 11, 12, 13, 14, 15, 31, 32 and 33

Bit 11 - Memory battery voltage
If low, check the battery voltage on B3/1 PLL/2. This should be 3V

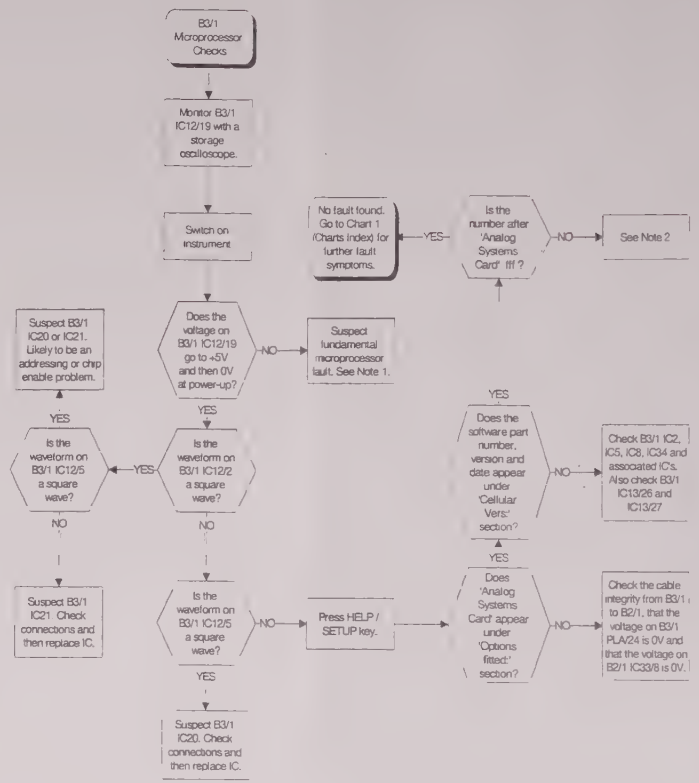

Chart 71
B3/1 Microprocessor Checks

Chart 72
B3/1 Transmit Checks

Associated Circuit Diagrams:
44991/200 (2947 Interconnections Diagram).
44991/229 (Option 40 Interconnections Diagram).
44830/181 (B3/1 Analogue Cellular Controller Board).

NOTE 1.
Switch on Instrument. Press the MEM key and enter '0', '1'. Press SYSTEM key. Press 'Cell' softkey. Select 'NMT 450/900' (this may require a password). Press MANUAL softkey.

NOTE 2.
It has been established that B3/1 is generating modulation. This modulation is then used to modulate the Instrument signal generator. Assuming the modulation is correct and suitable for the radio under test (if not, check SYSTEM settings) and that the radio under test responds correctly, the reply is downconverted by the Instrument receiver, demodulated and returned to B3/1. Clearly, incorrect operation could imply a fault at any stage in this process. In order to condemn B3/1, it is therefore necessary to eliminate incorrect operation of the Instrument signal generator and receiver using the relevant chart(s) found in Chart 1 (Charts Index). Alternatively, use Chart 53 (B3/1 Receive Checks) to eliminate the possibility of a B3/1 receive fault.

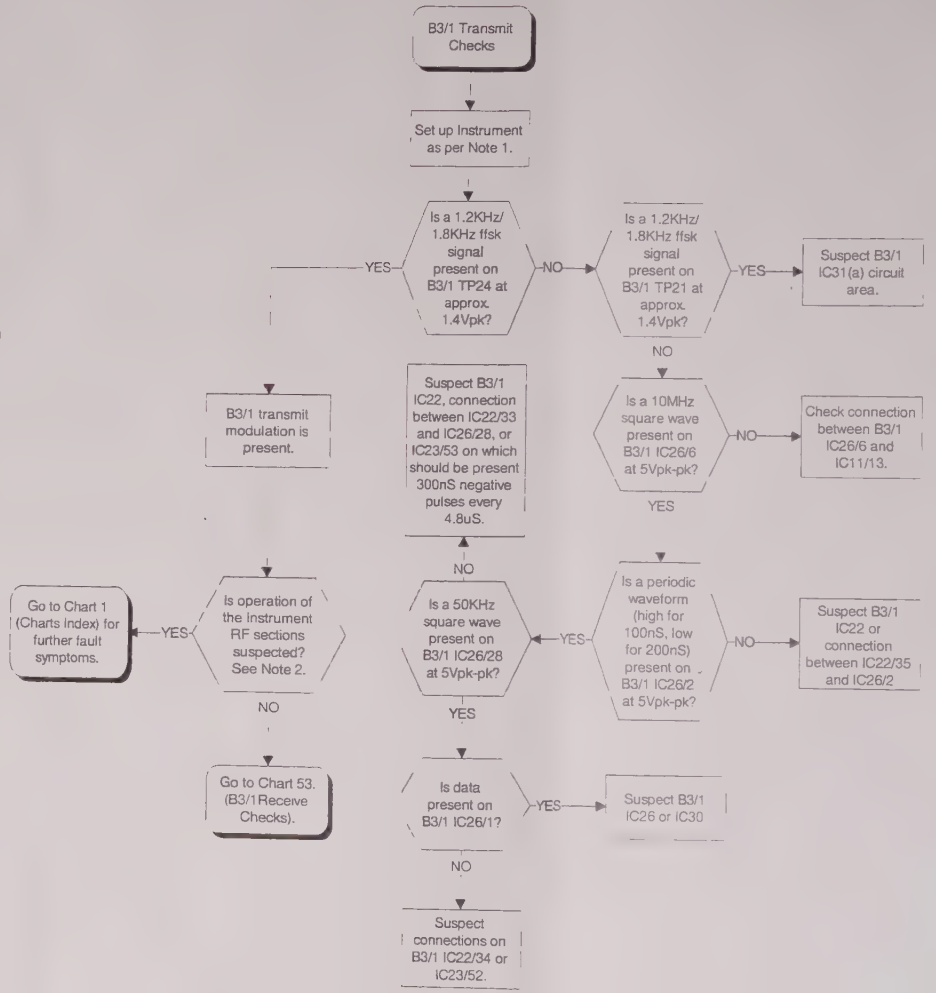

Chart 72
B3/1 Transmit Checks

Chart 73
B3/1 Receive Checks

Associated Circuit Diagrams:
Z44830/113 (C1 RF Generator Control Board).
Z44830/104 (C2 RF Oscillator Board).
Z44830/105 (C3 RF Divider Board).
Z44830/106 (C4 Bypass Board).
Z44830/107 (C5 BFO Board).

NOTE 1.
Chart 60 summarises all possible routings through the C4 board (as well as C1/C2, C3 and C5). It is worthwile checking the chart prior to detailed faultfinding, as significant deductions can be made that may eliminate suspicion of C4. For example, it can be seen from the chart that if only the RF GEN frequencies from 144MHz to 199.999999MHz are faulty, it is likely the C3 200MHz LPF is at fault.

NOTE 2.
Remove Signal Generator RF tray lid. Select Rx TEST mode with RF GEN FREQ = 500MHz.

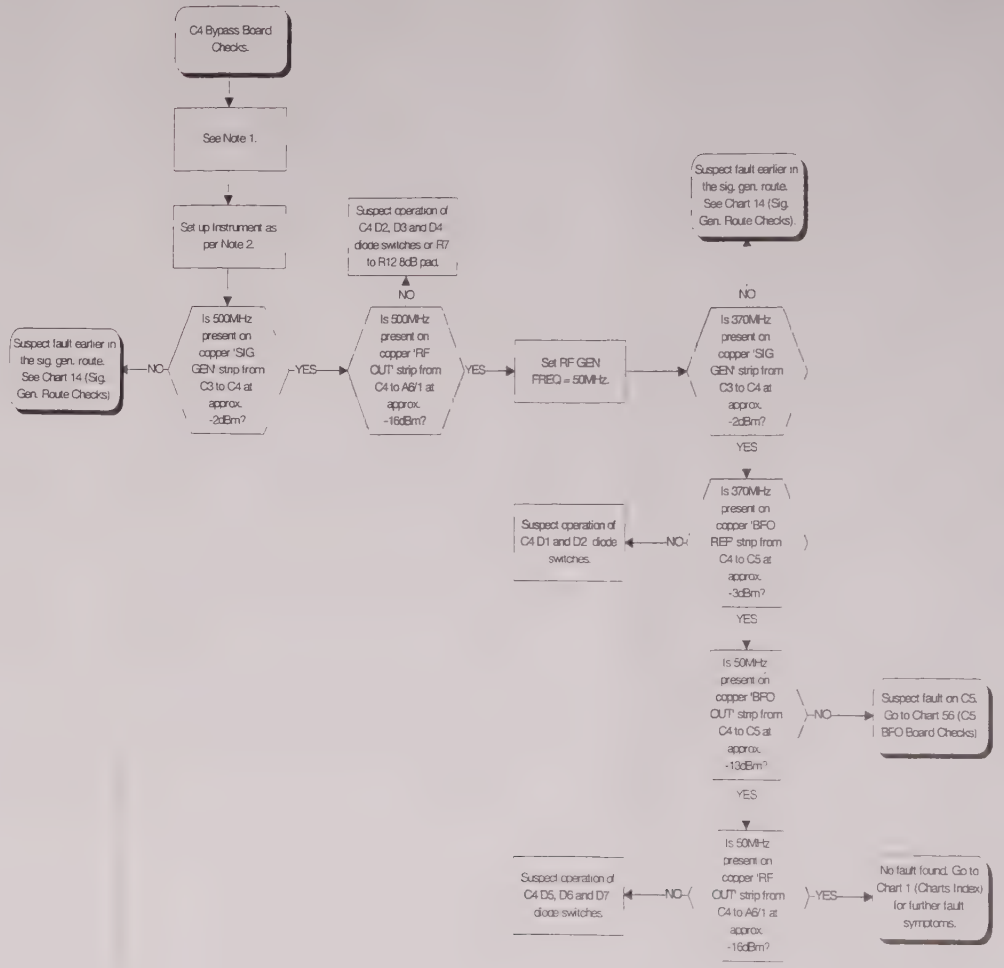

Chart 73
B3/1 Receive Checks

Chapter 6
REPLACEABLE PARTS

Contents

	Unit	Page
ELECTRICAL COMPONENTS		**6-3**
Overall assembly	A0	6-3
1.28 GHz - 2.41 GHz oscillator	AA1	6-5
Input mixer	A2	6-6
2nd & 3rd mixer	A3	6-9
10.7 MHz IF & Log Amp	A4/1	6-13
Output amplifier	A6/1	6-22
1st local oscillator control	A7/1	6-25
1st local oscillator	A8/1	6-27
2nd & 3rd local oscillator	A9/1	6-33
90 MHz swept local oscillator	A10	6-42
Input switch and power meter	A11/1	6-46
SSB demodulator	A15	6-51
3 stage attenuator	A20	6-54
2 stage attenuator	A21	6-56
Audio processor board	B1/2	6-58
Microprocessor	B2/1	6-81
Analogue cellular	B3/1	6-94
600 Ω interface	B4	6-98
GPIB interface	B7	6-99
Memory card and date/time stamp board	B12	6-100
RF generator control	C1	6-101
RF oscillator	C2	6-106
RF divider	C3	6-114
Bypass board	C4	6-120
BFO	C5	6-122
RF tray interconnection PCB (signal generator)	C6	6-124
Voltage controlled oscillator	AF3	6-126
MECHANICAL PARTS		**6-128**
Overall assembly	AO	6-129
1.28 GHz - 2.41 GHz oscillator	AA1	6-142
Input mixer	A2	6-143
2nd & 3rd mixer	A3	6-144
10.7 MHz IF & Log Amp	A4/1	6-145
Output amplifier	A6/1	6-146
1st local oscillator control	A7	6-147
1st local oscillator	A8	6-148
2nd & 3rd local oscillator	A9/1	6-149
90 MHz swept local oscillator	A10	6-150
Input switch and power meter	A11/1	6-151
SSB demodulator	A15	6-152
3 stage attenuator	A20	6-153
2 stage attenuator	A21	6-154
Audio processor board	B1/2	6-155
Microprocessor	B2/1	6-156
Analogue cellular	B3/1	6-157
600Ω interface	B4	6-158
GPIB interface	B7	6-159
Memory card and date/time stamp board	B12	6-160
RF generator control	C1	6-161

Contents

	Unit	Page
RF oscillator	C2	6-162
RF driver	C3	6-163
Bypass board	C4	6-164
BFO board	C5	6-165
RF tray interconnection PCB (signal generator)	C6	6-166
Voltage controlled oscillator	AF3	6-167

Introduction

Each sub-assembly or printed circuit board in this equipment has been allocated a reference designator code, e.g. A0, A1, A2 etc.

The complete component reference includes its reference designator as a prefix e.g. A2C1 (capacitor C1 on sub-assembly A2) but for convenience in the text and diagrams, the prefix is omitted unless it is needed to avoid confusion. However, when ordering replacements or in correspondence, the complete component reference should be quoted.

Component values

One or more of the components fitted in the equipment may differ from those listed in this chapter for any of the following reasons:

(a) Components indicated by an * (or SIC) have their values selected during test to achieve particular performance limits.

(b) Owing to supply difficulties, components of different value or type may be substituted provided the overall performance of the equipment is maintained.

(c) As part of a policy of continuous development, components may be changed in value or type to obtain detail improvements in performance.

When there is a difference between the component fitted and the one listed, always use as a replacement the same type and value as found in the equipment.

The Component List includes information about one source of manufacture for each part along with that manufacturer's part number. Sources other than those listed may have been used to supply parts used in your equipment. Alternative replacement devices can often be obtained from other manufacturers but the user must satisfy himself that the items are equivalent in all significant parameters before fitting to the equipment. Where the manufacturer is listed as Marconi Instruments, the part can only be obtained from our Service Division or your nearest Agent.

Ordering

When ordering replacements, address the order to our Service Division (address at rear of manual) or nearest agent and specify the following for each component required:-

(1) Type and serial number of equipment, as given on the serial number label at the rear of the equipment. If this is superseded by a model number label, quote the model number instead of the type number.

(2) Complete circuit reference.

(3) Description.

(4) Part number.

ELECTRICAL COMPONENTS

Cir. Ref.	MI part number	Description	Manufacturer	Manufacturer's part number
Overall assembly	**A0**			
		When ordering, prefix circuit reference with A0.		
	44991/200	Complete unit	Issue J	
C1 to C103	26397/205	FILTER RFI-SUPPRESSION, 1.5nF MIN, 350V DC, FEED-THROUGH, CERAMIC, PI-CIRCUIT, SOLDER-IN.	BECK ELECTRONICS	TPS003A
C104	26343/446	CAPACITOR-FIXED CERAMIC 180pF +/-2% 63V N750 SINGLELAYER, RADIAL, 2.5mm PWP, (TAPED).	VISHAY COMPONENTS	ROU-181-GAK-ACR-J
C104 to C133	26397/205	FILTER RFI-SUPPRESSION, 1.5nF MIN, 350V DC, FEED-THROUGH, CERAMIC, PI-CIRCUIT, SOLDER-IN.	BECK ELECTRONICS	TPS003A
C146	26333/228	CAPACITOR-FIXED CERAMIC 10pF +/-10% 300V NP0 FEED-THROUGH, SOLDER-IN MOUNTING, 3.9mm MOUNTING	FERROPERM UK LTD	10p110,24XXX-94511/1
C147	26346/120	CAPACITOR-FIXED CERAMIC 10nF +/-20% 50V X7R MULTILAYER, AXIAL, EPOXY COVERED BODY, (TAPED).	PHILIPS	A41C 103K-DRM
C148	26346/120	CAPACITOR-FIXED CERAMIC 10nF +/-20% 50V X7R MULTILAYER, AXIAL, EPOXY COVERED BODY, (TAPED).	PHILIPS	A41C 103K-DRM
C149	26582/421	CAPACITOR-FIXED POLYESTER 4.7uF +/-10% 63V RADIAL, 22.5mm PWP, (LOOSE).	VISHAY COMPONENTS	MKT-1822-547/065
C150	26346/120	CAPACITOR-FIXED CERAMIC 10nF +/-20% 50V X7R MULTILAYER, AXIAL, EPOXY COVERED BODY, (TAPED).	PHILIPS	A41C 103K-DRM
C151	26383/587	CAPACITOR-FIXED CERAMIC 2.2nF +/-10% 63V 2C2 SINGLELAYER, RADIAL, 2.5mm PWP, (TAPED).	PHILIPS	2222-630-51222
FB1 to FB6	23635/845	CORE BEAD, 8mm DIA, 10mm LONG, 3mm I/DIA, FERRITE, GRADE 4S2, SINGLE HOLE, CODED YELLOW,	PHILIPS	4330-030-33200
FS1	23411/060	FUSE TIME-LAG 2A RATING, 20mm LONG x 5mm DIA, 250V AC, GLASS CASE, SPIRAL OR SPRING CONSTRUCTION, VDE	LITTELFUSE TRACOR	213002.
FS2	23411/074	FUSE TIME-LAG 10A RATING, 20mm LONG x 5mm DIA, CERAMIC CASE, 1000A BREAKING CAPACITY @ 250V.	SCHURTER SWITZERLAND	SPT-0001-2514
LS1	23646/109	LOUDSPEAKER ROUND, 8R 200mW - 2.25in DIA, 0.85in DEEP.	ALTAI (TAIWAN)	L010
R1 to R3	25761/005	RESISTOR-VARIABLE CONDUCTIVE-PLASTIC LINEAR, 50K 20% 250mW 200V SINGLE-TURN, PANEL-MTG, SQUARE,	MEGGITT ELECTRONICS	12P/E454/8/12101/019
R101	24772/073	RESISTOR-FIXED METAL-FILM 1K +/- 2% 125mW 150V 100 ppm/DEG.C, AXIAL, (TAPED).	VISHAY COMPONENTS	NK3-1K-2%
SKA	23443/449	CONNECTOR-RF BNC-TYPE FEMALE, RECEPTACLE, 50 OHMS, BULKHEAD, SOLDER-BUCKET, INSULATED, FRONT MTG,	AMPHENOL LTD	31-10
SKB	23443/449	CONNECTOR-RF BNC-TYPE FEMALE, RECEPTACLE, 50 OHMS, BULKHEAD, SOLDER-BUCKET, INSULATED, FRONT MTG,	AMPHENOL LTD	31-10
SKC to SKE	23443/442	CONNECTOR-RF BNC-TYPE FEMALE, RECEPTACLE, 50 OHMS, BULKHEAD, SOLDER-BUCKET, FRONT MOUNTING, NICKEL		

Cir. Ref.	MI part number	Description	Manufacturer	Manufacturer's part number
Overall assembly A0 (contd.)				
SKF to SKK	23444/509	CONNECTOR-RF SMA-TYPE FEMALE, RECEPTACLE, 50 OHMS, FLANGED, SOLDER-BUCKET, FLUSH DIELEC, 12.7mm SQ	ITT CANNON (UK)	050-645-9019-890
SKL	23444/551	CONNECTOR-RF SMA-TYPE MALE, PLUG, 50 OHMS, FLANGED, SOLDER-BUCKET, 12.7mm SQ FLANGE, 4 HOLES	ITT CANNON (UK)	050-646-4504-310
SKM	23444/505	CONNECTOR-RF SMA-TYPE FEMALE, JACK, 50 OHMS, ELBOW, FLANGED, SOLDER-BUCKET, 12.7mm SQUARE	ITT CANNON (UK)	050-647-4504-890
SKN	23444/505	CONNECTOR-RF SMA-TYPE FEMALE, JACK, 50 OHMS, ELBOW, FLANGED, SOLDER-BUCKET, 12.7mm SQUARE	ITT CANNON (UK)	050-647-4504-890
X1	23423/177	CONNECTOR MAINS, PLUG, 3 WAY, RF FILTER, SINGLE FUSE, 4A, 250V, PANEL MOUNTING, SOLDER TAG TERMS,	A.F. BULGIN & CO PLC	PS20/A0620/28
X2	44991/146	FAN AXIAL-FLOW, BRUSHLESS, ASSEMBLY, 12V DC, 230mA 1.9W 3200 RPM, 54 CU.MTR/HR, 34 dBA-MAX NOISE, 80		
X6	44991/179	POWER-SUPPLY SWITCH MODE UNIT, 65W, 180 - 264VAC OR 90 - 132VAC & 11V - 32VDC INPUTS, 5V 12V 24V &		
X8	23467/260	MODULE OPTO SHAFT ENCODER, 64 CYCLES/REV, 5V 26mA 0.25in DIA PLAIN SHAFT, 0.625in LONG, 3/8"-32UNEF	BOURNS ELECTRONICS	ENA1J-B20-L00064
X10	28624/308	DISPLAY LIQUID CRYSTAL, BLUE, FAST, 400 x 200 DOT MATRIX, 162mm x 84mm VIEWING AREA, GRAPHIC MODULE	EPSON (UK) LTD	ECM-A0310-1

Cir. Ref.	MI part number	Description	Manufacturer	Manufacturer's part number

1.28 GHz - 2.41 GHz oscillator AA1

When ordering, prefix circuit reference with AA1

	44830-160	Complete unit	Issue C	
C1 to C3	26386/863	CAPACITOR-FIXED CERAMIC 1nF +/-10% 50V X7R/2C1, MULTILAYER, SURFACE-MOUNTED, SIZE 0805, NICKEL	ROHM ELECTRONICS LTD	MCH21-5C-102-KP
C4	26386/787	CAPACITOR-FIXED CERAMIC 27pF +/-2% 50V 60 ppm/DEG.C, HIGH-Q, SINGLELAYER, SURFACE-MOUNTED,	AVX LTD	0805-5K-270-GAW
C5	26386/975	CAPACITOR-FIXED CERAMIC 6.8pF +/-0.1pF 50V 60 ppm/DEG.C, HIGH-Q, SINGLELAYER, SURFACE-MOUNTED,	AVX LTD	0805-5K-6R8-BAW-TR
C6	26386/824	CAPACITOR-FIXED CERAMIC 100pF +/-5% 50V NP0 MULTILAYER, SURFACE-MOUNTED, SIZE 0805, NICKEL	ROHM ELECTRONICS LTD	MCH21-5A-101-JP
C7	26386/824	CAPACITOR-FIXED CERAMIC 100pF +/-5% 50V NP0 MULTILAYER, SURFACE-MOUNTED, SIZE 0805, NICKEL	ROHM ELECTRONICS LTD	MCH21-5A-101-JP
D1	28381/530	DIODE VARIABLE CAPACITNCE, BB215... 30V 20mA 2.2pF @ 28V, CAPAC RATIO 7.6 MIN, MARKING GREEN, SURFACE	PHILIPS	BB215
D2	28381/530	DIODE VARIABLE CAPACITNCE, BB215... 30V 20mA 2.2pF @ 28V, CAPAC RATIO 7.6 MIN, MARKING GREEN, SURFACE	PHILIPS	BB215
L1 to L3	23642/535	INDUCTOR-FIXED 1uH +/- 5% EPOXY-MOULD, 400mA 0R7 MAX, 30 Q @ 7.96 MHz, 120 MHz SRF, SURFACE	MEGGITT ELECTRONICS	3612-T-1R0-J
R1	24811/175	RESISTOR-FIXED METAL-FILM 1K21 +/- 1% 250mW 200V 50 ppm/DEG.C, SURFACE MOUNTED, SIZE MINI-MELF,	VISHAY COMPONENTS	SMM0204-1K21-1%50ppm
R2	24811/171	RESISTOR-FIXED METAL-FILM 825R +/- 1% 250mW 200V 50 ppm/DEG.C, SURFACE MOUNTED, SIZE MINI-MELF,	VISHAY COMPONENTS	SMM0204-825R-1%50ppm
R3	24811/928	RESISTOR-FIXED METAL-FILM 121R +/- 1% 250mW 200V 50 ppm/DEG.C, LOW-INDUCTANCE, SURFACE MOUNTED,	VISHAY COMPONENTS	SMM0204-HF-121R-1%
R4	24321/412	RESISTOR-FIXED METAL-GLAZE 33R +/- 2% 100mW 100V 200 ppm/DEG.C, Ni-BARRIER & REFLOW HOT-DIP SOLDER,	VTM (UK) LTD	503-0-33R-1%-100ppm
R5	24321/411	RESISTOR-FIXED METAL-GLAZE 30R +/- 2% 100mW 100V 200 ppm/DEG.C, Ni-BARRIER & REFLOW HOT-DIP SOLDER,	VTM (UK) LTD	503-0-30R-1%-100ppm
R6	24321/410	RESISTOR-FIXED METAL-GLAZE 27R +/- 2% 100mW 100V 200 ppm/DEG.C, Ni-BARRIER & REFLOW HOT-DIP SOLDER,	VTM (UK) LTD	503-0-27R-1%-100ppm
R7	24321/411	RESISTOR-FIXED METAL-GLAZE 30R +/- 2% 100mW 100V 200 ppm/DEG.C, Ni-BARRIER & REFLOW HOT-DIP SOLDER,	VTM (UK) LTD	503-0-30R-1%-100ppm
TR1	28457/866	TRANSISTOR NPN BIPOLAR NE85634... 10V 6.5GHz 40mA 50hFE MIN @ 20mA, PWR GAIN 9.5dB @ 1GHz, SURFACE	NEC ELECTRONICS LTD	NE85634-T1

Cir. Ref.	MI part number	Description	Manufacturer	Manufacturer's part number

Input mixer A2

When ordering, prefix circuit reference with A2.

	44829-922	Complete unit	Issue 9	
C1	26386/992	CAPACITOR-FIXED CERAMIC 330nF +/-10% 50V X7R, MULTILAYER, SURFACE-MOUNTED, SIZE 1812, NICKEL	PHILIPS	1812-2B-334-K9BB
C4 to C7	26386/875	CAPACITOR-FIXED CERAMIC 10nF +/-10% 50V X7R/2C1, MULTILAYER, SURFACE-MOUNTED, SIZE 0805, NICKEL	ROHM ELECTRONICS LTD	MCH21-5C-103-KP
C8	26386/760	CAPACITOR-FIXED CERAMIC 220nF +/-10% 50V X7R MULTILAYER, SURFACE-MOUNTED, SIZE 1210, NICKEL	PHILIPS	1210-2R-224-K9-BB
C9	26386/760	CAPACITOR-FIXED CERAMIC 220nF +/-10% 50V X7R MULTILAYER, SURFACE-MOUNTED, SIZE 1210, NICKEL	PHILIPS	1210-2R-224-K9-BB
C10	26386/875	CAPACITOR-FIXED CERAMIC 10nF +/-10% 50V X7R/2C1, MULTILAYER, SURFACE-MOUNTED, SIZE 0805, NICKEL	ROHM ELECTRONICS LTD	MCH21-5C-103-KP
C11	26386/992	CAPACITOR-FIXED CERAMIC 330nF +/-10% 50V X7R, MULTILAYER, SURFACE-MOUNTED, SIZE 1812, NICKEL	PHILIPS	1812-2B-334-K9BB
C12	26386/899	CAPACITOR-FIXED CERAMIC 100nF +/-10% 50V X7R/2C1, MULTILAYER, SURFACE-MOUNTED, SIZE 1206, NICKEL	ROHM ELECTRONICS LTD	MCH31-5C-104-KP
C13	26386/970	CAPACITOR-FIXED CERAMIC 1.5pF +/-0.1pF 50V 60 ppm/DEG.C, HIGH-Q, SINGLELAYER, SURFACE-MOUNTED,	AVX LTD	0805-5K-1R5-BAW-TR
C14	26386/897	CAPACITOR-FIXED CERAMIC 4.7pF +/-0.1pF 50V 60 ppm/DEG.C, HIGH-Q, SINGLELAYER, SURFACE-MOUNTED,	AVX LTD	0805-5K4R7-BAW-TR
C15	26386/972	CAPACITOR-FIXED CERAMIC 2.7pF +/-0.1pF 50V 60 ppm/DEG.C, HIGH-Q, SINGLELAYER, SURFACE-MOUNTED,	AVX LTD	0805-5K-2R7-BAW-TR
C16	26386/897	CAPACITOR-FIXED CERAMIC 4.7pF +/-0.1pF 50V 60 ppm/DEG.C, HIGH-Q, SINGLELAYER, SURFACE-MOUNTED,	AVX LTD	0805-5K4R7-BAW-TR
C17	26386/970	CAPACITOR-FIXED CERAMIC 1.5pF +/-0.1pF 50V 60 ppm/DEG.C, HIGH-Q, SINGLELAYER, SURFACE-MOUNTED,	AVX LTD	0805-5K-1R5-BAW-TR
C18	26386/824	CAPACITOR-FIXED CERAMIC 100pF +/-5% 50V NP0 MULTILAYER, SURFACE-MOUNTED, SIZE 0805, NICKEL	ROHM ELECTRONICS LTD	MCH21-5A-101-JP
C19	26451/009	CAPACITOR-FIXED ALUMINIUM 47uF +/-20% 16V ELECTROLYTIC, SURFACE-MOUNTED, SIZE 6.6 x 6.6mm,	PANASONIC INDUSTRIAL	ECE-V-1CA-470P
C22	26386/992	CAPACITOR-FIXED CERAMIC 330nF +/-10% 50V X7R, MULTILAYER, SURFACE-MOUNTED, SIZE 1812, NICKEL	PHILIPS	1812-2B-334-K9BB
D2	28383/932	DIODE PIN, HSMP-3810... 250mW 100V 1A 0.35pF Rs 4R0 MAX @ 100mA, MARKED E0, LOW PROFILE, SURFACE	HEWLETT-PACKARD	HSMP-3810-L31
D3	28335/670	DIODE BAND SWITCHING, BAT18... 35V 100mA 1pF MAX @ 20V, 1.2Vf @ 100mA, MARKING CODE A2, SURFACE	PHILIPS	BAT18/T1
D4	28383/962	DIODE PIN, BAR60... TRIPLE, 100V 0.25pF 1.05Vf @ 100mA, T-CIRCUIT, MARKING CODE 60, SURFACE	SIEMENS LTD	BAR60
D5	28335/670	DIODE BAND SWITCHING, BAT18... 35V 100mA 1pF MAX @ 20V, 1.2Vf @ 100mA, MARKING CODE A2, SURFACE	PHILIPS	BAT18/T1
D8	28371/302	DIODE ZENER, BZX84-C4V7... 350mW 4.7V 5% 250mA MARKING CODE Z1, SURFACE MOUNTED, SOT-23, (TAPED).	PHILIPS	BZX84-C4V7
D12	28383/941	DIODE BAND SWITCHING, BA682... 35V 100mA 1.2pF MAX @ 3V, SURFACE MOUNTED, SOD-80, (8mm TAPE -	PHILIPS	BA682
D13	28383/941	DIODE BAND SWITCHING, BA682... 35V 100mA 1.2pF MAX @ 3V, SURFACE MOUNTED, SOD-80, (8mm TAPE -	PHILIPS	BA682

Cir. Ref.	MI part number	Description	Manufacturer	Manufacturer's part number
Input mixer A2 (contd.)				
IC1	28461/464	IC-ANALOGUE MICROWAVE-AMPLIFIER INA-03184... 4V 10mA GAIN 25dB @ 1.5GHz, 3dB BANDWIDTH DC-2.5GHz,	HEWLETT-PACKARD	INA-03184-TR1
IC2	28531/028	RF-MIXER DOUBLE-BALANCED, DIODE RING, LMX156A-1... 1.0-2.8GHz, 50R 1 dBm RF-1dB COMPRESS, 8 dB LOSS,	MINI-CIRCUITS	LMX-156A-1
L10	23642/064	INDUCTOR-FIXED 1mH +/- 10% UNSCREENED, AIR-CORED, 510mA 1R176 MAX, 20 Q @ 0.796 MHz, 13mm HIGH MAX,	TOKO (UK) LTD	494HYF0140K
L14	23642/535	INDUCTOR-FIXED 1uH +/- 5% MOULDED-EPOXY, 400mA 0R7 MAX, 30 Q @ 7.96 MHz, 120 MHz SRF, SURFACE	MEGGITT ELECTRONICS	3612-T-1R0-J
L15	23642/719	INDUCTOR-FIXED 220uH +/- 5% MOULDED-EPOXY, 50mA 21R MAX, 20 Q @ 0.796 MHz, 7 MHz SRF, SURFACE	MEGGITT ELECTRONICS	3612-T-221-J
L16	23642/535	INDUCTOR-FIXED 1uH +/- 5% MOULDED-EPOXY, 400mA 0R7 MAX, 30 Q @ 7.96 MHz, 120 MHz SRF, SURFACE	MEGGITT ELECTRONICS	3612-T-1R0-J
L17	23642/719	INDUCTOR-FIXED 220uH +/- 5% MOULDED-EPOXY, 50mA 21R MAX, 20 Q @ 0.796 MHz, 7 MHz SRF, SURFACE	MEGGITT ELECTRONICS	3612-T-221-J
L18	23642/535	INDUCTOR-FIXED 1uH +/- 5% MOULDED-EPOXY, 400mA 0R7 MAX, 30 Q @ 7.96 MHz, 120 MHz SRF, SURFACE	MEGGITT ELECTRONICS	3612-T-1R0-J
L19	23642/719	INDUCTOR-FIXED 220uH +/- 5% MOULDED-EPOXY, 50mA 21R MAX, 20 Q @ 0.796 MHz, 7 MHz SRF, SURFACE	MEGGITT ELECTRONICS	3612-T-221-J
R3	24811/167	RESISTOR-FIXED METAL-FILM 562R +/- 1% 250mW 200V 50 ppm/DEG.C, SURFACE MOUNTED, SIZE MINI-MELF,	VISHAY COMPONENTS	SMM0204-562R-1%50ppm
R4	24811/164	RESISTOR-FIXED METAL-FILM 432R +/- 1% 250mW 200V 50 ppm/DEG.C, SURFACE MOUNTED, SIZE MINI-MELF,	VISHAY COMPONENTS	SMM0204-432R-1%50ppm
R5	24811/153	RESISTOR-FIXED METAL-FILM 150R +/- 1% 250mW 200V 50 ppm/DEG.C, SURFACE MOUNTED, SIZE MINI-MELF,	VISHAY COMPONENTS	SMM0204-150R-1%50ppm
R6	24811/173	RESISTOR-FIXED METAL-FILM 1K +/- 1% 250mW 200V 50 ppm/DEG.C, SURFACE MOUNTED, SIZE MINI-MELF, (8mm	VISHAY COMPONENTS	SMM0204-1K0-1%-50ppm
R7	24811/168	RESISTOR-FIXED METAL-FILM 619R +/- 1% 250mW 200V 50 ppm/DEG.C, SURFACE MOUNTED, SIZE MINI-MELF,	VISHAY COMPONENTS	SMM0204-619R-1%50ppm
R8	24811/157	RESISTOR-FIXED METAL-FILM 221R +/- 1% 250mW 200V 50 ppm/DEG.C, SURFACE MOUNTED, SIZE MINI-MELF,	VISHAY COMPONENTS	SMM0204-221R-1%50ppm
R9	24811/155	RESISTOR-FIXED METAL-FILM 182R +/- 1% 250mW 200V 50 ppm/DEG.C, SURFACE MOUNTED, SIZE MINI-MELF,	VISHAY COMPONENTS	SMM0204-182R-1%50ppm
R10	24811/160	RESISTOR-FIXED METAL-FILM 301R +/- 1% 250mW 200V 50 ppm/DEG.C, SURFACE MOUNTED, SIZE MINI-MELF,	VISHAY COMPONENTS	SMM0204-301R-1%50ppm
R11	24811/903	RESISTOR-FIXED METAL-FILM 18R2 +/- 1% 250mW 200V 50 ppm/DEG.C, LOW-INDUCTANCE, SURFACE MOUNTED,	VISHAY COMPONENTS	SMM0204-HF-18R2-1%
R12	24811/160	RESISTOR-FIXED METAL-FILM 301R +/- 1% 250mW 200V 50 ppm/DEG.C, SURFACE MOUNTED, SIZE MINI-MELF,	VISHAY COMPONENTS	SMM0204-301R-1%50ppm
R13	24811/185	RESISTOR-FIXED METAL-FILM 3K32 +/- 1% 250mW 200V 50 ppm/DEG.C, SURFACE MOUNTED, SIZE MINI-MELF,	VISHAY COMPONENTS	SMM0204-3K32-1%50ppm
R14	24811/181	RESISTOR-FIXED METAL-FILM 2K21 +/- 1% 250mW 200V 50 ppm/DEG.C, SURFACE MOUNTED, SIZE MINI-MELF,	VISHAY COMPONENTS	SMM0204-2K21-1%50ppm
R15	24811/173	RESISTOR-FIXED METAL-FILM 1K +/- 1% 250mW 200V 50 ppm/DEG.C, SURFACE MOUNTED, SIZE MINI-MELF, (8mm	VISHAY COMPONENTS	SMM0204-1K0-1%-50ppm
R16	24811/181	RESISTOR-FIXED METAL-FILM 2K21 +/- 1% 250mW 200V 50 ppm/DEG.C, SURFACE MOUNTED, SIZE MINI-MELF,	VISHAY COMPONENTS	SMM0204-2K21-1%50ppm
R17	24811/181	RESISTOR-FIXED METAL-FILM 2K21 +/- 1% 250mW 200V 50 ppm/DEG.C, SURFACE MOUNTED, SIZE MINI-MELF,	VISHAY COMPONENTS	SMM0204-2K21-1%50ppm

Cir. Ref.	MI part number	Description	Manufacturer	Manufacturer's part number
Input mixer A2 (contd.)				
R18	24811/197	RESISTOR-FIXED METAL-FILM 10K +/- 1% 250mW 200V 50 ppm/DEG.C, SURFACE MOUNTED, SIZE MINI-MELF, (8mm	VISHAY COMPONENTS	SMM0204-10K-1%50ppm
R20	24811/155	RESISTOR-FIXED METAL-FILM 182R +/- 1% 250mW 200V 50 ppm/DEG.C, SURFACE MOUNTED, SIZE MINI-MELF,	VISHAY COMPONENTS	SMM0204-182R-1%50ppm
R21	24811/155	RESISTOR-FIXED METAL-FILM 182R +/- 1% 250mW 200V 50 ppm/DEG.C, SURFACE MOUNTED, SIZE MINI-MELF,	VISHAY COMPONENTS	SMM0204-182R-1%50ppm
R23 to R25	24811/173	RESISTOR-FIXED METAL-FILM 1K +/- 1% 250mW 200V 50 ppm/DEG.C, SURFACE MOUNTED, SIZE MINI-MELF, (8mm	VISHAY COMPONENTS	SMM0204-1K0-1%-50ppm
TR1	28487/811	TRANSISTOR NPN BIPOLAR BC818-40... 25V 170MHz 330mW 500mA 250hFE MIN @ 100mA, MARKING CODE 6G,	PHILIPS	BC818-40
TR2	28487/811	TRANSISTOR NPN BIPOLAR BC818-40... 25V 170MHz 330mW 500mA 250hFE MIN @ 100mA, MARKING CODE 6G,	PHILIPS	BC818-40
TR3	28435/241	TRANSISTOR PNP BIPOLAR BCX17... 45V 100MHz 425mW 500mA 100hFE MIN @ 100mA, MARKING CODE T1, SURFACE	PHILIPS	BCX17
TR4	28435/241	TRANSISTOR PNP BIPOLAR BCX17... 45V 100MHz 425mW 500mA 100hFE MIN @ 100mA, MARKING CODE T1, SURFACE	PHILIPS	BCX17

2nd & 3rd mixer A3

When ordering, prefix circuit reference with A3.

Cir. Ref.	MI part number	Description	Manufacturer	Manufacturer's part number
	44829-923	Complete unit	Issue 12	
C1	26878/402	CAPACITOR-VARIABLE PTFE 2pF to 15pF 200 ppm/DEG.C, VERTICAL-PCB MOUNT, 5mm DIA, 5mm PWP, 2 PIN, CODED	DAU COMPONENTS LTD	105-3901-015
C2	26343/430	CAPACITOR-FIXED CERAMIC 39pF +/-2% 63V N150 SINGLELAYER, RADIAL, 2.5mm PWP, (TAPED).	VISHAY COMPONENTS	ROP-390-GAK-ACR-J
C3	26343/489	CAPACITOR-FIXED CERAMIC 22pF +/-2% 63V N150 SINGLELAYER, RADIAL, 2.5mm PWP, (TAPED).	VISHAY COMPONENTS	ROP-220-GAK-ACR-J
C4	26386/871	CAPACITOR-FIXED CERAMIC 4.7nF +/-10% 50V X7R/2C1, MULTILAYER, SURFACE-MOUNTED, SIZE 0805, NICKEL	ROHM ELECTRONICS LTD	MCH21-5C-472-KP
C5	26386/871	CAPACITOR-FIXED CERAMIC 4.7nF +/-10% 50V X7R/2C1, MULTILAYER, SURFACE-MOUNTED, SIZE 0805, NICKEL	ROHM ELECTRONICS LTD	MCH21-5C-472-KP
C6	26343/499	CAPACITOR-FIXED CERAMIC 27pF +/-2% 63V N150 SINGLELAYER, RADIAL, 2.5mm PWP, (TAPED).	VISHAY COMPONENTS	ROP-270-GAK-ACR-J
C7 to C9	26386/871	CAPACITOR-FIXED CERAMIC 4.7nF +/-10% 50V X7R/2C1, MULTILAYER, SURFACE-MOUNTED, SIZE 0805, NICKEL	ROHM ELECTRONICS LTD	MCH21-5C-472-KP
C10	26343/494	CAPACITOR-FIXED CERAMIC 33pF +/-2% 63V N150 SINGLELAYER, RADIAL, 2.5mm PWP, (TAPED).	VISHAY COMPONENTS	ROP-330-GAK-ACR-J
C11 to C16	26386/871	CAPACITOR-FIXED CERAMIC 4.7nF +/-10% 50V X7R/2C1, MULTILAYER, SURFACE-MOUNTED, SIZE 0805, NICKEL	ROHM ELECTRONICS LTD	MCH21-5C-472-KP
C17	26386/813	CAPACITOR-FIXED CERAMIC 12pF +/-5% 50V NP0 MULTILAYER, SURFACE-MOUNTED, SIZE 0805, NICKEL	ROHM ELECTRONICS LTD	MCH21-5A-120-JP
C18 to C21	26386/871	CAPACITOR-FIXED CERAMIC 4.7nF +/-10% 50V X7R/2C1, MULTILAYER, SURFACE-MOUNTED, SIZE 0805, NICKEL	ROHM ELECTRONICS LTD	MCH21-5C-472-KP
C22	26386/819	CAPACITOR-FIXED CERAMIC 39pF +/-5% 50V NP0 MULTILAYER, SURFACE-MOUNTED, SIZE 0805, NICKEL	ROHM ELECTRONICS LTD	MCH21-5A-390-JP
C23	26386/881	CAPACITOR-FIXED CERAMIC 33nF +/-10% 50V X7R/2C1, MULTILAYER, SURFACE-MOUNTED, SIZE 1210, NICKEL	ROHM ELECTRONICS LTD	MCH32-5C-333-KP
C24 to C30	26386/871	CAPACITOR-FIXED CERAMIC 4.7nF +/-10% 50V X7R/2C1, MULTILAYER, SURFACE-MOUNTED, SIZE 0805, NICKEL	ROHM ELECTRONICS LTD	MCH21-5C-472-KP
C31	26386/881	CAPACITOR-FIXED CERAMIC 33nF +/-10% 50V X7R/2C1, MULTILAYER, SURFACE-MOUNTED, SIZE 1210, NICKEL	ROHM ELECTRONICS LTD	MCH32-5C-333-KP
C32	26451/004	CAPACITOR-FIXED ALUMINIUM 10uF +/-20% 35V ELECTROLYTIC, SURFACE-MOUNTED, SIZE 5.3 x 5.3mm,	RUBYCON CAPACITORS	35-REV-10
C35	26878/402	CAPACITOR-VARIABLE PTFE 2pF to 15pF 200 ppm/DEG.C, VERTICAL-PCB MOUNT, 5mm DIA, 5mm PWP, 2 PIN, CODED	DAU COMPONENTS LTD	105-3901-015
C36	26386/871	CAPACITOR-FIXED CERAMIC 4.7nF +/-10% 50V X7R/2C1, MULTILAYER, SURFACE-MOUNTED, SIZE 0805, NICKEL	ROHM ELECTRONICS LTD	MCH21-5C-472-KP
C37	26386/871	CAPACITOR-FIXED CERAMIC 4.7nF +/-10% 50V X7R/2C1, MULTILAYER, SURFACE-MOUNTED, SIZE 0805, NICKEL	ROHM ELECTRONICS LTD	MCH21-5C-472-KP
C38	26386/804	CAPACITOR-FIXED CERAMIC 2.2pF +/-0.5pF 50V NPO MULTILAYER, SURFACE-MOUNTED, SIZE 0805, NICKEL	ROHM ELECTRONICS LTD	MCH21-5A-2R2-DP
C39	26386/804	CAPACITOR-FIXED CERAMIC 2.2pF +/-0.5pF 50V NPO MULTILAYER, SURFACE-MOUNTED, SIZE 0805, NICKEL	ROHM ELECTRONICS LTD	MCH21-5A-2R2-DP
C45	26343/432	CAPACITOR-FIXED CERAMIC 150pF +/-2% 63V N150 SINGLELAYER, RADIAL, 2.5mm PWP, (TAPED).	VISHAY COMPONENTS	RPO-151-GAK-ACR-J
C46	26343/438	CAPACITOR-FIXED CERAMIC 120pF +/-2% 63V N150 SINGLELAYER, RADIAL, 2.5mm PWP, (TAPED).	VISHAY COMPONENTS	ROP-121-GAK-ACR-J

Cir. Ref.	MI part number	Description	Manufacturer	Manufacturer's part number
2nd & 3rd mixer A3 (contd.)				
C47	26343/446	CAPACITOR-FIXED CERAMIC 180pF +/-2% 63V N750 SINGLELAYER, RADIAL, 2.5mm PWP, (TAPED).	VISHAY COMPONENTS	ROU-181-GAK-ACR-J
C48	26343/446	CAPACITOR-FIXED CERAMIC 180pF +/-2% 63V N750 SINGLELAYER, RADIAL, 2.5mm PWP, (TAPED).	VISHAY COMPONENTS	ROU-181-GAK-ACR-J
C55	26451/003	CAPACITOR-FIXED ALUMINIUM 10uF +/-20% 16V ELECTROLYTIC, SURFACE-MOUNTED, SIZE 4.3 x 4.3mm,	PANASONIC INDUSTRIAL	ECE-V-1CA-100R
C56 to C60	26386/871	CAPACITOR-FIXED CERAMIC 4.7nF +/-10% 50V X7R/2C1, MULTILAYER, SURFACE-MOUNTED, SIZE 0805, NICKEL	ROHM ELECTRONICS LTD	MCH21-5C-472-KP
D2	28371/768	DIODE ZENER, BZX84-C9V1... 350mW 9.1V 5% 250mA MARKING CODE Z8, SURFACE MOUNTED, SOT-23, (8mm	PHILIPS	BZX84-C9V1
D3 to D5	28335/670	DIODE BAND SWITCHING, BAT18... 35V 100mA 1pF MAX @ 20V, 1.2Vf @ 100mA, MARKING CODE A2, SURFACE	PHILIPS	BAT18/T1
IC1	28531/027	RF-MIXER DOUBLE-BALANCED, DIODE RING, SCM-2500... 0.5-2.5GHz, 50R 1 dBm RF-1dB COMPRESS, 6 dB LOSS,	MINI-CIRCUITS	SCM-2500NL
IC2	28531/021	RF-MIXER DOUBLE-BALANCED, SL6440C... 150MHz MAX, 15 dBm RF-1dB COMPRESS, +30dBM INTERCEPT,		
IC3	28461/342	IC-ANALOGUE OPERATIONAL AMP LM358... DUAL, 32V 1MHz BANDWIDTH, INPUT VOLTAGE RANGE 0 TO Vcc-1.5V,	PHILIPS	LM358N
FL1	23642/953	FILTER BANDPASS, PCB-MOUNT, CERAMIC, 1355MHz 300MHz BANDWIDTH @ 3dB, 50 OHM, 4 POLE.	SIEMENS LTD	B69824-L1357-A630
L2 to L4	23642/970	INDUCTOR-VARIABLE 0.05uH NOM, UNSCREENED, 2 PIN, 8.2mm SQUARE PCB MOUNT BASE, Q>120 @ 100MHz,	TOKO (UK) LTD	E525HNS-100002
L5	23642/519	INDUCTOR-FIXED 0.068uH +/- 5% EPOXY-MOULD, 450mA 0R36 MAX, 27 Q @ 100 MHz, 1K MHz SRF, SURFACE	MEGGITT ELECTRONICS	3612-T-068-J
L6	23642/519	INDUCTOR-FIXED 0.068uH +/- 5% EPOXY-MOULD, 450mA 0R36 MAX, 27 Q @ 100 MHz, 1K MHz SRF, SURFACE	MEGGITT ELECTRONICS	3612-T-068-J
L7	23642/533	INDUCTOR-FIXED 10uH +/- 5% EPOXY-MOULD, 150mA 2R1 MAX, 30 Q @ 2.52 MHz, 36 MHz SRF, SURFACE MOUNTED,	MEGGITT ELECTRONICS	3612-T-100-J
L8	23642/537	INDUCTOR-FIXED 4.7uH +/- 5% EPOXY-MOULD, 220mA 1R5 MAX, 30 Q @ 7.96 MHz, 50 MHz SRF, SURFACE MOUNTED,	MEGGITT ELECTRONICS	3612-T-4R7-J
L9	23642/716	INDUCTOR-FIXED 3.3uH +/- 5% EPOXY-MOULD, 260mA 1R2 MAX, 30 Q @ 7.96 MHz, 60 MHz SRF, SURFACE MOUNTED,	MEGGITT ELECTRONICS	3612-T-3R3-J
L14	23642/537	INDUCTOR-FIXED 4.7uH +/- 5% EPOXY-MOULD, 220mA 1R5 MAX, 30 Q @ 7.96 MHz, 50 MHz SRF, SURFACE MOUNTED,	MEGGITT ELECTRONICS	3612-T-4R7-J
R2	24811/180	RESISTOR-FIXED METAL-FILM 2K +/- 1% 250mW 200V 50 ppm/DEG.C, SURFACE MOUNTED, SIZE MINI-MELF, (8mm	VISHAY COMPONENTS	SMM0204-2K0-1%50ppm
R3	24811/180	RESISTOR-FIXED METAL-FILM 2K +/- 1% 250mW 200V 50 ppm/DEG.C, SURFACE MOUNTED, SIZE MINI-MELF, (8mm	VISHAY COMPONENTS	SMM0204-2K0-1%50ppm
R4	24811/142	RESISTOR-FIXED METAL-FILM 51R1 +/- 1% 250mW 200V 50 ppm/DEG.C, SURFACE MOUNTED, SIZE MINI-MELF,	VISHAY COMPONENTS	SMM0204-51R1-1%50ppm

Cir. Ref.	MI part number	Description	Manufacturer	Manufacturer's part number
2nd & 3rd mixer		**A3 (contd.)**		
R5	24811/127	RESISTOR-FIXED METAL-FILM 12R1 +/- 1% 250mW 200V 50 ppm/DEG.C, SURFACE MOUNTED, SIZE MINI-MELF,	VISHAY COMPONENTS	SMM0204-12R1-1%50ppm
R6	24811/171	RESISTOR-FIXED METAL-FILM 825R +/- 1% 250mW 200V 50 ppm/DEG.C, SURFACE MOUNTED, SIZE MINI-MELF,	VISHAY COMPONENTS	SMM0204-825R-1%50ppm
R7	24811/146	RESISTOR-FIXED METAL-FILM 75R +/- 1% 250mW 200V 50 ppm/DEG.C, SURFACE MOUNTED, SIZE MINI-MELF, (8mm	VISHAY COMPONENTS	SMM0204-75R0-1%50ppm
R8	24811/195	RESISTOR-FIXED METAL-FILM 8K25 +/- 1% 250mW 200V 50 ppm/DEG.C, SURFACE MOUNTED, SIZE MINI-MELF,	VISHAY COMPONENTS	SMM0204-8K25-1%50ppm
R9	24811/185	RESISTOR-FIXED METAL-FILM 3K32 +/- 1% 250mW 200V 50 ppm/DEG.C, SURFACE MOUNTED, SIZE MINI-MELF,	VISHAY COMPONENTS	SMM0204-3K32-1%50ppm
R10	24811/189	RESISTOR-FIXED METAL-FILM 4K75 +/- 1% 250mW 200V 50 ppm/DEG.C, SURFACE MOUNTED, SIZE MINI-MELF,	VISHAY COMPONENTS	SMM0204-4K75-1%50ppm
R11	24811/142	RESISTOR-FIXED METAL-FILM 51R1 +/- 1% 250mW 200V 50 ppm/DEG.C, SURFACE MOUNTED, SIZE MINI-MELF,	VISHAY COMPONENTS	SMM0204-51R1-1%50ppm
R12	24811/171	RESISTOR-FIXED METAL-FILM 825R +/- 1% 250mW 200V 50 ppm/DEG.C, SURFACE MOUNTED, SIZE MINI-MELF,	VISHAY COMPONENTS	SMM0204-825R-1%50ppm
R13	24811/146	RESISTOR-FIXED METAL-FILM 75R +/- 1% 250mW 200V 50 ppm/DEG.C, SURFACE MOUNTED, SIZE MINI-MELF, (8mm	VISHAY COMPONENTS	SMM0204-75R0-1%50ppm
R14	24811/127	RESISTOR-FIXED METAL-FILM 12R1 +/- 1% 250mW 200V 50 ppm/DEG.C, SURFACE MOUNTED, SIZE MINI-MELF,	VISHAY COMPONENTS	SMM0204-12R1-1%50ppm
R15	24811/172	RESISTOR-FIXED METAL-FILM 909R +/- 1% 250mW 200V 50 ppm/DEG.C, SURFACE MOUNTED, SIZE MINI-MELF,	VISHAY COMPONENTS	SMM0204-909R-1%50ppm
R16	24811/160	RESISTOR-FIXED METAL-FILM 301R +/- 1% 250mW 200V 50 ppm/DEG.C, SURFACE MOUNTED, SIZE MINI-MELF,	VISHAY COMPONENTS	SMM0204-301R-1%50ppm
R17	24811/167	RESISTOR-FIXED METAL-FILM 562R +/- 1% 250mW 200V 50 ppm/DEG.C, SURFACE MOUNTED, SIZE MINI-MELF,	VISHAY COMPONENTS	SMM0204-562R-1%50ppm
R18	24811/127	RESISTOR-FIXED METAL-FILM 12R1 +/- 1% 250mW 200V 50 ppm/DEG.C, SURFACE MOUNTED, SIZE MINI-MELF,	VISHAY COMPONENTS	SMM0204-12R1-1%50ppm
R19	24811/171	RESISTOR-FIXED METAL-FILM 825R +/- 1% 250mW 200V 50 ppm/DEG.C, SURFACE MOUNTED, SIZE MINI-MELF,	VISHAY COMPONENTS	SMM0204-825R-1%50ppm
R20	24811/180	RESISTOR-FIXED METAL-FILM 2K +/- 1% 250mW 200V 50 ppm/DEG.C, SURFACE MOUNTED, SIZE MINI-MELF, (8mm	VISHAY COMPONENTS	SMM0204-2K0-1%50ppm
R21	24811/173	RESISTOR-FIXED METAL-FILM 1K +/- 1% 250mW 200V 50 ppm/DEG.C, SURFACE MOUNTED, SIZE MINI-MELF, (8mm	VISHAY COMPONENTS	SMM0204-1K0-1%-50ppm
R22	24811/180	RESISTOR-FIXED METAL-FILM 2K +/- 1% 250mW 200V 50 ppm/DEG.C, SURFACE MOUNTED, SIZE MINI-MELF, (8mm	VISHAY COMPONENTS	SMM0204-2K0-1%50ppm
R23	24811/127	RESISTOR-FIXED METAL-FILM 12R1 +/- 1% 250mW 200V 50 ppm/DEG.C, SURFACE MOUNTED, SIZE MINI-MELF,	VISHAY COMPONENTS	SMM0204-12R1-1%50ppm
R24	24811/195	RESISTOR-FIXED METAL-FILM 8K25 +/- 1% 250mW 200V 50 ppm/DEG.C, SURFACE MOUNTED, SIZE MINI-MELF,	VISHAY COMPONENTS	SMM0204-8K25-1%50ppm
R25	24811/185	RESISTOR-FIXED METAL-FILM 3K32 +/- 1% 250mW 200V 50 ppm/DEG.C, SURFACE MOUNTED, SIZE MINI-MELF,	VISHAY COMPONENTS	SMM0204-3K32-1%50ppm
R26	24811/189	RESISTOR-FIXED METAL-FILM 4K75 +/- 1% 250mW 200V 50 ppm/DEG.C, SURFACE MOUNTED, SIZE MINI-MELF,	VISHAY COMPONENTS	SMM0204-4K75-1%50ppm
R27	24811/142	RESISTOR-FIXED METAL-FILM 51R1 +/- 1% 250mW 200V 50 ppm/DEG.C, SURFACE MOUNTED, SIZE MINI-MELF,	VISHAY COMPONENTS	SMM0204-51R1-1%50ppm
R28	24811/171	RESISTOR-FIXED METAL-FILM 825R +/- 1% 250mW 200V 50 ppm/DEG.C, SURFACE MOUNTED, SIZE MINI-MELF,	VISHAY COMPONENTS	SMM0204-825R-1%50ppm
R29	24811/155	RESISTOR-FIXED METAL-FILM 182R +/- 1% 250mW 200V 50 ppm/DEG.C, SURFACE MOUNTED, SIZE MINI-MELF,	VISHAY COMPONENTS	SMM0204-182R-1%50ppm
R30	24811/197	RESISTOR-FIXED METAL-FILM 10K +/- 1% 250mW 200V 50 ppm/DEG.C, SURFACE MOUNTED, SIZE MINI-MELF, (8mm	VISHAY COMPONENTS	SMM0204-10K-1%50ppm

Clr. Ref.	MI part number	Description	Manufacturer	Manufacturer's part number
2nd & 3rd mixer A3 (contd.)				
R31	24811/171	RESISTOR-FIXED METAL-FILM 825R +/- 1% 250mW 200V 50 ppm/DEG.C, SURFACE MOUNTED, SIZE MINI-MELF,	VISHAY COMPONENTS	SMM0204-825R-1%50ppm
R34	24811/144	RESISTOR-FIXED METAL-FILM 61R9 +/- 1% 250mW 200V 50 ppm/DEG.C, SURFACE MOUNTED, SIZE MINI-MELF,	VISHAY COMPONENTS	SMM0204-61R9-1%50ppm
R35	24811/142	RESISTOR-FIXED METAL-FILM 51R1 +/- 1% 250mW 200V 50 ppm/DEG.C, SURFACE MOUNTED, SIZE MINI-MELF,	VISHAY COMPONENTS	SMM0204-51R1-1%50ppm
R36	24811/203	RESISTOR-FIXED METAL-FILM 18K2 +/- 1% 250mW 200V 50 ppm/DEG.C, SURFACE MOUNTED, SIZE MINI-MELF,	VISHAY COMPONENTS	SMM0204-18K2-1%50ppm
R37	24811/163	RESISTOR-FIXED METAL-FILM 392R +/- 1% 250mW 200V 50 ppm/DEG.C, SURFACE MOUNTED, SIZE MINI-MELF,	VISHAY COMPONENTS	SMM0204-392R-1%50ppm
R38	24811/163	RESISTOR-FIXED METAL-FILM 392R +/- 1% 250mW 200V 50 ppm/DEG.C, SURFACE MOUNTED, SIZE MINI-MELF,	VISHAY COMPONENTS	SMM0204-392R-1%50ppm
R42	24811/173	RESISTOR-FIXED METAL-FILM 1K +/- 1% 250mW 200V 50 ppm/DEG.C, SURFACE MOUNTED, SIZE MINI-MELF, (8mm	VISHAY COMPONENTS	SMM0204-1K0-1%-50ppm
R43	24811/166	RESISTOR-FIXED METAL-FILM 511R +/- 1% 250mW 200V 50 ppm/DEG.C, SURFACE MOUNTED, SIZE MINI-MELF,	VISHAY COMPONENTS	SMM0204-511R-1%50ppm
R44	24811/142	RESISTOR-FIXED METAL-FILM 51R1 +/- 1% 250mW 200V 50 ppm/DEG.C, SURFACE MOUNTED, SIZE MINI-MELF,	VISHAY COMPONENTS	SMM0204-51R1-1%50ppm
R45	24811/142	RESISTOR-FIXED METAL-FILM 51R1 +/- 1% 250mW 200V 50 ppm/DEG.C, SURFACE MOUNTED, SIZE MINI-MELF,	VISHAY COMPONENTS	SMM0204-51R1-1%50ppm
R46	24811/219	RESISTOR-FIXED METAL-FILM 82K5 +/- 1% 250mW 200V 50 ppm/DEG.C, SURFACE MOUNTED, SIZE MINI-MELF,	VISHAY COMPONENTS	SMM0204-82K5-1%50ppm
R47	24811/211	RESISTOR-FIXED METAL-FILM 39K2 +/- 1% 250mW 200V 50 ppm/DEG.C, SURFACE MOUNTED, SIZE MINI-MELF,	VISHAY COMPONENTS	SMM0204-39K2-1%50ppm
R48 to R50	24811/203	RESISTOR-FIXED METAL-FILM 18K2 +/- 1% 250mW 200V 50 ppm/DEG.C, SURFACE MOUNTED, SIZE MINI-MELF,	VISHAY COMPONENTS	SMM0204-18K2-1%50ppm
TR6	28457/851	TRANSISTOR NPN BIPOLAR BFS17... 15V 1.3GHz 250mW 50mA	PHILIPS	BFS17
TR7	28457/851	TRANSISTOR NPN BIPOLAR BFS17... 15V 1.3GHz 250mW 50mA 20hFE MIN @ 2mA, MARKING CODE E1, SURFACE	PHILIPS	BFS17

Cir. Ref.	MI part number	Description	Manufacturer	Manufacturer's part number

10.7 MHz IF & Log Amp A4/1

When ordering, prefix circuit reference with A4/1.

	44830-103	Complete unit	Issue 1	
C2 to C5	26386/871	CAPACITOR-FIXED CERAMIC 4.7nF +/-10% 50V X7R/2C1, MULTILAYER, SURFACE-MOUNTED, SIZE 0805, NICKEL	ROHM ELECTRONICS LTD	MCH21-5C-472-KP
C9	26343/784	CAPACITOR-FIXED CERAMIC 68pF +/-5% 50V NPO MULTILAYER, SURFACE-MOUNTED, SIZE 0805, NICKEL	ROHM ELECTRONICS LTD	MCH21-5A-680-JP
C10 to C14	26386/871	CAPACITOR-FIXED CERAMIC 4.7nF +/-10% 50V X7R/2C1, MULTILAYER, SURFACE-MOUNTED, SIZE 0805, NICKEL	ROHM ELECTRONICS LTD	MCH21-5C-472-KP
C15	26386/777	CAPACITOR-FIXED CERAMIC 47nF +/-20% 63V X7R/2C1, MULTILAYER, SURFACE-MOUNTED, SIZE 1206, NICKEL	PHILIPS	1206-2R-473-K9-BBC
C16	26386/814	CAPACITOR-FIXED CERAMIC 15pF +/-5% 50V NP0 MULTILAYER, SURFACE-MOUNTED, SIZE 0805, NICKEL	ROHM ELECTRONICS LTD	MCH21-5A-150-JP
C17	26878/402	CAPACITOR-VARIABLE PTFE 2pF to 15pF 200 ppm/DEG.C, VERTICAL-PCB MOUNT, 5mm DIA, 5mm PWP, 2 PIN, CODED	DAU COMPONENTS LTD	105-3901-015
C18	26386/871	CAPACITOR-FIXED CERAMIC 4.7nF +/-10% 50V X7R/2C1, MULTILAYER, SURFACE-MOUNTED, SIZE 0805, NICKEL	ROHM ELECTRONICS LTD	MCH21-5C-472-KP
C19	26386/871	CAPACITOR-FIXED CERAMIC 4.7nF +/-10% 50V X7R/2C1, MULTILAYER, SURFACE-MOUNTED, SIZE 0805, NICKEL	ROHM ELECTRONICS LTD	MCH21-5C-472-KP
C20	26386/803	CAPACITOR-FIXED CERAMIC 1.8pF +/-0.5pF 50V NP0 MULTILAYER, SURFACE-MOUNTED, SIZE 0805, NICKEL	ROHM ELECTRONICS LTD	MCH21-5A-1R8-DP
C21	26878/402	CAPACITOR-VARIABLE PTFE 2pF to 15pF 200 ppm/DEG.C, VERTICAL-PCB MOUNT, 5mm DIA, 5mm PWP, 2 PIN, CODED	DAU COMPONENTS LTD	105-3901-015
C22 to C25	26386/871	CAPACITOR-FIXED CERAMIC 4.7nF +/-10% 50V X7R/2C1, MULTILAYER, SURFACE-MOUNTED, SIZE 0805, NICKEL	ROHM ELECTRONICS LTD	MCH21-5C-472-KP
C26	26386/814	CAPACITOR-FIXED CERAMIC 15pF +/-5% 50V NP0 MULTILAYER, SURFACE-MOUNTED, SIZE 0805, NICKEL	ROHM ELECTRONICS LTD	MCH21-5A-150-JP
C27	26878/402	CAPACITOR-VARIABLE PTFE 2pF to 15pF 200 ppm/DEG.C, VERTICAL-PCB MOUNT, 5mm DIA, 5mm PWP, 2 PIN, CODED	DAU COMPONENTS LTD	105-3901-015
C28	26386/871	CAPACITOR-FIXED CERAMIC 4.7nF +/-10% 50V X7R/2C1, MULTILAYER, SURFACE-MOUNTED, SIZE 0805, NICKEL	ROHM ELECTRONICS LTD	MCH21-5C-472-KP
C29	26386/871	CAPACITOR-FIXED CERAMIC 4.7nF +/-10% 50V X7R/2C1, MULTILAYER, SURFACE-MOUNTED, SIZE 0805, NICKEL	ROHM ELECTRONICS LTD	MCH21-5C-472-KP
C30	26386/803	CAPACITOR-FIXED CERAMIC 1.8pF +/-0.5pF 50V NP0 MULTILAYER, SURFACE-MOUNTED, SIZE 0805, NICKEL	ROHM ELECTRONICS LTD	MCH21-5A-1R8-DP
C31	26878/402	CAPACITOR-VARIABLE PTFE 2pF to 15pF 200 ppm/DEG.C, VERTICAL-PCB MOUNT, 5mm DIA, 5mm PWP, 2 PIN, CODED	DAU COMPONENTS LTD	105-3901-015
C32 to C43	26386/871	CAPACITOR-FIXED CERAMIC 4.7nF +/-10% 50V X7R/2C1, MULTILAYER, SURFACE-MOUNTED, SIZE 0805, NICKEL	ROHM ELECTRONICS LTD	MCH21-5C-472-KP
C44	26386/814	CAPACITOR-FIXED CERAMIC 15pF +/-5% 50V NP0 MULTILAYER, SURFACE-MOUNTED, SIZE 0805, NICKEL	ROHM ELECTRONICS LTD	MCH21-5A-150-JP
C45	26878/402	CAPACITOR-VARIABLE PTFE 2pF to 15pF 200 ppm/DEG.C, VERTICAL-PCB MOUNT, 5mm DIA, 5mm PWP, 2 PIN, CODED	DAU COMPONENTS LTD	105-3901-015
C46	26386/871	CAPACITOR-FIXED CERAMIC 4.7nF +/-10% 50V X7R/2C1, MULTILAYER, SURFACE-MOUNTED, SIZE 0805, NICKEL	ROHM ELECTRONICS LTD	MCH21-5C-472-KP
C47	26386/871	CAPACITOR-FIXED CERAMIC 4.7nF +/-10% 50V X7R/2C1, MULTILAYER, SURFACE-MOUNTED, SIZE 0805, NICKEL	ROHM ELECTRONICS LTD	MCH21-5C-472-KP
C48	26386/803	CAPACITOR-FIXED CERAMIC 1.8pF +/-0.5pF 50V NP0 MULTILAYER, SURFACE-MOUNTED, SIZE 0805, NICKEL	ROHM ELECTRONICS LTD	MCH21-5A-1R8-DP

Cir. Ref.	MI part number	Description	Manufacturer	Manufacturer's part number
10.7 MHz IF & Log Amp A4/1 (contd.)				
C49	26878/402	CAPACITOR-VARIABLE PTFE 2pF to 15pF 200 ppm/DEG.C, VERTICAL-PCB MOUNT, 5mm DIA, 5mm PWP, 2 PIN, CODED	DAU COMPONENTS LTD	105-3901-015
C50 to C53	26386/871	CAPACITOR-FIXED CERAMIC 4.7nF +/-10% 50V X7R/2C1, MULTILAYER, SURFACE-MOUNTED, SIZE 0805, NICKEL	ROHM ELECTRONICS LTD	MCH21-5C-472-KP
C54	26386/814	CAPACITOR-FIXED CERAMIC 15pF +/-5% 50V NP0 MULTILAYER, SURFACE-MOUNTED, SIZE 0805, NICKEL	ROHM ELECTRONICS LTD	MCH21-5A-150-JP
C55	26878/402	CAPACITOR-VARIABLE PTFE 2pF to 15pF 200 ppm/DEG.C, VERTICAL-PCB MOUNT, 5mm DIA, 5mm PWP, 2 PIN, CODED	DAU COMPONENTS LTD	105-3901-015
C56	26386/871	CAPACITOR-FIXED CERAMIC 4.7nF +/-10% 50V X7R/2C1, MULTILAYER, SURFACE-MOUNTED, SIZE 0805, NICKEL	ROHM ELECTRONICS LTD	MCH21-5C-472-KP
C57	26386/871	CAPACITOR-FIXED CERAMIC 4.7nF +/-10% 50V X7R/2C1, MULTILAYER, SURFACE-MOUNTED, SIZE 0805, NICKEL	ROHM ELECTRONICS LTD	MCH21-5C-472-KP
C58	26386/803	CAPACITOR-FIXED CERAMIC 1.8pF +/-0.5pF 50V NP0 MULTILAYER, SURFACE-MOUNTED, SIZE 0805, NICKEL	ROHM ELECTRONICS LTD	MCH21-5A-1R8-DP
C59	26878/402	CAPACITOR-VARIABLE PTFE 2pF to 15pF 200 ppm/DEG.C, VERTICAL-PCB MOUNT, 5mm DIA, 5mm PWP, 2 PIN, CODED	DAU COMPONENTS LTD	105-3901-015
C60 to C63	26386/871	CAPACITOR-FIXED CERAMIC 4.7nF +/-10% 50V X7R/2C1, MULTILAYER, SURFACE-MOUNTED, SIZE 0805, NICKEL	ROHM ELECTRONICS LTD	MCH21-5C-472-KP
C64	26386/875	CAPACITOR-FIXED CERAMIC 10nF +/-10% 50V X7R/2C1, MULTILAYER, SURFACE-MOUNTED, SIZE 0805, NICKEL	ROHM ELECTRONICS LTD	MCH21-5C-103-KP
C65 to C80	26386/871	CAPACITOR-FIXED CERAMIC 4.7nF +/-10% 50V X7R/2C1, MULTILAYER, SURFACE-MOUNTED, SIZE 0805, NICKEL	ROHM ELECTRONICS LTD	MCH21-5C-472-KP
C81	26386/899	CAPACITOR-FIXED CERAMIC 100nF +/-10% 50V X7R/2C1, MULTILAYER, SURFACE-MOUNTED, SIZE 1206, NICKEL	ROHM ELECTRONICS LTD	MCH31-5C-104-KP
C82	26451/002	CAPACITOR-FIXED ALUMINIUM 4.7uF +/-20% 35V ELECTROLYTIC, SURFACE-MOUNTED, SIZE 4.3 x 4.3mm,	PANASONIC INDUSTRIAL	ECE-V-1VA-4R7R
C83	26386/899	CAPACITOR-FIXED CERAMIC 100nF +/-10% 50V X7R/2C1, MULTILAYER, SURFACE-MOUNTED, SIZE 1206, NICKEL	ROHM ELECTRONICS LTD	MCH31-5C-104-KP
C84	26451/002	CAPACITOR-FIXED ALUMINIUM 4.7uF +/-20% 35V ELECTROLYTIC, SURFACE-MOUNTED, SIZE 4.3 x 4.3mm,	PANASONIC INDUSTRIAL	ECE-V-1VA-4R7R
C85	26386/871	CAPACITOR-FIXED CERAMIC 4.7nF +/-10% 50V X7R/2C1, MULTILAYER, SURFACE-MOUNTED, SIZE 0805, NICKEL	ROHM ELECTRONICS LTD	MCH21-5C-472-KP
C86	26386/871	CAPACITOR-FIXED CERAMIC 4.7nF +/-10% 50V X7R/2C1, MULTILAYER, SURFACE-MOUNTED, SIZE 0805, NICKEL	ROHM ELECTRONICS LTD	MCH21-5C-472-KP
C100	26386/875	CAPACITOR-FIXED CERAMIC 10nF +/-10% 50V X7R/2C1, MULTILAYER, SURFACE-MOUNTED, SIZE 0805, NICKEL	ROHM ELECTRONICS LTD	MCH21-5C-103-KP
C101	26878/407	CAPACITOR-VARIABLE POLYPROPYLENE 2pF to 22pF 100V VERTICAL-PCB MOUNT, 7.5mm DIA, 10mm LONG, 3 PIN,	PHILIPS	2222-808-11229
C102	26386/824	CAPACITOR-FIXED CERAMIC 100pF +/-5% 50V NP0 MULTILAYER, SURFACE-MOUNTED, SIZE 0805, NICKEL	ROHM ELECTRONICS LTD	MCH21-5A-101-JP
C103	26386/875	CAPACITOR-FIXED CERAMIC 10nF +/-10% 50V X7R/2C1, MULTILAYER, SURFACE-MOUNTED, SIZE 0805, NICKEL	ROHM ELECTRONICS LTD	MCH21-5C-103-KP
C104	26386/824	CAPACITOR-FIXED CERAMIC 100pF +/-5% 50V NP0 MULTILAYER, SURFACE-MOUNTED, SIZE 0805, NICKEL	ROHM ELECTRONICS LTD	MCH21-5A-101-JP
C109	26386/899	CAPACITOR-FIXED CERAMIC 100nF +/-10% 50V X7R/2C1, MULTILAYER, SURFACE-MOUNTED, SIZE 1206, NICKEL	ROHM ELECTRONICS LTD	MCH31-5C-104-KP
C112 to C114	26451/002	CAPACITOR-FIXED ALUMINIUM 4.7uF +/-20% 35V ELECTROLYTIC, SURFACE-MOUNTED, SIZE 4.3 x 4.3mm,	PANASONIC INDUSTRIAL	ECE-V-1VA-4R7R
C125 to C127	26386/871	CAPACITOR-FIXED CERAMIC 4.7nF +/-10% 50V X7R/2C1, MULTILAYER, SURFACE-MOUNTED, SIZE 0805, NICKEL	ROHM ELECTRONICS LTD	MCH21-5C-472-KP
C128	26386/817	CAPACITOR-FIXED CERAMIC 27pF +/-5% 50V NP0 MULTILAYER, SURFACE-MOUNTED, SIZE 0805, NICKEL	ROHM ELECTRONICS LTD	MCH21-5A-270-JP

Cir. Ref.	MI part number	Description	Manufacturer	Manufacturer's part number
10.7 MHz IF & Log Amp A4/1 (contd.)				
C129	26386/804	CAPACITOR-FIXED CERAMIC 2.2pF +/-0.5pF 50V NPO MULTILAYER, SURFACE-MOUNTED, SIZE 0805, NICKEL	ROHM ELECTRONICS LTD	MCH21-5A-2R2-DP
C130	26386/871	CAPACITOR-FIXED CERAMIC 4.7nF +/-10% 50V X7R/2C1, MULTILAYER, SURFACE-MOUNTED, SIZE 0805, NICKEL	ROHM ELECTRONICS LTD	MCH21-5C-472-KP
C140 to C142	26386/875	CAPACITOR-FIXED CERAMIC 10nF +/-10% 50V X7R/2C1, MULTILAYER, SURFACE-MOUNTED, SIZE 0805, NICKEL	ROHM ELECTRONICS LTD	MCH21-5C-103-KP
C143	26386/871	CAPACITOR-FIXED CERAMIC 4.7nF +/-10% 50V X7R/2C1, MULTILAYER, SURFACE-MOUNTED, SIZE 0805, NICKEL	ROHM ELECTRONICS LTD	MCH21-5C-472-KP
C145	26386/875	CAPACITOR-FIXED CERAMIC 10nF +/-10% 50V X7R/2C1, MULTILAYER, SURFACE-MOUNTED, SIZE 0805, NICKEL	ROHM ELECTRONICS LTD	MCH21-5C-103-KP
C146	26386/871	CAPACITOR-FIXED CERAMIC 4.7nF +/-10% 50V X7R/2C1, MULTILAYER, SURFACE-MOUNTED, SIZE 0805, NICKEL	ROHM ELECTRONICS LTD	MCH21-5C-472-KP
C147	26386/875	CAPACITOR-FIXED CERAMIC 10nF +/-10% 50V X7R/2C1, MULTILAYER, SURFACE-MOUNTED, SIZE 0805, NICKEL	ROHM ELECTRONICS LTD	MCH21-5C-103-KP
C148	26386/875	CAPACITOR-FIXED CERAMIC 10nF +/-10% 50V X7R/2C1, MULTILAYER, SURFACE-MOUNTED, SIZE 0805, NICKEL	ROHM ELECTRONICS LTD	MCH21-5C-103-KP
C149	26386/871	CAPACITOR-FIXED CERAMIC 4.7nF +/-10% 50V X7R/2C1, MULTILAYER, SURFACE-MOUNTED, SIZE 0805, NICKEL	ROHM ELECTRONICS LTD	MCH21-5C-472-KP
C150	26386/871	CAPACITOR-FIXED CERAMIC 4.7nF +/-10% 50V X7R/2C1, MULTILAYER, SURFACE-MOUNTED, SIZE 0805, NICKEL	ROHM ELECTRONICS LTD	MCH21-5C-472-KP
C152	26386/875	CAPACITOR-FIXED CERAMIC 10nF +/-10% 50V X7R/2C1, MULTILAYER, SURFACE-MOUNTED, SIZE 0805, NICKEL	ROHM ELECTRONICS LTD	MCH21-5C-103-KP
C153	26386/875	CAPACITOR-FIXED CERAMIC 10nF +/-10% 50V X7R/2C1, MULTILAYER, SURFACE-MOUNTED, SIZE 0805, NICKEL	ROHM ELECTRONICS LTD	MCH21-5C-103-KP
C155	26421/127	CAPACITOR-FIXED ALUMINIUM 470uF +/-20% 16V ELECTROLYTIC, RADIAL, 5mm PWP, (LOOSE OR TAPED).	PHILIPS	2222-037-50471
C156	26421/127	CAPACITOR-FIXED ALUMINIUM 470uF +/-20% 16V ELECTROLYTIC, RADIAL, 5mm PWP, (LOOSE OR TAPED).	PHILIPS	2222-037-50471
C160	26386/871	CAPACITOR-FIXED CERAMIC 4.7nF +/-10% 50V X7R/2C1, MULTILAYER, SURFACE-MOUNTED, SIZE 0805, NICKEL	ROHM ELECTRONICS LTD	MCH21-5C-472-KP
D1 to D16	28335/670	DIODE BAND SWITCHING, BAT18... 35V 100mA 1pF MAX @ 20V, 1.2Vf @ 100mA, MARKING CODE A2, SURFACE	PHILIPS	BAT18/T1
D17	28371/301	DIODE ZENER, BZX84-C4V3... 350mW 4.3V 5% 250mA MARKING CODE Z17/W9, SURFACE MOUNTED, SOT-23, (8mm	PHILIPS	BZX84-C4V3
D18	28383/910	DIODE SMALL-SIGNAL, BAS28... DUAL, 330mW 75V 250mA ELECTRICALLY ISOLATED, MARKING CODE A61 OR JT,	PHILIPS	BAS28
D19	28383/910	DIODE SMALL-SIGNAL, BAS28... DUAL, 330mW 75V 250mA ELECTRICALLY ISOLATED, MARKING CODE A61 OR JT,	PHILIPS	BAS28
D20	28371/494	DIODE VOLTAGE REFERENCE, 1N825... 250mW 6.2V 5% 50mA 20ppm/DEG.C, AXIAL, DO-7, (TAPED).	PHILIPS	1N825
D21	28371/494	DIODE VOLTAGE REFERENCE, 1N825... 250mW 6.2V 5% 50mA 20ppm/DEG.C, AXIAL, DO-7, (TAPED).	PHILIPS	1N825
IC1	28461/843	IC-ANALOGUE SWITCH SD5400... QUAD, 20V BIDIRECTIONAL, SPST, HIGH ISOLATION @ 10MHz, DMOS,	TEMIC UK LTD	SD5400CY
IC2	28461/388	IC-ANALOGUE OPERATIONAL AMP LM324D... QUAD, GEN-PURPOSE, SLEW RATE 0.2V/uS MIN, GAIN BANDWIDTH	PHILIPS	LM324D
IC3	28461/412	IC-ANALOGUE OPERATIONAL AMP TL072... DUAL, 18V UNITY GAIN BNDWDTH 3MHz, OFFSET VOLTAGE 10mV, SLEW	MOTOROLA INC.	TL072CD

Cir. Ref.	MI part number	Description	Manufacturer	Manufacturer's part number
10.7 MHz IF & Log Amp A4/1 (contd.)				
IC4	28461/522	IC-ANALOGUE LIMITING-AMPLIFIER AD606... 5V 20mA 9-STAGE, LOG AMP FREQ 50MHz MAX, LIMITER OUTPUT	ANALOG DEVICES LTD	AD606JR
IC5	28461/412	IC-ANALOGUE OPERATIONAL AMP TL072... DUAL, 18V UNITY GAIN BNDWDTH 3MHz, OFFSET VOLTAGE 10mV, SLEW	MOTOROLA INC.	TL072CD
IC6	28461/882	IC-ANALOGUE OPERATIONAL AMP EL2030... SINGLE, 18V CURRENT FEEDBACK, UNITY GAIN BANDWIDTH 120MHz,	ELANTEC INC	EL2030CN
IC7	28461/734	IC-ANALOGUE VOLTAGE-REGULATOR 78L05AC... 5V 100mA POSITIVE, LINEAR, 5% REGULATION, MONOLITHIC, 3	NAT. SEMICONDUCTOR	LM78L05ACZ
L2	23642/510	INDUCTOR-FIXED 0.1uH +/- 5% EPOXY-MOULD, 450mA 0R44 MAX, 28 Q @ 100 MHz, 700 MHz SRF, SURFACE	MEGGITT ELECTRONICS	3612-T-R10-J
L3	23642/533	INDUCTOR-FIXED 10uH +/- 5% EPOXY-MOULD, 150mA 2R1 MAX, 30 Q @ 2.52 MHz, 36 MHz SRF, SURFACE MOUNTED,	MEGGITT ELECTRONICS	3612-T-100-J
L4	23642/555	INDUCTOR-FIXED 10uH +/- 10% COATED-LACQUER, MINIATURE, 470mA 0R9 MAX, 45 Q @ 7.9 MHz, 45 MHz	MEGGITT ELECTRONICS	C11-406/8/27520/006
L5	23642/555	INDUCTOR-FIXED 10uH +/- 10% COATED-LACQUER, MINIATURE, 470mA 0R9 MAX, 45 Q @ 7.9 MHz, 45 MHz	MEGGITT ELECTRONICS	C11-406/8/27520/006
L6	23642/533	INDUCTOR-FIXED 10uH +/- 5% EPOXY-MOULD, 150mA 2R1 MAX, 30 Q @ 2.52 MHz, 36 MHz SRF, SURFACE MOUNTED,	MEGGITT ELECTRONICS	3612-T-100-J
L7	23642/555	INDUCTOR-FIXED 10uH +/- 10% COATED-LACQUER, MINIATURE, 470mA 0R9 MAX, 45 Q @ 7.9 MHz, 45 MHz	MEGGITT ELECTRONICS	C11-406/8/27520/006
L8	23642/533	INDUCTOR-FIXED 10uH +/- 5% EPOXY-MOULD, 150mA 2R1 MAX, 30 Q @ 2.52 MHz, 36 MHz SRF, SURFACE MOUNTED,	MEGGITT ELECTRONICS	3612-T-100-J
L9	23642/555	INDUCTOR-FIXED 10uH +/- 10% COATED-LACQUER, MINIATURE, 470mA 0R9 MAX, 45 Q @ 7.9 MHz, 45 MHz	MEGGITT ELECTRONICS	C11-406/8/27520/006
L11	23642/716	INDUCTOR-FIXED 3.3uH +/- 5% EPOXY-MOULD, 260mA 1R2 MAX, 30 Q @ 7.96 MHz, 60 MHz SRF, SURFACE MOUNTED,	MEGGITT ELECTRONICS	3612-T-3R3-J
L12	23642/533	INDUCTOR-FIXED 10uH +/- 5% EPOXY-MOULD, 150mA 2R1 MAX, 30 Q @ 2.52 MHz, 36 MHz SRF, SURFACE MOUNTED,	MEGGITT ELECTRONICS	3612-T-100-J
L13	23642/533	INDUCTOR-FIXED 10uH +/- 5% EPOXY-MOULD, 150mA 2R1 MAX, 30 Q @ 2.52 MHz, 36 MHz SRF, SURFACE MOUNTED,	MEGGITT ELECTRONICS	3612-T-100-J
L15	23642/706	INDUCTOR-FIXED 15uH +/- 5% EPOXY-MOULD, 130mA 2R8 MAX, 30 Q @ 2.52 MHz, 30 MHz SRF, SURFACE MOUNTED,	MEGGITT ELECTRONICS	3612-T-150-J
L16	23642/707	INDUCTOR-FIXED 100uH +/- 5% EPOXY-MOULD, 40mA 10R MAX, 20 Q @ 0.796 MHz, 10 MHz SRF, SURFACE	MEGGITT ELECTRONICS	3612-T-101-J
L17	23642/707	INDUCTOR-FIXED 100uH +/- 5% EPOXY-MOULD, 40mA 10R MAX, 20 Q @ 0.796 MHz, 10 MHz SRF, SURFACE	MEGGITT ELECTRONICS	3612-T-101-J
L20 to L26	23642/533	INDUCTOR-FIXED 10uH +/- 5% EPOXY-MOULD, 150mA 2R1 MAX, 30 Q @ 2.52 MHz, 36 MHz SRF, SURFACE MOUNTED,	MEGGITT ELECTRONICS	3612-T-100-J
L27	23642/537	INDUCTOR-FIXED 4.7uH +/- 5% EPOXY-MOULD, 220mA 1R5 MAX, 30 Q @ 7.96 MHz, 50 MHz SRF, SURFACE MOUNTED,	MEGGITT ELECTRONICS	3612-T-4R7-J
L28	23642/064	INDUCTOR-FIXED 1mH +/- 10% UNSCREENED, AIR-CORED, 510mA 1R176 MAX, 20 Q @ 0.796 MHz, 13mm HIGH MAX,	TOKO (UK) LTD	494HYF0140K
L29	23642/064	INDUCTOR-FIXED 1mH +/- 10% UNSCREENED, AIR-CORED, 510mA 1R176 MAX, 20 Q @ 0.796 MHz, 13mm HIGH MAX,	TOKO (UK) LTD	494HYF0140K
PLA to PLF	23435/188	TERMINAL CONNECTOR-PIN, 0.64mm SQUARE, 5.97mm HIGH, PCB-MOUNTING, SINGLE-ENDED, PHOSPHOR BRONZE,	BERG ELECTRONICS	75401-001

10.7 MHz IF & Log Amp A4/1 (contd.)

Cir. Ref.	MI part number	Description	Manufacturer	Manufacturer's part number
R1	24811/165	RESISTOR-FIXED METAL-FILM 475R +/- 1% 250mW 200V 50 ppm/DEG.C, SURFACE MOUNTED, SIZE MINI-MELF,	VISHAY COMPONENTS	SMM0204-475R-1%50ppm
R2	24811/150	RESISTOR-FIXED METAL-FILM 110R +/- 1% 250mW 200V 50 ppm/DEG.C, SURFACE MOUNTED, SIZE MINI-MELF,	VISHAY COMPONENTS	SMM0204-110R-1%50ppm
R3	24811/127	RESISTOR-FIXED METAL-FILM 12R1 +/- 1% 250mW 200V 50 ppm/DEG.C, SURFACE MOUNTED, SIZE MINI-MELF,	VISHAY COMPONENTS	SMM0204-12R1-1%50ppm
R4	25748/564	RESISTOR-VARIABLE CERMET LINEAR, 500R 10% 500mW 200V 100 ppm/DEG.C, MULTI-TURN, VERTICAL-PCB,	MEGGITT ELECTRONICS	4290W404/8/06411/501
R5	24811/171	RESISTOR-FIXED METAL-FILM 825R +/- 1% 250mW 200V 50 ppm/DEG.C, SURFACE MOUNTED, SIZE MINI-MELF,	VISHAY COMPONENTS	SMM0204-825R-1%50ppm
R7	24811/159	RESISTOR-FIXED METAL-FILM 274R +/- 1% 250mW 200V 50 ppm/DEG.C, SURFACE MOUNTED, SIZE MINI-MELF,	VISHAY COMPONENTS	SMM0204-274R-1%50ppm
R12	24811/213	RESISTOR-FIXED METAL-FILM 47K5 +/- 1% 250mW 200V 50 ppm/DEG.C, SURFACE MOUNTED, SIZE MINI-MELF,	VISHAY COMPONENTS	SMM0204-47K5-1%50ppm
R17	24811/161	RESISTOR-FIXED METAL-FILM 332R +/- 1% 250mW 200V 50 ppm/DEG.C, SURFACE MOUNTED, SIZE MINI-MELF,	VISHAY COMPONENTS	SMM0204-332R-1%50ppm
R18	24811/142	RESISTOR-FIXED METAL-FILM 51R1 +/- 1% 250mW 200V 50 ppm/DEG.C, SURFACE MOUNTED, SIZE MINI-MELF,	VISHAY COMPONENTS	SMM0204-51R1-1%50ppm
R20	24811/159	RESISTOR-FIXED METAL-FILM 274R +/- 1% 250mW 200V 50 ppm/DEG.C, SURFACE MOUNTED, SIZE MINI-MELF,	VISHAY COMPONENTS	SMM0204-274R-1%50ppm
R21	24811/170	RESISTOR-FIXED METAL-FILM 750R +/- 1% 250mW 200V 50 ppm/DEG.C, SURFACE MOUNTED, SIZE MINI-MELF,	VISHAY COMPONENTS	SMM0204-750R-1%50ppm
R22	24811/136	RESISTOR-FIXED METAL-FILM 30R1 +/- 1% 250mW 200V 50 ppm/DEG.C, SURFACE MOUNTED, SIZE MINI-MELF,	VISHAY COMPONENTS	SMM0204-30R1-1%50ppm
R23	24811/180	RESISTOR-FIXED METAL-FILM 2K +/- 1% 250mW 200V 50 ppm/DEG.C, SURFACE MOUNTED, SIZE MINI-MELF, (8mm	VISHAY COMPONENTS	SMM0204-2K0-1%50ppm
R24	24811/147	RESISTOR-FIXED METAL-FILM 82R5 +/- 1% 250mW 200V 50 ppm/DEG.C, SURFACE MOUNTED, SIZE MINI-MELF,	VISHAY COMPONENTS	SMM0204-82R5-1%50ppm
R25	24811/159	RESISTOR-FIXED METAL-FILM 274R +/- 1% 250mW 200V 50 ppm/DEG.C, SURFACE MOUNTED, SIZE MINI-MELF,	VISHAY COMPONENTS	SMM0204-274R-1%50ppm
R26	24811/171	RESISTOR-FIXED METAL-FILM 825R +/- 1% 250mW 200V 50 ppm/DEG.C, SURFACE MOUNTED, SIZE MINI-MELF,	VISHAY COMPONENTS	SMM0204-825R-1%50ppm
R27	24811/156	RESISTOR-FIXED METAL-FILM 200R +/- 1% 250mW 200V 50 ppm/DEG.C, SURFACE MOUNTED, SIZE MINI-MELF,	VISHAY COMPONENTS	SMM0204-200R-1%50ppm
R29	24811/158	RESISTOR-FIXED METAL-FILM 243R +/- 1% 250mW 200V 50 ppm/DEG.C, SURFACE MOUNTED, SIZE MINI-MELF,	VISHAY COMPONENTS	SMM0204-243R-1%50ppm
R30	24811/175	RESISTOR-FIXED METAL-FILM 1K21 +/- 1% 250mW 200V 50 ppm/DEG.C, SURFACE MOUNTED, SIZE MINI-MELF,	VISHAY COMPONENTS	SMM0204-1K21-1%50ppm
R31	25748/569	RESISTOR-VARIABLE CERMET LINEAR, 1K 10% 500mW 200V 100 ppm/DEG.C, MULTI-TURN, VERTICAL-PCB, 0.375in	MEGGITT ELECTRONICS	4290W404/8/06411/102
R32	24811/225	RESISTOR-FIXED METAL-FILM 150K +/- 1% 250mW 200V 50 ppm/DEG.C, SURFACE MOUNTED, SIZE MINI-MELF,	VISHAY COMPONENTS	SMM0204-150K-1%50ppm
R33	24811/177	RESISTOR-FIXED METAL-FILM 1K5 +/- 1% 250mW 200V 50 ppm/DEG.C, SURFACE MOUNTED, SIZE MINI-MELF, (8mm	VISHAY COMPONENTS	SMM0204-1K5-1%50ppm
R34	24811/150	RESISTOR-FIXED METAL-FILM 110R +/- 1% 250mW 200V 50 ppm/DEG.C, SURFACE MOUNTED, SIZE MINI-MELF,	VISHAY COMPONENTS	SMM0204-110R-1%50ppm
R35	24811/147	RESISTOR-FIXED METAL-FILM 82R5 +/- 1% 250mW 200V 50 ppm/DEG.C, SURFACE MOUNTED, SIZE MINI-MELF,	VISHAY COMPONENTS	SMM0204-82R5-1%50ppm
R36	24811/159	RESISTOR-FIXED METAL-FILM 274R +/- 1% 250mW 200V 50 ppm/DEG.C, SURFACE MOUNTED, SIZE MINI-MELF,	VISHAY COMPONENTS	SMM0204-274R-1%50ppm
R37	24811/171	RESISTOR-FIXED METAL-FILM 825R +/- 1% 250mW 200V 50 ppm/DEG.C, SURFACE MOUNTED, SIZE MINI-MELF,	VISHAY COMPONENTS	SMM0204-825R-1%50ppm

10.7 MHz IF & Log Amp A4/1 (contd.)

Cir. Ref.	MI part number	Description	Manufacturer	Manufacturer's part number
R38	24811/156	RESISTOR-FIXED METAL-FILM 200R +/- 1% 250mW 200V 50 ppm/DEG.C, SURFACE MOUNTED, SIZE MINI-MELF,	VISHAY COMPONENTS	SMM0204-200R-1%50ppm
R39	24811/127	RESISTOR-FIXED METAL-FILM 12R1 +/- 1% 250mW 200V 50 ppm/DEG.C, SURFACE MOUNTED, SIZE MINI-MELF,	VISHAY COMPONENTS	SMM0204-12R1-1%50ppm
R40	24811/158	RESISTOR-FIXED METAL-FILM 243R +/- 1% 250mW 200V 50 ppm/DEG.C, SURFACE MOUNTED, SIZE MINI-MELF,	VISHAY COMPONENTS	SMM0204-243R-1%50ppm
R41	24811/175	RESISTOR-FIXED METAL-FILM 1K21 +/- 1% 250mW 200V 50 ppm/DEG.C, SURFACE MOUNTED, SIZE MINI-MELF,	VISHAY COMPONENTS	SMM0204-1K21-1%50ppm
R42	25748/569	RESISTOR-VARIABLE CERMET LINEAR, 1K 10% 500mW 200V 100 ppm/DEG.C, MULTI-TURN, VERTICAL-PCB, 0.375in	MEGGITT ELECTRONICS	4290W404/8/06411/102
R43	24811/225	RESISTOR-FIXED METAL-FILM 150K +/- 1% 250mW 200V 50 ppm/DEG.C, SURFACE MOUNTED, SIZE MINI-MELF,	VISHAY COMPONENTS	SMM0204-150K-1%50ppm
R44	24811/177	RESISTOR-FIXED METAL-FILM 1K5 +/- 1% 250mW 200V 50 ppm/DEG.C, SURFACE MOUNTED, SIZE MINI-MELF, (8mm	VISHAY COMPONENTS	SMM0204-1K5-1%50ppm
R45	24811/150	RESISTOR-FIXED METAL-FILM 110R +/- 1% 250mW 200V 50 ppm/DEG.C, SURFACE MOUNTED, SIZE MINI-MELF,	VISHAY COMPONENTS	SMM0204-110R-1%50ppm
R46	24811/142	RESISTOR-FIXED METAL-FILM 51R1 +/- 1% 250mW 200V 50 ppm/DEG.C, SURFACE MOUNTED, SIZE MINI-MELF,	VISHAY COMPONENTS	SMM0204-51R1-1%50ppm
R47	24811/159	RESISTOR-FIXED METAL-FILM 274R +/- 1% 250mW 200V 50 ppm/DEG.C, SURFACE MOUNTED, SIZE MINI-MELF,	VISHAY COMPONENTS	SMM0204-274R-1%50ppm
R48	24811/171	RESISTOR-FIXED METAL-FILM 825R +/- 1% 250mW 200V 50 ppm/DEG.C, SURFACE MOUNTED, SIZE MINI-MELF,	VISHAY COMPONENTS	SMM0204-825R-1%50ppm
R49	24811/142	RESISTOR-FIXED METAL-FILM 51R1 +/- 1% 250mW 200V 50 ppm/DEG.C, SURFACE MOUNTED, SIZE MINI-MELF,	VISHAY COMPONENTS	SMM0204-51R1-1%50ppm
R50	24811/127	RESISTOR-FIXED METAL-FILM 12R1 +/- 1% 250mW 200V 50 ppm/DEG.C, SURFACE MOUNTED, SIZE MINI-MELF,	VISHAY COMPONENTS	SMM0204-12R1-1%50ppm
R51	24811/161	RESISTOR-FIXED METAL-FILM 332R +/- 1% 250mW 200V 50 ppm/DEG.C, SURFACE MOUNTED, SIZE MINI-MELF,	VISHAY COMPONENTS	SMM0204-332R-1%50ppm
R52	24811/171	RESISTOR-FIXED METAL-FILM 825R +/- 1% 250mW 200V 50 ppm/DEG.C, SURFACE MOUNTED, SIZE MINI-MELF,	VISHAY COMPONENTS	SMM0204-825R-1%50ppm
R53	24811/157	RESISTOR-FIXED METAL-FILM 221R +/- 1% 250mW 200V 50 ppm/DEG.C, SURFACE MOUNTED, SIZE MINI-MELF,	VISHAY COMPONENTS	SMM0204-221R-1%50ppm
R54	24811/180	RESISTOR-FIXED METAL-FILM 2K +/- 1% 250mW 200V 50 ppm/DEG.C, SURFACE MOUNTED, SIZE MINI-MELF, (8mm	VISHAY COMPONENTS	SMM0204-2K0-1%50ppm
R55	24811/153	RESISTOR-FIXED METAL-FILM 150R +/- 1% 250mW 200V 50 ppm/DEG.C, SURFACE MOUNTED, SIZE MINI-MELF,	VISHAY COMPONENTS	SMM0204-150R-1%50ppm
R56	24811/180	RESISTOR-FIXED METAL-FILM 2K +/- 1% 250mW 200V 50 ppm/DEG.C, SURFACE MOUNTED, SIZE MINI-MELF, (8mm	VISHAY COMPONENTS	SMM0204-2K0-1%50ppm
R57	24811/147	RESISTOR-FIXED METAL-FILM 82R5 +/- 1% 250mW 200V 50 ppm/DEG.C, SURFACE MOUNTED, SIZE MINI-MELF,	VISHAY COMPONENTS	SMM0204-82R5-1%50ppm
R58	24811/160	RESISTOR-FIXED METAL-FILM 301R +/- 1% 250mW 200V 50 ppm/DEG.C, SURFACE MOUNTED, SIZE MINI-MELF,	VISHAY COMPONENTS	SMM0204-301R-1%50ppm
R59	24811/168	RESISTOR-FIXED METAL-FILM 619R +/- 1% 250mW 200V 50 ppm/DEG.C, SURFACE MOUNTED, SIZE MINI-MELF,	VISHAY COMPONENTS	SMM0204-619R-1%50ppm
R60	24811/156	RESISTOR-FIXED METAL-FILM 200R +/- 1% 250mW 200V 50 ppm/DEG.C, SURFACE MOUNTED, SIZE MINI-MELF,	VISHAY COMPONENTS	SMM0204-200R-1%50ppm
R61	24811/127	RESISTOR-FIXED METAL-FILM 12R1 +/- 1% 250mW 200V 50 ppm/DEG.C, SURFACE MOUNTED, SIZE MINI-MELF,	VISHAY COMPONENTS	SMM0204-12R1-1%50ppm
R62	24811/158	RESISTOR-FIXED METAL-FILM 243R +/- 1% 250mW 200V 50 ppm/DEG.C, SURFACE MOUNTED, SIZE MINI-MELF,	VISHAY COMPONENTS	SMM0204-243R-1%50ppm
R63	24811/175	RESISTOR-FIXED METAL-FILM 1K21 +/- 1% 250mW 200V 50 ppm/DEG.C, SURFACE MOUNTED, SIZE MINI-MELF,	VISHAY COMPONENTS	SMM0204-1K21-1%50ppm

Cir. Ref.	MI part number	Description	Manufacturer	Manufacturer's part number
10.7 MHz IF & Log Amp A4/1 (contd.)				
R64	25748/569	RESISTOR-VARIABLE CERMET LINEAR, 1K 10% 500mW 200V 100 ppm/DEG.C, MULTI-TURN, VERTICAL-PCB, 0.375in	MEGGITT ELECTRONICS	4290W404/8/06411/102
R65	24811/225	RESISTOR-FIXED METAL-FILM 150K +/- 1% 250mW 200V 50 ppm/DEG.C, SURFACE MOUNTED, SIZE MINI-MELF,	VISHAY COMPONENTS	SMM0204-150K-1%50ppm
R66	24811/177	RESISTOR-FIXED METAL-FILM 1K5 +/- 1% 250mW 200V 50 ppm/DEG.C, SURFACE MOUNTED, SIZE MINI-MELF, (8mm	VISHAY COMPONENTS	SMM0204-1K5-1%50ppm
R67	24811/150	RESISTOR-FIXED METAL-FILM 110R +/- 1% 250mW 200V 50 ppm/DEG.C, SURFACE MOUNTED, SIZE MINI-MELF,	VISHAY COMPONENTS	SMM0204-110R-1%50ppm
R68	24811/147	RESISTOR-FIXED METAL-FILM 82R5 +/- 1% 250mW 200V 50 ppm/DEG.C, SURFACE MOUNTED, SIZE MINI-MELF,	VISHAY COMPONENTS	SMM0204-82R5-1%50ppm
R69	24811/159	RESISTOR-FIXED METAL-FILM 274R +/- 1% 250mW 200V 50 ppm/DEG.C, SURFACE MOUNTED, SIZE MINI-MELF,	VISHAY COMPONENTS	SMM0204-274R-1%50ppm
R70	24811/171	RESISTOR-FIXED METAL-FILM 825R +/- 1% 250mW 200V 50 ppm/DEG.C, SURFACE MOUNTED, SIZE MINI-MELF,	VISHAY COMPONENTS	SMM0204-825R-1%50ppm
R71	24811/156	RESISTOR-FIXED METAL-FILM 200R +/- 1% 250mW 200V 50 ppm/DEG.C, SURFACE MOUNTED, SIZE MINI-MELF,	VISHAY COMPONENTS	SMM0204-200R-1%50ppm
R72	24811/127	RESISTOR-FIXED METAL-FILM 12R1 +/- 1% 250mW 200V 50 ppm/DEG.C, SURFACE MOUNTED, SIZE MINI-MELF,	VISHAY COMPONENTS	SMM0204-12R1-1%50ppm
R73	24811/158	RESISTOR-FIXED METAL-FILM 243R +/- 1% 250mW 200V 50 ppm/DEG.C, SURFACE MOUNTED, SIZE MINI-MELF,	VISHAY COMPONENTS	SMM0204-243R-1%50ppm
R74	24811/175	RESISTOR-FIXED METAL-FILM 1K21 +/- 1% 250mW 200V 50 ppm/DEG.C, SURFACE MOUNTED, SIZE MINI-MELF,	VISHAY COMPONENTS	SMM0204-1K21-1%50ppm
R75	25748/569	RESISTOR-VARIABLE CERMET LINEAR, 1K 10% 500mW 200V 100 ppm/DEG.C, MULTI-TURN, VERTICAL-PCB, 0.375in	MEGGITT ELECTRONICS	4290W404/8/06411/102
R76	24811/225	RESISTOR-FIXED METAL-FILM 150K +/- 1% 250mW 200V 50 ppm/DEG.C, SURFACE MOUNTED, SIZE MINI-MELF,	VISHAY COMPONENTS	SMM0204-150K-1%50ppm
R77	24811/177	RESISTOR-FIXED METAL-FILM 1K5 +/- 1% 250mW 200V 50 ppm/DEG.C, SURFACE MOUNTED, SIZE MINI-MELF, (8mm	VISHAY COMPONENTS	SMM0204-1K5-1%50ppm
R78	24811/150	RESISTOR-FIXED METAL-FILM 110R +/- 1% 250mW 200V 50 ppm/DEG.C, SURFACE MOUNTED, SIZE MINI-MELF,	VISHAY COMPONENTS	SMM0204-110R-1%50ppm
R79	24811/142	RESISTOR-FIXED METAL-FILM 51R1 +/- 1% 250mW 200V 50 ppm/DEG.C, SURFACE MOUNTED, SIZE MINI-MELF,	VISHAY COMPONENTS	SMM0204-51R1-1%50ppm
R81	24811/175	RESISTOR-FIXED METAL-FILM 1K21 +/- 1% 250mW 200V 50 ppm/DEG.C, SURFACE MOUNTED, SIZE MINI-MELF,	VISHAY COMPONENTS	SMM0204-1K21-1%50ppm
R82	24811/159	RESISTOR-FIXED METAL-FILM 274R +/- 1% 250mW 200V 50 ppm/DEG.C, SURFACE MOUNTED, SIZE MINI-MELF,	VISHAY COMPONENTS	SMM0204-274R-1%50ppm
R88 to R97	24811/197	RESISTOR-FIXED METAL-FILM 10K +/- 1% 250mW 200V 50 ppm/DEG.C, SURFACE MOUNTED, SIZE MINI-MELF, (8mm	VISHAY COMPONENTS	SMM0204-10K-1%50ppm
R99	24811/177	RESISTOR-FIXED METAL-FILM 1K5 +/- 1% 250mW 200V 50 ppm/DEG.C, SURFACE MOUNTED, SIZE MINI-MELF, (8mm	VISHAY COMPONENTS	SMM0204-1K5-1%50ppm
R100	24811/211	RESISTOR-FIXED METAL-FILM 39K2 +/- 1% 250mW 200V 50 ppm/DEG.C, SURFACE MOUNTED, SIZE MINI-MELF,	VISHAY COMPONENTS	SMM0204-39K2-1%50ppm
R101	24811/201	RESISTOR-FIXED METAL-FILM 15K +/- 1% 250mW 200V 50 ppm/DEG.C, SURFACE MOUNTED, SIZE MINI-MELF, (8mm	VISHAY COMPONENTS	SMM0204-15K-1%50ppm
R103	24811/197	RESISTOR-FIXED METAL-FILM 10K +/- 1% 250mW 200V 50 ppm/DEG.C, SURFACE MOUNTED, SIZE MINI-MELF, (8mm	VISHAY COMPONENTS	SMM0204-10K-1%50ppm
R104	24811/179	RESISTOR-FIXED METAL-FILM 1K82 +/- 1% 250mW 200V 50 ppm/DEG.C, SURFACE MOUNTED, SIZE MINI-MELF,	VISHAY COMPONENTS	SMM0204-1K82-1%50ppm
R105	24811/185	RESISTOR-FIXED METAL-FILM 3K32 +/- 1% 250mW 200V 50 ppm/DEG.C, SURFACE MOUNTED, SIZE MINI-MELF,	VISHAY COMPONENTS	SMM0204-3K32-1%50ppm
R106	24811/179	RESISTOR-FIXED METAL-FILM 1K82 +/- 1% 250mW 200V 50 ppm/DEG.C, SURFACE MOUNTED, SIZE MINI-MELF,	VISHAY COMPONENTS	SMM0204-1K82-1%50ppm

Cir. Ref.	MI part number	Description	Manufacturer	Manufacturer's part number
10.7 MHz IF & Log Amp A4/1 (contd.)				
R110	24811/161	RESISTOR-FIXED METAL-FILM 332R +/- 1% 250mW 200V 50 ppm/DEG.C, SURFACE MOUNTED, SIZE MINI-MELF,	VISHAY COMPONENTS	SMM0204-332R-1%50ppm
R111	24811/159	RESISTOR-FIXED METAL-FILM 274R +/- 1% 250mW 200V 50 ppm/DEG.C, SURFACE MOUNTED, SIZE MINI-MELF,	VISHAY COMPONENTS	SMM0204-274R-1%50ppm
R112	24811/171	RESISTOR-FIXED METAL-FILM 825R +/- 1% 250mW 200V 50 ppm/DEG.C, SURFACE MOUNTED, SIZE MINI-MELF,	VISHAY COMPONENTS	SMM0204-825R-1%50ppm
R113	24811/165	RESISTOR-FIXED METAL-FILM 475R +/- 1% 250mW 200V 50 ppm/DEG.C, SURFACE MOUNTED, SIZE MINI-MELF,	VISHAY COMPONENTS	SMM0204-475R-1%50ppm
R116	24811/156	RESISTOR-FIXED METAL-FILM 200R +/- 1% 250mW 200V 50 ppm/DEG.C, SURFACE MOUNTED, SIZE MINI-MELF,	VISHAY COMPONENTS	SMM0204-200R-1%50ppm
R117	24811/223	RESISTOR-FIXED METAL-FILM 121K +/- 1% 250mW 200V 50 ppm/DEG.C, SURFACE MOUNTED, SIZE MINI-MELF,	VISHAY COMPONENTS	SMM0204-121K-1%50ppm
R118	24811/220	RESISTOR-FIXED METAL-FILM 90K9 +/- 1% 250mW 200V 50 ppm/DEG.C, SURFACE MOUNTED, SIZE MINI-MELF,	VISHAY COMPONENTS	SMM0204-90K9-1%50ppm
R119	25748/565	RESISTOR-VARIABLE CERMET LINEAR, 20K 10% 500mW 200V 100 ppm/DEG.C, MULTI-TURN, VERTICAL-PCB,	MEGGITT ELECTRONICS	4290W404/8/06411/203
R120	24811/220	RESISTOR-FIXED METAL-FILM 90K9 +/- 1% 250mW 200V 50 ppm/DEG.C, SURFACE MOUNTED, SIZE MINI-MELF,	VISHAY COMPONENTS	SMM0204-90K9-1%50ppm
R121	24811/223	RESISTOR-FIXED METAL-FILM 121K +/- 1% 250mW 200V 50 ppm/DEG.C, SURFACE MOUNTED, SIZE MINI-MELF,	VISHAY COMPONENTS	SMM0204-121K-1%50ppm
R122	25748/568	RESISTOR-VARIABLE CERMET LINEAR, 500K 10% 500mW 200V 100 ppm/DEG.C, MULTI-TURN, VERTICAL-PCB,	MEGGITT ELECTRONICS	4290W404/8/06411/504
R124	24811/157	RESISTOR-FIXED METAL-FILM 221R +/- 1% 250mW 200V 50 ppm/DEG.C, SURFACE MOUNTED, SIZE MINI-MELF,	VISHAY COMPONENTS	SMM0204-221R-1%50ppm
R125	24811/174	RESISTOR-FIXED METAL-FILM 1K1 +/- 1% 250mW 200V 50 ppm/DEG.C, SURFACE MOUNTED, SIZE MINI-MELF, (8mm	VISHAY COMPONENTS	SMM0204-1K1-1%50ppm
R126	24811/174	RESISTOR-FIXED METAL-FILM 1K1 +/- 1% 250mW 200V 50 ppm/DEG.C, SURFACE MOUNTED, SIZE MINI-MELF, (8mm	VISHAY COMPONENTS	SMM0204-1K1-1%50ppm
R127	24811/216	RESISTOR-FIXED METAL-FILM 61K9 +/- 1% 250mW 200V 50 ppm/DEG.C, SURFACE MOUNTED, SIZE MINI-MELF,	VISHAY COMPONENTS	SMM0204-61K9-1%50ppm
R128	24811/216	RESISTOR-FIXED METAL-FILM 61K9 +/- 1% 250mW 200V 50 ppm/DEG.C, SURFACE MOUNTED, SIZE MINI-MELF,	VISHAY COMPONENTS	SMM0204-61K9-1%50ppm
R130	24811/245	RESISTOR-FIXED METAL-FILM 1M +/- 1% 250mW 200V 50 ppm/DEG.C, SURFACE MOUNTED, SIZE MINI-MELF, (8mm	VISHAY COMPONENTS	SMM0204-1M0-1%50ppm
R131	24811/204	RESISTOR-FIXED METAL-FILM 20K +/- 1% 250mW 200V 50 ppm/DEG.C, SURFACE MOUNTED, SIZE MINI-MELF, (8mm	VISHAY COMPONENTS	SMM0204-20K-1%50ppm
R132	24811/245	RESISTOR-FIXED METAL-FILM 1M +/- 1% 250mW 200V 50 ppm/DEG.C, SURFACE MOUNTED, SIZE MINI-MELF, (8mm	VISHAY COMPONENTS	SMM0204-1M0-1%50ppm
R133	24811/204	RESISTOR-FIXED METAL-FILM 20K +/- 1% 250mW 200V 50 ppm/DEG.C, SURFACE MOUNTED, SIZE MINI-MELF, (8mm	VISHAY COMPONENTS	SMM0204-20K-1%50ppm
R134	24811/245	RESISTOR-FIXED METAL-FILM 1M +/- 1% 250mW 200V 50 ppm/DEG.C, SURFACE MOUNTED, SIZE MINI-MELF, (8mm	VISHAY COMPONENTS	SMM0204-1M0-1%50ppm
R135	24811/204	RESISTOR-FIXED METAL-FILM 20K +/- 1% 250mW 200V 50 ppm/DEG.C, SURFACE MOUNTED, SIZE MINI-MELF, (8mm	VISHAY COMPONENTS	SMM0204-20K-1%50ppm
R136	24811/180	RESISTOR-FIXED METAL-FILM 2K +/- 1% 250mW 200V 50 ppm/DEG.C, SURFACE MOUNTED, SIZE MINI-MELF, (8mm	VISHAY COMPONENTS	SMM0204-2K0-1%50ppm
R137	24811/142	RESISTOR-FIXED METAL-FILM 51R1 +/- 1% 250mW 200V 50 ppm/DEG.C, SURFACE MOUNTED, SIZE MINI-MELF,	VISHAY COMPONENTS	SMM0204-51R1-1%50ppm
R139	24811/167	RESISTOR-FIXED METAL-FILM 562R +/- 1% 250mW 200V 50 ppm/DEG.C, SURFACE MOUNTED, SIZE MINI-MELF,	VISHAY COMPONENTS	SMM0204-562R-1%50ppm
R140	24811/142	RESISTOR-FIXED METAL-FILM 51R1 +/- 1% 250mW 200V 50 ppm/DEG.C, SURFACE MOUNTED, SIZE MINI-MELF,	VISHAY COMPONENTS	SMM0204-51R1-1%50ppm

Cir. Ref.	MI part number	Description	Manufacturer	Manufacturer's part number
10.7 MHz IF & Log Amp A4/1 (contd.)				
R141	24811/190	RESISTOR-FIXED METAL-FILM 5K11 +/- 1% 250mW 200V 50 ppm/DEG.C, SURFACE MOUNTED, SIZE MINI-MELF,	VISHAY COMPONENTS	SMM0204-5K11-1%50ppm
R142	24811/177	RESISTOR-FIXED METAL-FILM 1K5 +/- 1% 250mW 200V 50 ppm/DEG.C, SURFACE MOUNTED, SIZE MINI-MELF, (8mm	VISHAY COMPONENTS	SMM0204-1K5-1%50ppm
R143	24811/153	RESISTOR-FIXED METAL-FILM 150R +/- 1% 250mW 200V 50 ppm/DEG.C, SURFACE MOUNTED, SIZE MINI-MELF,	VISHAY COMPONENTS	SMM0204-150R-1%50ppm
R144	24811/197	RESISTOR-FIXED METAL-FILM 10K +/- 1% 250mW 200V 50 ppm/DEG.C, SURFACE MOUNTED, SIZE MINI-MELF, (8mm	VISHAY COMPONENTS	SMM0204-10K-1%50ppm
R145	24811/189	RESISTOR-FIXED METAL-FILM 4K75 +/- 1% 250mW 200V 50 ppm/DEG.C, SURFACE MOUNTED, SIZE MINI-MELF,	VISHAY COMPONENTS	SMM0204-4K75-1%50ppm
R146	24811/142	RESISTOR-FIXED METAL-FILM 51R1 +/- 1% 250mW 200V 50 ppm/DEG.C, SURFACE MOUNTED, SIZE MINI-MELF,	VISHAY COMPONENTS	SMM0204-51R1-1%50ppm
R147	24811/180	RESISTOR-FIXED METAL-FILM 2K +/- 1% 250mW 200V 50 ppm/DEG.C, SURFACE MOUNTED, SIZE MINI-MELF, (8mm	VISHAY COMPONENTS	SMM0204-2K0-1%50ppm
R148	24811/171	RESISTOR-FIXED METAL-FILM 825R +/- 1% 250mW 200V 50 ppm/DEG.C, SURFACE MOUNTED, SIZE MINI-MELF,	VISHAY COMPONENTS	SMM0204-825R-1%50ppm
R149	24811/142	RESISTOR-FIXED METAL-FILM 51R1 +/- 1% 250mW 200V 50 ppm/DEG.C, SURFACE MOUNTED, SIZE MINI-MELF,	VISHAY COMPONENTS	SMM0204-51R1-1%50ppm
R153	24811/208	RESISTOR-FIXED METAL-FILM 30K1 +/- 1% 250mW 200V 50 ppm/DEG.C, SURFACE MOUNTED, SIZE MINI-MELF,	VISHAY COMPONENTS	SMM0204-30K1-1%50ppm
R155	24811/170	RESISTOR-FIXED METAL-FILM 750R +/- 1% 250mW 200V 50 ppm/DEG.C, SURFACE MOUNTED, SIZE MINI-MELF,	VISHAY COMPONENTS	SMM0204-750R-1%50ppm
R158	24811/186	RESISTOR-FIXED METAL-FILM 3K65 +/- 1% 250mW 200V 50 ppm/DEG.C, SURFACE MOUNTED, SIZE MINI-MELF,	VISHAY COMPONENTS	SMM0204-3K65-1%50ppm
R160	24811/166	RESISTOR-FIXED METAL-FILM 511R +/- 1% 250mW 200V 50 ppm/DEG.C, SURFACE MOUNTED, SIZE MINI-MELF,	VISHAY COMPONENTS	SMM0204-511R-1%50ppm
TP1	23435/188	TERMINAL CONNECTOR-PIN, 0.64mm SQUARE, 5.97mm HIGH, PCB-MOUNTING, SINGLE-ENDED, PHOSPHOR BRONZE,	BERG ELECTRONICS	75401-001
TP8	23435/188	TERMINAL CONNECTOR-PIN, 0.64mm SQUARE, 5.97mm HIGH, PCB-MOUNTING, SINGLE-ENDED, PHOSPHOR BRONZE,	BERG ELECTRONICS	75401-001
TR4 to TR14	28457/851	TRANSISTOR NPN BIPOLAR BFS17... 15V 1.3GHz 250mW 50mA 20hFE MIN @ 2mA, MARKING CODE E1, SURFACE	PHILIPS	BFS17
TR15	28487/809	TRANSISTOR NPN BIPOLAR BFR93A... 12V 5GHz 250mW 35mA 40hFE MIN @ 30mA, MARKING CODE R2, SURFACE	PHILIPS	BFR93A
TR16 to TR20	28457/851	TRANSISTOR NPN BIPOLAR BFS17... 15V 1.3GHz 250mW 50mA 20hFE MIN @ 2mA, MARKING CODE E1, SURFACE	PHILIPS	BFS17
XL1	23642/944	FILTER HF, PCB-MOUNT, CERAMIC, RADIAL, 10.7MHz, 280KHz B/WIDTH @ -3dB, 650KHz B/WIDTH @ -20dB, 330	MURATA ELECTRONICS	SFE10.7MA5-A
XL2	23642/944	FILTER HF, PCB-MOUNT, CERAMIC, RADIAL, 10.7MHz, 280KHz B/WIDTH @ -3dB, 650KHz B/WIDTH @ -20dB, 330	MURATA ELECTRONICS	SFE10.7MA5-A
XL3 to XL6	28312/125	CRYSTAL 10.7 MHz +/- 20 ppm, 30pF SERIES RESONANCE, 25mH - 16R ESR MAX, HC-43/U, WIRE	C-MAC CRYSTALS LTD	C5742

Cir. Ref.	MI part number	Description	Manufacturer	Manufacturer's part number

Output amplifier A6/1

When ordering, prefix circuit reference with A6/1.

	44829-925	Complete unit	Issue 2	
C1	26386/777	CAPACITOR-FIXED CERAMIC 47nF +/-20% 63V X7R/2C1, MULTILAYER, SURFACE-MOUNTED, SIZE 1206, NICKEL	PHILIPS	1206-2R-473-K9-BBC
C2	26343/491	CAPACITOR-FIXED CERAMIC 2.2pF +/-0.25pF 63V NP0 SINGLELAYER, RADIAL, 2.5mm PWP, (TAPED).	VISHAY COMPONENTS	ROC-922-CAK-ACR-J
C3	26343/501	CAPACITOR-FIXED CERAMIC 1.5pF +/-0.5pF 63V P100 SINGLELAYER, RADIAL, 2.5mm PWP, (LOOSE).	VISHAY COMPONENTS	ROA-915-CAK-AWS-J
C4	26386/833	CAPACITOR-FIXED CERAMIC 560pF +/-5% 50V NP0 MULTILAYER, SURFACE-MOUNTED, SIZE 0805, NICKEL	ROHM ELECTRONICS LTD	MCH21-5A-561-JP
C5	26386/871	CAPACITOR-FIXED CERAMIC 4.7nF +/-10% 50V X7R/2C1, MULTILAYER, SURFACE-MOUNTED, SIZE 0805, NICKEL	ROHM ELECTRONICS LTD	MCH21-5C-472-KP
C6	26386/869	CAPACITOR-FIXED CERAMIC 3.3nF +/-10% 50V X7R/2C1, MULTILAYER, SURFACE-MOUNTED, SIZE 0805, NICKEL	ROHM ELECTRONICS LTD	MCH21-5C-332-KP
C7	26386/899	CAPACITOR-FIXED CERAMIC 100nF +/-10% 50V X7R/2C1, MULTILAYER, SURFACE-MOUNTED, SIZE 1206, NICKEL	ROHM ELECTRONICS LTD	MCH31-5C-104-KP
C8	26386/777	CAPACITOR-FIXED CERAMIC 47nF +/-20% 63V X7R/2C1, MULTILAYER, SURFACE-MOUNTED, SIZE 1206, NICKEL	PHILIPS	1206-2R-473-K9-BBC
C9	26386/871	CAPACITOR-FIXED CERAMIC 4.7nF +/-10% 50V X7R/2C1, MULTILAYER, SURFACE-MOUNTED, SIZE 0805, NICKEL	ROHM ELECTRONICS LTD	MCH21-5C-472-KP
C10	26386/777	CAPACITOR-FIXED CERAMIC 47nF +/-20% 63V X7R/2C1, MULTILAYER, SURFACE-MOUNTED, SIZE 1206, NICKEL	PHILIPS	1206-2R-473-K9-BBC
C14	26386/814	CAPACITOR-FIXED CERAMIC 15pF +/-5% 50V NP0 MULTILAYER, SURFACE-MOUNTED, SIZE 0805, NICKEL	ROHM ELECTRONICS LTD	MCH21-5A-150-JP
C15 to C25	26386/777	CAPACITOR-FIXED CERAMIC 47nF +/-20% 63V X7R/2C1, MULTILAYER, SURFACE-MOUNTED, SIZE 1206, NICKEL	PHILIPS	1206-2R-473-K9-BBC
C26	26386/759	CAPACITOR-FIXED CERAMIC 22nF +/-20% 50V X7R/2C1, MULTILAYER, SURFACE-MOUNTED, SIZE 1206, NICKEL	PHILIPS	1206-2R-223-K9-BBC
C28	26451/012	CAPACITOR-FIXED ALUMINIUM 100uF +/-20% 16V ELECTROLYTIC, SURFACE-MOUNTED, SIZE 8.3 x 8.3mm,	PANASONIC INDUSTRIAL	ECE-V-1CA-101P
C29	26451/012	CAPACITOR-FIXED ALUMINIUM 100uF +/-20% 16V ELECTROLYTIC, SURFACE-MOUNTED, SIZE 8.3 x 8.3mm,	PANASONIC INDUSTRIAL	ECE-V-1CA-101P
C30	26386/815	CAPACITOR-FIXED CERAMIC 18pF +/-5% 50V NP0 MULTILAYER, SURFACE-MOUNTED, SIZE 0805, NICKEL	ROHM ELECTRONICS LTD	MCH21-5A-180-JP
C31	26386/866	CAPACITOR-FIXED CERAMIC 1.8nF +/-10% 50V X7R/2C1, MULTILAYER, SURFACE-MOUNTED, SIZE 0805, NICKEL	AVX LTD	0805-5C-182-KAT-1A
C32	26386/777	CAPACITOR-FIXED CERAMIC 47nF +/-20% 63V X7R/2C1, MULTILAYER, SURFACE-MOUNTED, SIZE 1206, NICKEL	PHILIPS	1206-2R-473-K9-BBC
C33	26386/826	CAPACITOR-FIXED CERAMIC 150pF +/-5% 50V NP0 MULTILAYER, SURFACE-MOUNTED, SIZE 0805, NICKEL	ROHM ELECTRONICS LTD	MCH21-5A-151-JP
C34	26386/824	CAPACITOR-FIXED CERAMIC 100pF +/-5% 50V NP0 MULTILAYER, SURFACE-MOUNTED, SIZE 0805, NICKEL	ROHM ELECTRONICS LTD	MCH21-5A-101-JP
C35	26386/829	CAPACITOR-FIXED CERAMIC 270pF +/-5% 50V NP0 MULTILAYER, SURFACE-MOUNTED, SIZE 0805, NICKEL	ROHM ELECTRONICS LTD	MCH21-5A-271-JP
C37	26386/759	CAPACITOR-FIXED CERAMIC 22nF +/-20% 50V X7R/2C1, MULTILAYER, SURFACE-MOUNTED, SIZE 1206, NICKEL	PHILIPS	1206-2R-223-K9-BBC
C38	26386/777	CAPACITOR-FIXED CERAMIC 47nF +/-20% 63V X7R/2C1, MULTILAYER, SURFACE-MOUNTED, SIZE 1206, NICKEL	PHILIPS	1206-2R-473-K9-BBC

Cir. Ref.	MI part number	Description	Manufacturer	Manufacturer's part number
Output amplifier A6/1 (contd.)				
C39	26386/777	CAPACITOR-FIXED CERAMIC 47nF +/-20% 63V X7R/2C1, MULTILAYER, SURFACE-MOUNTED, SIZE 1206, NICKEL	PHILIPS	1206-2R-473-K9-BBC
C44	26386/863	CAPACITOR-FIXED CERAMIC 1nF +/-10% 50V X7R/2C1, MULTILAYER, SURFACE-MOUNTED, SIZE 0805, NICKEL	ROHM ELECTRONICS LTD	MCH21-5C-102-KP
C45 to C48	26386/875	CAPACITOR-FIXED CERAMIC 10nF +/-10% 50V X7R/2C1, MULTILAYER, SURFACE-MOUNTED, SIZE 0805, NICKEL	ROHM ELECTRONICS LTD	MCH21-5C-103-KP
D1 to D4	28383/932	DIODE PIN, HSMP-3810... 250mW 100V 1A 0.35pF Rs 4R0 MAX @ 100mA, MARKING CODE E0, LOW PROFILE,	HEWLETT-PACKARD	HSMP-3810-L31
D5	28383/903	DIODE SMALL-SIGNAL, BAV99... DUAL, 70V 100mA 1.1Vf @ 50mA, IN SERIES, MARKING CODE A7, SURFACE	PHILIPS	BAV99 (A7)
D6	28371/412	DIODE ZENER, BZX84-C5V1... 350mW 5.1V 5% 250mA MARKING CODE Z2, SURFACE MOUNTED, SOT-23, (8mm	PHILIPS	BZX84-C5V1
D7	28371/412	DIODE ZENER, BZX84-C5V1... 350mW 5.1V 5% 250mA MARKING CODE Z2, SURFACE MOUNTED, SOT-23, (8mm	PHILIPS	BZX84-C5V1
D8	28349/011	DIODE SMALL-SIGNAL, SCHOTTKY, 5082-2826... 250mW 15V 1.2pF 1Vf @ 20mA, BATCH MATCHED TO WITHIN 10mV	HEWLETT-PACKARD	5082-2826-T25
D9	28349/011	DIODE SMALL-SIGNAL, SCHOTTKY, 5082-2826... 250mW 15V 1.2pF 1Vf @ 20mA, BATCH MATCHED TO WITHIN 10mV	HEWLETT-PACKARD	5082-2826-T25
IC1	28461/464	IC-ANALOGUE MICROWAVE-AMP INA-03184... 4V 10mA GAIN 25dB @ 1.5GHz, 3dB BANDWIDTH DC-2.5GHz,	HEWLETT-PACKARD	INA-03184-TR1
IC2	28461/448	IC-ANALOGUE MICROWAVE-AMP MSA-0386... 5V 35mA GAIN 12dB @ 1GHz, 3dB BANDWIDTH DC-2.4GHz, BIPOLAR, 4	HEWLETT-PACKARD	MSA-0386-TR1
IC3	28461/801	IC-ANALOGUE MICROWAVE-AMP MSA-1105... 5.5V 60mA GAIN 10.5dB @1GHz, 3dB B/WTH 0.05-1.3GHz, BIPOLAR,	HEWLETT-PACKARD	MSA-1105
IC4	28461/317	IC-ANALOGUE OPERATIONAL AMP NE531... SINGLE, LINEAR, SLEW-RATE 35V/uS TYP, 8 PIN, DUAL-IN-LINE.	PHILIPS	NE531N
IC5	28461/411	IC-ANALOGUE OPERATIONAL AMP TL071... SINGLE, JFET INPUT, LOW NOISE, 8 PIN, SMALL-OUTLINE.	MOTOROLA INC.	TL071CD
L5	23642/557	INDUCTOR-FIXED 22uH +/- 10% COATED-LACQUER, MINIATURE, 260mA 3R MAX, 55 Q @ 2.5 MHz, 25 MHz	MEGGITT ELECTRONICS	C11-406/8/27520/010
L6	23642/557	INDUCTOR-FIXED 22uH +/- 10% COATED-LACQUER, MINIATURE, 260mA 3R MAX, 55 Q @ 2.5 MHz, 25 MHz	MEGGITT ELECTRONICS	C11-406/8/27520/010
L7	23642/535	INDUCTOR-FIXED 1uH +/- 5% EPOXY-MOULD, 400mA 0R7 MAX, 30 Q @ 7.96 MHz, 120 MHz SRF, SURFACE	MEGGITT ELECTRONICS	3612-T-1R0-J
L8	23642/519	INDUCTOR-FIXED 0.068uH +/- 5% EPOXY-MOULD, 450mA 0R36 MAX, 27 Q @ 100 MHz, 1K MHz SRF, SURFACE	MEGGITT ELECTRONICS	3612-T-068-J
L9	23642/064	INDUCTOR-FIXED 1mH +/- 10% UNSCREENED, AIR-CORED, 510mA 1R176 MAX, 20 Q @ 0.796 MHz, 13mm HIGH MAX,	TOKO (UK) LTD	494HYF0140K
L10	23642/519	INDUCTOR-FIXED 0.068uH +/- 5% EPOXY-MOULD, 450mA 0R36 MAX, 27 Q @ 100 MHz, 1K MHz SRF, SURFACE	MEGGITT ELECTRONICS	3612-T-068-J
L11	23642/519	INDUCTOR-FIXED 0.068uH +/- 5% EPOXY-MOULD, 450mA 0R36 MAX, 27 Q @ 100 MHz, 1K MHz SRF, SURFACE	MEGGITT ELECTRONICS	3612-T-068-J
L12	23642/516	INDUCTOR-FIXED 0.022uH +/- 10% EPOXY-MOULD, 450mA 0R2 MAX, 23 Q @ 100 MHz, 1.7K MHz SRF, SURFACE	MEGGITT ELECTRONICS	3612-T-022-K
L13	23642/064	INDUCTOR-FIXED 1mH +/- 10% UNSCREENED, AIR-CORED, 510mA 1R176 MAX, 20 Q @ 0.796 MHz, 13mm HIGH MAX,	TOKO (UK) LTD	494HYF0140K
PLA to PLC	23435/188	TERMINAL CONNECTOR-PIN, 0.64mm SQUARE, 5.97mm HIGH, PCB-MOUNTING, SINGLE-ENDED, PHOSPHOR BRONZE,	BERG ELECTRONICS	75401-001

Cir. Ref.	MI part number	Description	Manufacturer	Manufacturer's part number
Output amplifier A6/1 (contd.)				
PLC	23435/990	CONNECTOR SHORTING, SOCKET, 2 WAY, FOR 0.64mm SQ PINS, 2.54mm PITCH, 9.6mm HIGH, FREE MOUNTING,	BERG ELECTRONICS	65474-001
R1	24811/182	RESISTOR-FIXED METAL-FILM 2K43 +/- 1% 250mW 200V 50 ppm/DEG.C, SURFACE MOUNTED, SIZE MINI-MELF,	VISHAY COMPONENTS	SMM0204-2K43-1%50ppm
R2	24811/157	RESISTOR-FIXED METAL-FILM 221R +/- 1% 250mW 200V 50 ppm/DEG.C, SURFACE MOUNTED, SIZE MINI-MELF,	VISHAY COMPONENTS	SMM0204-221R-1%50ppm
R3	24811/157	RESISTOR-FIXED METAL-FILM 221R +/- 1% 250mW 200V 50 ppm/DEG.C, SURFACE MOUNTED, SIZE MINI-MELF,	VISHAY COMPONENTS	SMM0204-221R-1%50ppm
R4	24811/173	RESISTOR-FIXED METAL-FILM 1K +/- 1% 250mW 200V 50 ppm/DEG.C, SURFACE MOUNTED, SIZE MINI-MELF, (8mm	VISHAY COMPONENTS	SMM0204-1K0-1%-50ppm
R5	24762/558	RESISTOR-FIXED METAL-FILM 50R +/- 1% 250mW 250V 100 ppm/DEG.C, NON-INDUCTIVE, AXIAL CUT, AXIAL,	MEGGITT ELECTRONICS	H8N-50R-1%-100ppm
R6	24338/006	RESISTOR-FIXED METAL-GLAZE 220R +/- 5% 1W 100V 350 ppm/DEG.C, SURFACE MOUNTED, SIZE 2512, (12mm	VISHAY COMPONENTS	CR2512-220R-5%-P4
R7	24811/193	RESISTOR-FIXED METAL-FILM 6K81 +/- 1% 250mW 200V 50 ppm/DEG.C, SURFACE MOUNTED, SIZE MINI-MELF,	VISHAY COMPONENTS	SMM0204-6K81-1%50ppm
R8	24811/193	RESISTOR-FIXED METAL-FILM 6K81 +/- 1% 250mW 200V 50 ppm/DEG.C, SURFACE MOUNTED, SIZE MINI-MELF,	VISHAY COMPONENTS	SMM0204-6K81-1%50ppm
R9	24811/237	RESISTOR-FIXED METAL-FILM 475K +/- 1% 250mW 200V 50 ppm/DEG.C, SURFACE MOUNTED, SIZE MINI-MELF,	VISHAY COMPONENTS	SMM0204-475K-1%50ppm
R10	24811/237	RESISTOR-FIXED METAL-FILM 475K +/- 1% 250mW 200V 50 ppm/DEG.C, SURFACE MOUNTED, SIZE MINI-MELF,	VISHAY COMPONENTS	SMM0204-475K-1%50ppm
R11	24338/002	RESISTOR-FIXED METAL-GLAZE 100R +/- 5% 1W 100V 350 ppm/DEG.C, SURFACE MOUNTED, SIZE 2512, (12mm	VISHAY COMPONENTS	CR2512-100R-5%-P4
R15	24811/169	RESISTOR-FIXED METAL-FILM 681R +/- 1% 250mW 200V 50 ppm/DEG.C, SURFACE MOUNTED, SIZE MINI-MELF,	VISHAY COMPONENTS	SMM0204-681R-1%50ppm
R16	24811/147	RESISTOR-FIXED METAL-FILM 82R5 +/- 1% 250mW 200V 50 ppm/DEG.C, SURFACE MOUNTED, SIZE MINI-MELF,	VISHAY COMPONENTS	SMM0204-82R5-1%50ppm
R17	24811/189	RESISTOR-FIXED METAL-FILM 4K75 +/- 1% 250mW 200V 50 ppm/DEG.C, SURFACE MOUNTED, SIZE MINI-MELF,	VISHAY COMPONENTS	SMM0204-4K75-1%50ppm
R18	24811/189	RESISTOR-FIXED METAL-FILM 4K75 +/- 1% 250mW 200V 50 ppm/DEG.C, SURFACE MOUNTED, SIZE MINI-MELF,	VISHAY COMPONENTS	SMM0204-4K75-1%50ppm
R21	24811/187	RESISTOR-FIXED METAL-FILM 3K92 +/- 1% 250mW 200V 50 ppm/DEG.C, SURFACE MOUNTED, SIZE MINI-MELF,	VISHAY COMPONENTS	SMM0204-3K92-1%50ppm
R22	24811/173	RESISTOR-FIXED METAL-FILM 1K +/- 1% 250mW 200V 50 ppm/DEG.C, SURFACE MOUNTED, SIZE MINI-MELF, (8mm	VISHAY COMPONENTS	SMM0204-1K0-1%-50ppm
R24	24811/159	RESISTOR-FIXED METAL-FILM 274R +/- 1% 250mW 200V 50 ppm/DEG.C, SURFACE MOUNTED, SIZE MINI-MELF,	VISHAY COMPONENTS	SMM0204-274R-1%50ppm
R25	24811/157	RESISTOR-FIXED METAL-FILM 221R +/- 1% 250mW 200V 50 ppm/DEG.C, SURFACE MOUNTED, SIZE MINI-MELF,	VISHAY COMPONENTS	SMM0204-221R-1%50ppm
R26	24811/167	RESISTOR-FIXED METAL-FILM 562R +/- 1% 250mW 200V 50 ppm/DEG.C, SURFACE MOUNTED, SIZE MINI-MELF,	VISHAY COMPONENTS	SMM0204-562R-1%50ppm
R27	24811/153	RESISTOR-FIXED METAL-FILM 150R +/- 1% 250mW 200V 50 ppm/DEG.C, SURFACE MOUNTED, SIZE MINI-MELF,	VISHAY COMPONENTS	SMM0204-150R-1%50ppm
TP1	23435/188	TERMINAL CONNECTOR-PIN, 0.64mm SQUARE, 5.97mm HIGH, PCB-MOUNTING, SINGLE-ENDED, PHOSPHOR BRONZE,	BERG ELECTRONICS	75401-001
TP2	23435/188	TERMINAL CONNECTOR-PIN, 0.64mm SQUARE, 5.97mm HIGH, PCB-MOUNTING, SINGLE-ENDED, PHOSPHOR BRONZE,	BERG ELECTRONICS	75401-001
TP3	23435/188	TERMINAL CONNECTOR-PIN, 0.64mm SQUARE, 5.97mm HIGH, PCB-MOUNTING, SINGLE-ENDED, PHOSPHOR BRONZE,	BERG ELECTRONICS	75401-001

1st local oscillator control A7/1

When ordering, prefix circuit reference with A7/1.

Cir. Ref.	MI part number	Description	Manufacturer	Manufacturer's part number
	448830-111	Complete unit	Issue 1	
C1	26386/899	CAPACITOR-FIXED CERAMIC 100nF +/-10% 50V X7R/2C1, MULTILAYER, SURFACE-MOUNTED, SIZE 1206, NICKEL	ROHM ELECTRONICS LTD	MCH31-5C-104-KP
C2	26386/899	CAPACITOR-FIXED CERAMIC 100nF +/-10% 50V X7R/2C1, MULTILAYER, SURFACE-MOUNTED, SIZE 1206, NICKEL	ROHM ELECTRONICS LTD	MCH31-5C-104-KP
C3	26451/009	CAPACITOR-FIXED ALUMINIUM 47uF +/-20% 16V ELECTROLYTIC, SURFACE-MOUNTED, SIZE 6.6 x 6.6mm,	PANASONIC INDUSTRIAL	ECE-V-1CA-470P
C4	26386/899	CAPACITOR-FIXED CERAMIC 100nF +/-10% 50V X7R/2C1, MULTILAYER, SURFACE-MOUNTED, SIZE 1206, NICKEL	ROHM ELECTRONICS LTD	MCH31-5C-104-KP
C5	26386/899	CAPACITOR-FIXED CERAMIC 100nF +/-10% 50V X7R/2C1, MULTILAYER, SURFACE-MOUNTED, SIZE 1206, NICKEL	ROHM ELECTRONICS LTD	MCH31-5C-104-KP
C6	26451/009	CAPACITOR-FIXED ALUMINIUM 47uF +/-20% 16V ELECTROLYTIC, SURFACE-MOUNTED, SIZE 6.6 x 6.6mm,	PANASONIC INDUSTRIAL	ECE-V-1CA-470P
C7	26386/899	CAPACITOR-FIXED CERAMIC 100nF +/-10% 50V X7R/2C1, MULTILAYER, SURFACE-MOUNTED, SIZE 1206, NICKEL	ROHM ELECTRONICS LTD	MCH31-5C-104-KP
C8	26386/899	CAPACITOR-FIXED CERAMIC 100nF +/-10% 50V X7R/2C1, MULTILAYER, SURFACE-MOUNTED, SIZE 1206, NICKEL	ROHM ELECTRONICS LTD	MCH31-5C-104-KP
C9	26451/009	CAPACITOR-FIXED ALUMINIUM 47uF +/-20% 16V ELECTROLYTIC, SURFACE-MOUNTED, SIZE 6.6 x 6.6mm,	PANASONIC INDUSTRIAL	ECE-V-1CA-470P
C10	26386/899	CAPACITOR-FIXED CERAMIC 100nF +/-10% 50V X7R/2C1, MULTILAYER, SURFACE-MOUNTED, SIZE 1206, NICKEL	ROHM ELECTRONICS LTD	MCH31-5C-104-KP
C14	26386/816	CAPACITOR-FIXED CERAMIC 22pF +/-5% 50V NPO MULTILAYER, SURFACE-MOUNTED, SIZE 0805, NICKEL	ROHM ELECTRONICS LTD	MCH21-5A-220-JP
C15	26386/777	CAPACITOR-FIXED CERAMIC 47nF +/-20% 63V X7R/2C1, MULTILAYER, SURFACE-MOUNTED, SIZE 1206, NICKEL	PHILIPS	1206-2R-473-K9-BBC
C17 to C19	26386/777	CAPACITOR-FIXED CERAMIC 47nF +/-20% 63V X7R/2C1, MULTILAYER, SURFACE-MOUNTED, SIZE 1206, NICKEL	PHILIPS	1206-2R-473-K9-BBC
C20 to C29	26386/863	CAPACITOR-FIXED CERAMIC 1nF +/-10% 50V X7R/2C1, MULTILAYER, SURFACE-MOUNTED, SIZE 0805, NICKEL	ROHM ELECTRONICS LTD	MCH21-5C-102-KP
C30	26386/777	CAPACITOR-FIXED CERAMIC 47nF +/-20% 63V X7R/2C1, MULTILAYER, SURFACE-MOUNTED, SIZE 1206, NICKEL	PHILIPS	1206-2R-473-K9-BBC
C34	26386/863	CAPACITOR-FIXED CERAMIC 1nF +/-10% 50V X7R/2C1, MULTILAYER, SURFACE-MOUNTED, SIZE 0805, NICKEL	ROHM ELECTRONICS LTD	MCH21-5C-102-KP
C35	26386/863	CAPACITOR-FIXED CERAMIC 1nF +/-10% 50V X7R/2C1, MULTILAYER, SURFACE-MOUNTED, SIZE 0805, NICKEL	ROHM ELECTRONICS LTD	MCH21-5C-102-KP
C36	26343/788	CAPACITOR-FIXED CERAMIC 680pF +/-5% 50V NPO MULTILAYER, SURFACE-MOUNTED, SIZE 0805, NICKEL	ROHM ELECTRONICS LTD	MCH21-5A-681-JP
C37	26386/777	CAPACITOR-FIXED CERAMIC 47nF +/-20% 63V X7R/2C1, MULTILAYER, SURFACE-MOUNTED, SIZE 1206, NICKEL	PHILIPS	1206-2R-473-K9-BBC
C38	26386/804	CAPACITOR-FIXED CERAMIC 2.2pF +/-0.5pF 50V NPO MULTILAYER, SURFACE-MOUNTED, SIZE 0805, NICKEL	ROHM ELECTRONICS LTD	MCH21-5A-2R2-DP
C39	26343/788	CAPACITOR-FIXED CERAMIC 680pF +/-5% 50V NPO MULTILAYER, SURFACE-MOUNTED, SIZE 0805, NICKEL	ROHM ELECTRONICS LTD	MCH21-5A-681-JP
C40	26386/777	CAPACITOR-FIXED CERAMIC 47nF +/-20% 63V X7R/2C1, MULTILAYER, SURFACE-MOUNTED, SIZE 1206, NICKEL	PHILIPS	1206-2R-473-K9-BBC
C43	26343/788	CAPACITOR-FIXED CERAMIC 680pF +/-5% 50V NPO MULTILAYER, SURFACE-MOUNTED, SIZE 0805, NICKEL	ROHM ELECTRONICS LTD	MCH21-5A-681-JP

Cir. Ref.	MI part number	Description	Manufacturer	Manufacturer's part number
1st local oscillator control A7/1 (contd.)				
C44 to C46	26386/777	CAPACITOR-FIXED CERAMIC 47nF +/-20% 63V X7R/2C1, MULTILAYER, SURFACE-MOUNTED, SIZE 1206, NICKEL	PHILIPS	1206-2R-473-K9-BBC
C47	26343/788	CAPACITOR-FIXED CERAMIC 680pF +/-5% 50V NPO MULTILAYER, SURFACE-MOUNTED, SIZE 0805, NICKEL	ROHM ELECTRONICS LTD	MCH21-5A-681-JP
C48	26451/010	CAPACITOR-FIXED ALUMINIUM 100uF +/-20% 6.3V ELECTROLYTIC, SURFACE-MOUNTED, SIZE 6.6 x 6.6mm,	PANASONIC INDUSTRIAL	ECE-V-0JA-101P
D1	28349/032	DIODE SMALL-SIGNAL, SCHOTTKY, HSMS-2820... 8V 1pF 340mVf @ 1mA, MARKNG CODE C0, LOW PROFILE, SURFACE	HEWLETT-PACKARD	HSMS-2820-L31
D2	28383/910	DIODE SMALL-SIGNAL, BAS28... DUAL, 330mW 75V 250mA ELECTRICALLY ISOLATED, MARKING CODE A61 OR JT,	PHILIPS	BAS28
D3	28383/910	DIODE SMALL-SIGNAL, BAS28... DUAL, 330mW 75V 250mA ELECTRICALLY ISOLATED, MARKING CODE A61 OR JT,	PHILIPS	BAS28
IC1	28466/413	IC-DIGITAL EXCLUSIVE-OR 74AC86... 2 INPUT, QUAD, CMOS-ADVANCED, 14 PIN, SMALL-OUTLINE.	NAT. SEMICONDUCTOR	74AC86SC
IC3	28469/568	IC-DIGITAL DIVIDER SP8400... DIVIDE BY 8/9, 1.5GHz PRESCALER, PHASE NOISE < 160dBc/Hz, 3 BIT A & 9	GEC PLESSEY SEMICOND	SP8400-KG-MPES
IC4	28461/454	IC-ANALOGUE MICROWAVE-AMP MSA-0786... 4V 22mA GAIN 12.5dB @ 1GHz, 3dB BANDWIDTH DC-2GHz, BIPOLAR, 4	HEWLETT-PACKARD	MSA-0786-TR1
IC5	28469/577	IC-DIGITAL DIVIDER SP4902... DIVIDE BY 2, 2.5GHz, PRESCALER, ECL, 8 PIN, SMALL-OUTLINE.	GEC PLESSEY SEMICOND	SP4902MP8
IC6	28461/454	IC-ANALOGUE MICROWAVE-AMP MSA-0786... 4V 22mA GAIN 12.5dB @ 1GHz, 3dB BANDWIDTH DC-2GHz, BIPOLAR, 4	HEWLETT-PACKARD	MSA-0786-TR1
IC7	28469/621	IC-DIGITAL ARRAY-LOGIC L5A1579... FRACTIONAL N CONTROL CHIP, 28 BIT BINARY, TO MI CUSTOM SPEC,	LSI LOGIC LTD	L5A1579
IC8	28462/645	IC-DIGITAL FLIP-FLOP/D-TYPE 74HC174... 6 INPUT, 6 BIT, HEX, POS EDGE TRIGGER & MASTER RESET,	PHILIPS	74HC174D
L1	23642/512	INDUCTOR-FIXED 22uH +/- 5% EPOXY-MOULD, 110mA 3R7 MAX, 30 Q @ 2.5 MHz, 25 MHz SRF, SURFACE MOUNTED,	MEGGITT ELECTRONICS	3612-T-220-J
L2	23642/716	INDUCTOR-FIXED 3.3uH +/- 5% EPOXY-MOULD, 260mA 1R2 MAX, 30 Q @ 7.96 MHz, 60 MHz SRF, SURFACE MOUNTED,	MEGGITT ELECTRONICS	3612-T-3R3-J
L3	23642/512	INDUCTOR-FIXED 22uH +/- 5% EPOXY-MOULD, 110mA 3R7 MAX, 30 Q @ 2.5 MHz, 25 MHz SRF, SURFACE MOUNTED,	MEGGITT ELECTRONICS	3612-T-220-J
L4	23642/510	INDUCTOR-FIXED 0.1uH +/- 5% EPOXY-MOULD, 450mA 0R44 MAX, 28 Q @ 100 MHz, 700 MHz SRF, SURFACE	MEGGITT ELECTRONICS	3612-T-R10-J
L5	23642/510	INDUCTOR-FIXED 0.1uH +/- 5% EPOXY-MOULD, 450mA 0R44 MAX, 28 Q @ 100 MHz, 700 MHz SRF, SURFACE	MEGGITT ELECTRONICS	3612-T-R10-J
PLA	23435/188	TERMINAL CONNECTOR-PIN, 0.64mm SQUARE, 5.97mm HIGH, PCB-MOUNTING, SINGLE-ENDED, PHOSPHOR BRONZE,	BERG ELECTRONICS	75401-001
PLB	23435/188	TERMINAL CONNECTOR-PIN, 0.64mm SQUARE, 5.97mm HIGH, PCB-MOUNTING, SINGLE-ENDED, PHOSPHOR BRONZE,	BERG ELECTRONICS	75401-001
R1	24811/125	RESISTOR-FIXED METAL-FILM 10R +/- 1% 250mW 200V 50 ppm/DEG.C, SURFACE MOUNTED, SIZE MINI-MELF, (8mm	VISHAY COMPONENTS	SMM0204-10R-1%-50ppm
R2	24811/181	RESISTOR-FIXED METAL-FILM 2K21 +/- 1% 250mW 200V 50 ppm/DEG.C, SURFACE MOUNTED, SIZE MINI-MELF,	VISHAY COMPONENTS	SMM0204-2K21-1%50ppm
R4	24811/161	RESISTOR-FIXED METAL-FILM 332R +/- 1% 250mW 200V 50 ppm/DEG.C, SURFACE MOUNTED, SIZE MINI-MELF,	VISHAY COMPONENTS	SMM0204-332R-1%50ppm

Cir. Ref.	MI part number	Description	Manufacturer	Manufacturer's part number
1st local oscillator control A7/1 (contd.)				
R5	24811/153	RESISTOR-FIXED METAL-FILM 150R +/- 1% 250mW 200V 50 ppm/DEG.C, SURFACE MOUNTED, SIZE MINI-MELF,	VISHAY COMPONENTS	SMM0204-150R-1%50ppm
R6	24811/174	RESISTOR-FIXED METAL-FILM 1K1 +/- 1% 250mW 200V 50 ppm/DEG.C, SURFACE MOUNTED, SIZE MINI-MELF, (8mm	VISHAY COMPONENTS	SMM0204-1K1-1%50ppm
R7	24811/161	RESISTOR-FIXED METAL-FILM 332R +/- 1% 250mW 200V 50 ppm/DEG.C, SURFACE MOUNTED, SIZE MINI-MELF,	VISHAY COMPONENTS	SMM0204-332R-1%50ppm
R8	24811/909	RESISTOR-FIXED METAL-FILM 51R1 +/- 1% 250mW 200V 50 ppm/DEG.C, LOW-INDUCTANCE, SURFACE MOUNTED,	VISHAY COMPONENTS	SMM0204-HF-51R1-1%
R9	24811/909	RESISTOR-FIXED METAL-FILM 51R1 +/- 1% 250mW 200V 50 ppm/DEG.C, LOW-INDUCTANCE, SURFACE MOUNTED,	VISHAY COMPONENTS	SMM0204-HF-51R1-1%
R10	24811/161	RESISTOR-FIXED METAL-FILM 332R +/- 1% 250mW 200V 50 ppm/DEG.C, SURFACE MOUNTED, SIZE MINI-MELF,	VISHAY COMPONENTS	SMM0204-332R-1%50ppm
R14	24811/161	RESISTOR-FIXED METAL-FILM 332R +/- 1% 250mW 200V 50 ppm/DEG.C, SURFACE MOUNTED, SIZE MINI-MELF,	VISHAY COMPONENTS	SMM0204-332R-1%50ppm
R15 to R25	24811/173	RESISTOR-FIXED METAL-FILM 1K +/- 1% 250mW 200V 50 ppm/DEG.C, SURFACE MOUNTED, SIZE MINI-MELF, (8mm	VISHAY COMPONENTS	SMM0204-1K0-1%-50ppm
R30	24811/157	RESISTOR-FIXED METAL-FILM 221R +/- 1% 250mW 200V 50 ppm/DEG.C, SURFACE MOUNTED, SIZE MINI-MELF,	VISHAY COMPONENTS	SMM0204-221R-1%50ppm
R31 to R33	24811/153	RESISTOR-FIXED METAL-FILM 150R +/- 1% 250mW 200V 50 ppm/DEG.C, SURFACE MOUNTED, SIZE MINI-MELF,	VISHAY COMPONENTS	SMM0204-150R-1%50ppm
R35	24811/909	RESISTOR-FIXED METAL-FILM 51R1 +/- 1% 250mW 200V 50 ppm/DEG.C, LOW-INDUCTANCE, SURFACE MOUNTED,	VISHAY COMPONENTS	SMM0204-HF-51R1-1%
R36	24811/928	RESISTOR-FIXED METAL-FILM 121R +/- 1% 250mW 200V 50 ppm/DEG.C, LOW-INDUCTANCE, SURFACE MOUNTED,	VISHAY COMPONENTS	SMM0204-HF-121R-1%
R37	24811/909	RESISTOR-FIXED METAL-FILM 51R1 +/- 1% 250mW 200V 50 ppm/DEG.C, LOW-INDUCTANCE, SURFACE MOUNTED,	VISHAY COMPONENTS	SMM0204-HF-51R1-1%
R38	24811/928	RESISTOR-FIXED METAL-FILM 121R +/- 1% 250mW 200V 50 ppm/DEG.C, LOW-INDUCTANCE, SURFACE MOUNTED,	VISHAY COMPONENTS	SMM0204-HF-121R-1%
R39	24811/173	RESISTOR-FIXED METAL-FILM 1K +/- 1% 250mW 200V 50 ppm/DEG.C, SURFACE MOUNTED, SIZE MINI-MELF, (8mm	VISHAY COMPONENTS	SMM0204-1K0-1%-50ppm
R40	24811/197	RESISTOR-FIXED METAL-FILM 10K +/- 1% 250mW 200V 50 ppm/DEG.C, SURFACE MOUNTED, SIZE MINI-MELF, (8mm	VISHAY COMPONENTS	SMM0204-10K-1%50ppm
R41	24811/205	RESISTOR-FIXED METAL-FILM 22K1 +/- 1% 250mW 200V 50 ppm/DEG.C, SURFACE MOUNTED, SIZE MINI-MELF,	VISHAY COMPONENTS	SMM0204-22K1-1%50ppm
R42	24681/549	RESISTOR-NETWORK BUSSED, THICK-FILM, 22K 2% 600mW 50V 200 ppm/DEG.C, 15 RESISTORS, SURFACE MOUNTED,	VISHAY COMPONENTS	SOMC16-01-223-G-TUBE
R57	24811/173	RESISTOR-FIXED METAL-FILM 1K +/- 1% 250mW 200V 50 ppm/DEG.C, SURFACE MOUNTED, SIZE MINI-MELF, (8mm	VISHAY COMPONENTS	SMM0204-1K0-1%-50ppm
R58 to R60	24811/197	RESISTOR-FIXED METAL-FILM 10K +/- 1% 250mW 200V 50 ppm/DEG.C, SURFACE MOUNTED, SIZE MINI-MELF, (8mm	VISHAY COMPONENTS	SMM0204-10K-1%50ppm
TP1 to TP7	23435/188	TERMINAL CONNECTOR-PIN, 0:64mm SQUARE, 5.97mm HIGH, PCB-MOUNTING, SINGLE-ENDED, PHOSPHOR BRONZE,	BERG ELECTRONICS	75401-001
TR1	28457/852	TRANSISTOR PNP BIPOLAR BSR15... 60V 200MHz 300mW 600mA MARKING CODE CH/T7p, SURFACE MOUNTED,	PHILIPS	BSR15
TR2 to TR4	28457/850	TRANSISTOR NPN BIPOLAR FMMT2369... 40V 600MHz 300mW 500mA 40hFE MIN @ 10mA, MARKING CODE *1J,	PHILIPS	PMBT2369

Cir. Ref.	MI part number	Description	Manufacturer	Manufacturer's part number

1st local oscillator A8/1

When ordering, prefix circuit reference with A8/1.

	44830-112	Complete unit	Issue 2	
C1	26386/899	CAPACITOR-FIXED CERAMIC 100nF +/-10% 50V X7R/2C1, MULTILAYER, SURFACE-MOUNTED, SIZE 1206, NICKEL	ROHM ELECTRONICS LTD	MCH31-5C-104-KP
C2	26451/002	CAPACITOR-FIXED ALUMINIUM 4.7uF +/-20% 35V ELECTROLYTIC, SURFACE-MOUNTED, SIZE 4.3 x 4.3mm,	PANASONIC INDUSTRIAL	ECE-V-1VA-4R7R
C3	26451/004	CAPACITOR-FIXED ALUMINIUM 10uF +/-20% 35V ELECTROLYTIC, SURFACE-MOUNTED, SIZE 5.3 x 5.3mm,	RUBYCON CAPACITORS	35-REV-10
C4	26451/014	CAPACITOR-FIXED ALUMINIUM 220uF +/-20% 16V ELECTROLYTIC, SURFACE-MOUNTED, SIZE 10.3 x 10.3mm,	PANASONIC INDUSTRIAL	ECE-V-1E-A-221-P
C5	26451/010	CAPACITOR-FIXED ALUMINIUM 100uF +/-20% 6.3V ELECTROLYTIC, SURFACE-MOUNTED, SIZE 6.6 x 6.6mm,	PANASONIC INDUSTRIAL	ECE-V-0JA-101P
C6	26451/009	CAPACITOR-FIXED ALUMINIUM 47uF +/-20% 16V ELECTROLYTIC, SURFACE-MOUNTED, SIZE 6.6 x 6.6mm,	PANASONIC INDUSTRIAL	ECE-V-1CA-470P
C7	26451/003	CAPACITOR-FIXED ALUMINIUM 10uF +/-20% 16V ELECTROLYTIC, SURFACE-MOUNTED, SIZE 4.3 x 4.3mm,	PANASONIC INDUSTRIAL	ECE-V-1CA-100R
C8	26451/005	CAPACITOR-FIXED ALUMINIUM 22uF +/-20% 6.3V ELECTROLYTIC, SURFACE-MOUNTED, SIZE 4.3 x 4.3mm,	PANASONIC INDUSTRIAL	ECE-V-0JA-220R
C9	26386/875	CAPACITOR-FIXED CERAMIC 10nF +/-10% 50V X7R/2C1, MULTILAYER, SURFACE-MOUNTED, SIZE 0805, NICKEL	ROHM ELECTRONICS LTD	MCH21-5C-103-KP
C10 to C12	26386/899	CAPACITOR-FIXED CERAMIC 100nF +/-10% 50V X7R/2C1, MULTILAYER, SURFACE-MOUNTED, SIZE 1206, NICKEL	ROHM ELECTRONICS LTD	MCH31-5C-104-KP
C13	26386/816	CAPACITOR-FIXED CERAMIC 22pF +/-5% 50V NPO MULTILAYER, SURFACE-MOUNTED, SIZE 0805, NICKEL	ROHM ELECTRONICS LTD	MCH21-5A-220-JP
C14	26451/003	CAPACITOR-FIXED ALUMINIUM 10uF +/-20% 16V ELECTROLYTIC, SURFACE-MOUNTED, SIZE 4.3 x 4.3mm,	PANASONIC INDUSTRIAL	ECE-V-1CA-100R
C15	26585/002	CAPACITOR-FIXED POLYESTER 220nF +/-10% 25V SURFACE-MOUNTED, SIZE 2824, 4.8mm HIGH NOM,	PHILIPS	394-28224
C17	26421/128	CAPACITOR-FIXED ALUMINIUM 1000uF +/-20% 6.3V ELECTROLYTIC, RADIAL, 5mm PWP, (LOOSE OR TAPED).	PHILIPS	2222-037-50102
C18	26421/128	CAPACITOR-FIXED ALUMINIUM 1000uF +/-20% 6.3V ELECTROLYTIC, RADIAL, 5mm PWP, (LOOSE OR TAPED).	PHILIPS	2222-037-50102
C19	26386/871	CAPACITOR-FIXED CERAMIC 4.7nF +/-10% 50V X7R/2C1, MULTILAYER, SURFACE-MOUNTED, SIZE 0805, NICKEL	ROHM ELECTRONICS LTD	MCH21-5C-472-KP
C20	26386/881	CAPACITOR-FIXED CERAMIC 33nF +/-10% 50V X7R/2C1, MULTILAYER, SURFACE-MOUNTED, SIZE 1210, NICKEL	ROHM ELECTRONICS LTD	MCH32-5C-333-KP
C21	26386/875	CAPACITOR-FIXED CERAMIC 10nF +/-10% 50V X7R/2C1, MULTILAYER, SURFACE-MOUNTED, SIZE 0805, NICKEL	ROHM ELECTRONICS LTD	MCH21-5C-103-KP
C22	26585/001	CAPACITOR-FIXED POLYESTER 1uF +/-10% 63V SURFACE-MOUNTED, SIZE 7.3 x 10mm, 4.5mm HIGH NOM,	WIMA CAPACITORS LTD	SMD7.3-1uF10%-63V-TR
C23	26585/001	CAPACITOR-FIXED POLYESTER 1uF +/-10% 63V SURFACE-MOUNTED, SIZE 7.3 x 10mm, 4.5mm HIGH NOM,	WIMA CAPACITORS LTD	SMD7.3-1uF10%-63V-TR
C24	26451/004	CAPACITOR-FIXED ALUMINIUM 10uF +/-20% 35V ELECTROLYTIC, SURFACE-MOUNTED, SIZE 5.3 x 5.3mm,	RUBYCON CAPACITORS	35-REV-10
C25	26386/824	CAPACITOR-FIXED CERAMIC 100pF +/-5% 50V NP0 MULTILAYER, SURFACE-MOUNTED, SIZE 0805, NICKEL	ROHM ELECTRONICS LTD	MCH21-5A-101-JP
C26	26386/808	CAPACITOR-FIXED CERAMIC 4.7pF +/-0.5pF 50V NPO MULTILAYER, SURFACE-MOUNTED, SIZE 0805, NICKEL	ROHM ELECTRONICS LTD	MCH21-5A-4R7-DP

Cir. Ref.	MI part number	Description	Manufacturer	Manufacturer's part number
1st local oscillator A8/1 (contd.)				
C27	26386/808	CAPACITOR-FIXED CERAMIC 4.7pF +/-0.5pF 50V NPO MULTILAYER, SURFACE-MOUNTED, SIZE 0805, NICKEL	ROHM ELECTRONICS LTD	MCH21-5A-4R7-DP
C28	26386/824	CAPACITOR-FIXED CERAMIC 100pF +/-5% 50V NP0 MULTILAYER, SURFACE-MOUNTED, SIZE 0805, NICKEL	ROHM ELECTRONICS LTD	MCH21-5A-101-JP
C29	26386/824	CAPACITOR-FIXED CERAMIC 100pF +/-5% 50V NP0 MULTILAYER, SURFACE-MOUNTED, SIZE 0805, NICKEL	ROHM ELECTRONICS LTD	MCH21-5A-101-JP
C34 to C44	26386/899	CAPACITOR-FIXED CERAMIC 100nF +/-10% 50V X7R/2C1, MULTILAYER, SURFACE-MOUNTED, SIZE 1206, NICKEL	ROHM ELECTRONICS LTD	MCH31-5C-104-KP
D1	28371/735	DIODE ZENER, BZX84-C8V2... 350mW 8.2V 5% 250mA MARKING CODE Z7, SURFACE MOUNTED, SOT-23, (8mm	PHILIPS	BZX84-C8V2
D2	28624/136	LED RED, SIZE T1, 3mm DIA, HLMP-1301... 2.4 Vf TYP, 90 mA If MAX, 2.5 mcd @ 10mA - 60 DEG,	HEWLETT-PACKARD	HLMP-1301
D3	28371/443	DIODE ZENER, BZX84-C5V6... 350mW 5.6V 5% 250mA MARKING CODE Z3, SURFACE MOUNTED, SOT-23, (8mm	PHILIPS	BZX84-C5V6
D4	28372/215	DIODE ZENER, BZX84-C12... 350mW 12V 5% 250mA MARKING CODE Y2, SURFACE MOUNTED, SOT-23, (8mm	PHILIPS	BZX84-C12 (Y2)
IC1	28461/792	IC-ANALOGUE VOLTAGE-REGULATOR LM317L... 32V 100mA POSITIVE ADJUSTABLE, LINEAR, MONOLITHIC, 8 PIN,	NAT. SEMICONDUCTOR	LM317LM
IC2	28461/780	IC-ANALOGUE VOLTAGE-REGULATOR 79L05AC... 5V 100mA NEGATIVE, LINEAR, 5% REGULATION, MONOLITHIC, 8	NAT. SEMICONDUCTOR	LM79L05ACM
IC5	28462/146	IC-DIGITAL FLIP-FLOP/D-TYPE 74AC74... 2 BIT, DUAL, POS EDGE TRIGGER, PLUS SET & CLEAR, CMOS-ADVANCED,	NAT. SEMICONDUCTOR	74AC74SC
IC6	28466/239	IC-DIGITAL NOR-GATE 74AC02... 2 INPUT, QUAD, CMOS-ADVANCED, 14 PIN, SMALL-OUTLINE.	NAT. SEMICONDUCTOR	74AC02SC
IC7	28462/146	IC-DIGITAL FLIP-FLOP/D-TYPE 74AC74... 2 BIT, DUAL, POS EDGE TRIGGER, PLUS SET & CLEAR, CMOS-ADVANCED,	NAT. SEMICONDUCTOR	74AC74SC
IC8	28462/146	IC-DIGITAL FLIP-FLOP/D-TYPE 74AC74... 2 BIT, DUAL, POS EDGE TRIGGER, PLUS SET & CLEAR, CMOS-ADVANCED,	NAT. SEMICONDUCTOR	74AC74SC
IC9	28466/394	IC-DIGITAL NAND-GATE 74AC00... 2 INPUT, QUAD, CMOS-ADVANCED, 14 PIN, SMALL-OUTLINE.	NAT. SEMICONDUCTOR	74AC00SC
IC10	28461/413	IC-ANALOGUE OPERATIONAL AMP TL074... QUAD, JFET INPUT, LOW NOISE, SLEW RATE 8V/uS MIN, GAIN	MOTOROLA INC.	TL074CD
IC11	28461/845	IC-ANALOGUE SWITCH 74HC4316... QUAD, BILATERAL, WITH COMMON ENABLE, CMOS-H/SPEED, 16 PIN,	PHILIPS	74HC4316D
IC12	28461/520	IC-ANALOGUE OPERATIONAL AMP LT1028... SINGLE, 18V NOISE VOLTAGE DENSITY 1.9nV, SLEW-RATE 15V/uS TYP,	LINEAR TECHNOLOGY	LT1028CS8
IC13	28461/447	IC-ANALOGUE MICROWAVE-AMP MSA-0886... 7.8V 36mA GAIN 22.5dB @1GHz, 25dB BNDWIDTH DC-5GHz, BIPOLAR,	HEWLETT-PACKARD	MSA-0886-TR1
IC14	28461/447	IC-ANALOGUE MICROWAVE-AMP MSA-0886... 7.8V 36mA GAIN 22.5dB @1GHz, 25dB BNDWIDTH DC-5GHz, BIPOLAR,	HEWLETT-PACKARD	MSA-0886-TR1
IC15	28461/454	IC-ANALOGUE MICROWAVE-AMP MSA-0786... 4V 22mA GAIN 12.5dB @ 1GHz, 3dB BANDWIDTH DC-2GHz, BIPOLAR, 4	HEWLETT-PACKARD	MSA-0786-TR1
L1 to L4	23642/719	INDUCTOR-FIXED 220uH +/- 5% EPOXY-MOULD, 50mA 21R MAX, 20 Q @ 0.796 MHz, 7 MHz SRF, SURFACE MOUNTED,	MEGGITT ELECTRONICS	3612-T-221-J
L5	23642/524	INDUCTOR-FIXED 1mH +/- 10% EPOXY-MOULD, 30mA 40R MAX, 30 Q @ 0.252 MHz, 2.5 MHz SRF, SURFACE	MEGGITT ELECTRONICS	3613-T-102-K

Cir. Ref.	MI part number	Description	Manufacturer	Manufacturer's part number
1st local oscillator A8/1 (contd.)				
L6	23642/524	INDUCTOR-FIXED 1mH +/- 10% EPOXY-MOULD, 30mA 40R MAX, 30 Q @ 0.252 MHz, 2.5 MHz SRF, SURFACE	MEGGITT ELECTRONICS	3613-T-102-K
L7 to L9	23642/535	INDUCTOR-FIXED 1uH +/- 5% EPOXY-MOULD, 400mA 0R7 MAX, 30 Q @ 7.96 MHz, 120 MHz SRF, SURFACE	MEGGITT ELECTRONICS	3612-T-1R0-J
PLA to PLD	23435/188	TERMINAL CONNECTOR-PIN, 0.64mm SQUARE, 5.97mm HIGH, PCB-MOUNTING, SINGLE-ENDED, PHOSPHOR BRONZE,	BERG ELECTRONICS	75401-001
R1	24811/161	RESISTOR-FIXED METAL-FILM 332R +/- 1% 250mW 200V 50 ppm/DEG.C, SURFACE MOUNTED, SIZE MINI-MELF,	VISHAY COMPONENTS	SMM0204-332R-1%50ppm
R2	24811/194	RESISTOR-FIXED METAL-FILM 7K5 +/- 1% 250mW 200V 50 ppm/DEG.C, SURFACE MOUNTED, SIZE MINI-MELF, (8mm	VISHAY COMPONENTS	SMM0204-7K5-1%50ppm
R3	24811/149	RESISTOR-FIXED METAL-FILM 100R +/- 1% 250mW 200V 50 ppm/DEG.C, SURFACE MOUNTED, SIZE MINI-MELF,	VISHAY COMPONENTS	SMM0204-100R-1%50ppm
R4	24811/161	RESISTOR-FIXED METAL-FILM 332R +/- 1% 250mW 200V 50 ppm/DEG.C, SURFACE MOUNTED, SIZE MINI-MELF,	VISHAY COMPONENTS	SMM0204-332R-1%50ppm
R5	24811/161	RESISTOR-FIXED METAL-FILM 332R +/- 1% 250mW 200V 50 ppm/DEG.C, SURFACE MOUNTED, SIZE MINI-MELF,	VISHAY COMPONENTS	SMM0204-332R-1%50ppm
R6	24811/206	RESISTOR-FIXED METAL-FILM 24K3 +/- 1% 250mW 200V 50 ppm/DEG.C, SURFACE MOUNTED, SIZE MINI-MELF,	VISHAY COMPONENTS	SMM0204-24K3-1%50ppm
R7	24811/197	RESISTOR-FIXED METAL-FILM 10K +/- 1% 250mW 200V 50 ppm/DEG.C, SURFACE MOUNTED, SIZE MINI-MELF, (8mm	VISHAY COMPONENTS	SMM0204-10K-1%50ppm
R8	24811/216	RESISTOR-FIXED METAL-FILM 61K9 +/- 1% 250mW 200V 50 ppm/DEG.C, SURFACE MOUNTED, SIZE MINI-MELF,	VISHAY COMPONENTS	SMM0204-61K9-1%50ppm
R9	24811/226	RESISTOR-FIXED METAL-FILM 162K +/- 1% 250mW 200V 50 ppm/DEG.C, SURFACE MOUNTED, SIZE MINI-MELF,	VISHAY COMPONENTS	SMM0204-162K-1%50ppm
R10	24811/212	RESISTOR-FIXED METAL-FILM 43K2 +/- 1% 250mW 200V 50 ppm/DEG.C, SURFACE MOUNTED, SIZE MINI-MELF,	VISHAY COMPONENTS	SMM0204-43K2-1%50ppm
R11	24811/215	RESISTOR-FIXED METAL-FILM 56K2 +/- 1% 250mW 200V 50 ppm/DEG.C, SURFACE MOUNTED, SIZE MINI-MELF,	VISHAY COMPONENTS	SMM0204-56K2-1%50ppm
R12	24811/201	RESISTOR-FIXED METAL-FILM 15K +/- 1% 250mW 200V 50 ppm/DEG.C, SURFACE MOUNTED, SIZE MINI-MELF, (8mm	VISHAY COMPONENTS	SMM0204-15K-1%50ppm
R13	24811/197	RESISTOR-FIXED METAL-FILM 10K +/- 1% 250mW 200V 50 ppm/DEG.C, SURFACE MOUNTED, SIZE MINI-MELF, (8mm	VISHAY COMPONENTS	SMM0204-10K-1%50ppm
R14	24811/142	RESISTOR-FIXED METAL-FILM 51R1 +/- 1% 250mW 200V 50 ppm/DEG.C, SURFACE MOUNTED, SIZE MINI-MELF,	VISHAY COMPONENTS	SMM0204-51R1-1%50ppm
R15	24811/185	RESISTOR-FIXED METAL-FILM 3K32 +/- 1% 250mW 200V 50 ppm/DEG.C, SURFACE MOUNTED, SIZE MINI-MELF,	VISHAY COMPONENTS	SMM0204-3K32-1%50ppm
R16	24811/189	RESISTOR-FIXED METAL-FILM 4K75 +/- 1% 250mW 200V 50 ppm/DEG.C, SURFACE MOUNTED, SIZE MINI-MELF,	VISHAY COMPONENTS	SMM0204-4K75-1%50ppm
R17	24811/137	RESISTOR-FIXED METAL-FILM 33R2 +/- 1% 250mW 200V 50 ppm/DEG.C, SURFACE MOUNTED, SIZE MINI-MELF,	VISHAY COMPONENTS	SMM0204-33R2-1%50ppm
R18	24811/161	RESISTOR-FIXED METAL-FILM 332R +/- 1% 250mW 200V 50 ppm/DEG.C, SURFACE MOUNTED, SIZE MINI-MELF,	VISHAY COMPONENTS	SMM0204-332R-1%50ppm
R19	24811/137	RESISTOR-FIXED METAL-FILM 33R2 +/- 1% 250mW 200V 50 ppm/DEG.C, SURFACE MOUNTED, SIZE MINI-MELF,	VISHAY COMPONENTS	SMM0204-33R2-1%50ppm
R20	24811/171	RESISTOR-FIXED METAL-FILM 825R +/- 1% 250mW 200V 50 ppm/DEG.C, SURFACE MOUNTED, SIZE MINI-MELF,	VISHAY COMPONENTS	SMM0204-825R-1%50ppm
R21 to R24	24811/175	RESISTOR-FIXED METAL-FILM 1K21 +/- 1% 250mW 200V 50 ppm/DEG.C, SURFACE MOUNTED, SIZE MINI-MELF,	VISHAY COMPONENTS	SMM0204-1K21-1%50ppm

1st local oscillator A8/1 (contd.)

Cir. Ref.	MI part number	Description	Manufacturer	Manufacturer's part number
R25 to R27	24811/213	RESISTOR-FIXED METAL-FILM 47K5 +/- 1% 250mW 200V 50 ppm/DEG.C, SURFACE MOUNTED, SIZE MINI-MELF,	VISHAY COMPONENTS	SMM0204-47K5-1%50ppm
R28	24811/245	RESISTOR-FIXED METAL-FILM 1M +/- 1% 250mW 200V 50 ppm/DEG.C, SURFACE MOUNTED, SIZE MINI-MELF, (8mm	VISHAY COMPONENTS	SMM0204-1M0-1%50ppm
R29	24811/175	RESISTOR-FIXED METAL-FILM 1K21 +/- 1% 250mW 200V 50 ppm/DEG.C, SURFACE MOUNTED, SIZE MINI-MELF,	VISHAY COMPONENTS	SMM0204-1K21-1%50ppm
R30	24811/197	RESISTOR-FIXED METAL-FILM 10K +/- 1% 250mW 200V 50 ppm/DEG.C, SURFACE MOUNTED, SIZE MINI-MELF, (8mm	VISHAY COMPONENTS	SMM0204-10K-1%50ppm
R31	24811/199	RESISTOR-FIXED METAL-FILM 12K1 +/- 1% 250mW 200V 50 ppm/DEG.C, SURFACE MOUNTED, SIZE MINI-MELF,	VISHAY COMPONENTS	SMM0204-12K1-1%50ppm
R32 to R35	24811/197	RESISTOR-FIXED METAL-FILM 10K +/- 1% 250mW 200V 50 ppm/DEG.C, SURFACE MOUNTED, SIZE MINI-MELF, (8mm	VISHAY COMPONENTS	SMM0204-10K-1%50ppm
R36	24811/137	RESISTOR-FIXED METAL-FILM 33R2 +/- 1% 250mW 200V 50 ppm/DEG.C, SURFACE MOUNTED, SIZE MINI-MELF,	VISHAY COMPONENTS	SMM0204-33R2-1%50ppm
R37	24811/137	RESISTOR-FIXED METAL-FILM 33R2 +/- 1% 250mW 200V 50 ppm/DEG.C, SURFACE MOUNTED, SIZE MINI-MELF,	VISHAY COMPONENTS	SMM0204-33R2-1%50ppm
R38	24811/161	RESISTOR-FIXED METAL-FILM 332R +/- 1% 250mW 200V 50 ppm/DEG.C, SURFACE MOUNTED, SIZE MINI-MELF,	VISHAY COMPONENTS	SMM0204-332R-1%50ppm
R39	24811/157	RESISTOR-FIXED METAL-FILM 221R +/- 1% 250mW 200V 50 ppm/DEG.C, SURFACE MOUNTED, SIZE MINI-MELF,	VISHAY COMPONENTS	SMM0204-221R-1%50ppm
R40	24811/149	RESISTOR-FIXED METAL-FILM 100R +/- 1% 250mW 200V 50 ppm/DEG.C, SURFACE MOUNTED, SIZE MINI-MELF,	VISHAY COMPONENTS	SMM0204-100R-1%50ppm
R41	24811/148	RESISTOR-FIXED METAL-FILM 90R9 +/- 1% 250mW 200V 50 ppm/DEG.C, SURFACE MOUNTED, SIZE MINI-MELF,	VISHAY COMPONENTS	SMM0204-90R9-1%50ppm
R42	24811/125	RESISTOR-FIXED METAL-FILM 10R +/- 1% 250mW 200V 50 ppm/DEG.C, SURFACE MOUNTED, SIZE MINI-MELF, (8mm	VISHAY COMPONENTS	SMM0204-10R-1%-50ppm
R44	24811/153	RESISTOR-FIXED METAL-FILM 150R +/- 1% 250mW 200V 50 ppm/DEG.C, SURFACE MOUNTED, SIZE MINI-MELF,	VISHAY COMPONENTS	SMM0204-150R-1%50ppm
R45	24811/901	RESISTOR-FIXED METAL-FILM 10R +/- 1% 250mW 200V 50 ppm/DEG.C, LOW-INDUCTANCE, SURFACE MOUNTED, SIZE	VISHAY COMPONENTS	SMM0204-HF-10R-1%
R46	24811/901	RESISTOR-FIXED METAL-FILM 10R +/- 1% 250mW 200V 50 ppm/DEG.C, LOW-INDUCTANCE, SURFACE MOUNTED, SIZE	VISHAY COMPONENTS	SMM0204-HF-10R-1%
R47	24811/923	RESISTOR-FIXED METAL-FILM 68R1 +/- 1% 250mW 200V 50 ppm/DEG.C, LOW-INDUCTANCE, SURFACE MOUNTED,	VISHAY COMPONENTS	SMM0204-HF-68R1-1%
R48	24811/911	RESISTOR-FIXED METAL-FILM 75R +/- 1% 250mW 200V 50 ppm/DEG.C, LOW-INDUCTANCE, SURFACE MOUNTED, SIZE	VISHAY COMPONENTS	SMM0204-HF-75R0-1%
R49	24811/901	RESISTOR-FIXED METAL-FILM 10R +/- 1% 250mW 200V 50 ppm/DEG.C, LOW-INDUCTANCE, SURFACE MOUNTED, SIZE	VISHAY COMPONENTS	SMM0204-HF-10R-1%
R50	24811/151	RESISTOR-FIXED METAL-FILM 121R +/- 1% 250mW 200V 50 ppm/DEG.C, SURFACE MOUNTED, SIZE MINI-MELF,	VISHAY COMPONENTS	SMM0204-121R-1%50ppm
R51	24811/161	RESISTOR-FIXED METAL-FILM 332R +/- 1% 250mW 200V 50 ppm/DEG.C, SURFACE MOUNTED, SIZE MINI-MELF,	VISHAY COMPONENTS	SMM0204-332R-1%50ppm
R52	24811/915	RESISTOR-FIXED METAL-FILM 150R +/- 1% 250mW 200V 50 ppm/DEG.C, LOW-INDUCTANCE, SURFACE MOUNTED,	VISHAY COMPONENTS	SMM0204-HF-150R-1%
R53	24811/906	RESISTOR-FIXED METAL-FILM 36R5 +/- 1% 250mW 200V 50 ppm/DEG.C, LOW-INDUCTANCE, SURFACE MOUNTED,	VISHAY COMPONENTS	SMM0204-HF-36R5-1%
R54	24811/915	RESISTOR-FIXED METAL-FILM 150R +/- 1% 250mW 200V 50 ppm/DEG.C, LOW-INDUCTANCE, SURFACE MOUNTED,	VISHAY COMPONENTS	SMM0204-HF-150R-1%
R55	24811/197	RESISTOR-FIXED METAL-FILM 10K +/- 1% 250mW 200V 50 ppm/DEG.C, SURFACE MOUNTED, SIZE MINI-MELF, (8mm	VISHAY COMPONENTS	SMM0204-10K-1%50ppm
R56 to R61	24811/125	RESISTOR-FIXED METAL-FILM 10R +/- 1% 250mW 200V 50 ppm/DEG.C, SURFACE MOUNTED, SIZE MINI-MELF, (8mm	VISHAY COMPONENTS	SMM0204-10R-1%-50ppm

Cir. Ref.	MI part number	Description	Manufacturer	Manufacturer's part number
1st local oscillator A8/1 (contd.)				
R62	24811/175	RESISTOR-FIXED METAL-FILM 1K21 +/- 1% 250mW 200V 50 ppm/DEG.C, SURFACE MOUNTED, SIZE MINI-MELF,	VISHAY COMPONENTS	SMM0204-1K21-1%50ppm
TR1	28455/302	TRANSISTOR NPN BIPOLAR BCX54... 45V 130MHz 1W 1A 40hFE MIN @ 150mA, MARKING CODE BA, SURFACE	PHILIPS	BCX54
TR2	28453/829	TRANSISTOR NPN BIPOLAR BC848B... 30V 200MHz 200mW 100mA 290hFE @ 2mA, NOISE 2dB @ 1KHz, MARKING CODE	PHILIPS	BC848B
TR3	28433/828	TRANSISTOR PNP BIPOLAR BC858B... 30V 150MHz 200mW 100mA 220hFE MIN @ 2mA, MARKING CODE 3K, SURFACE	PHILIPS	BC858B
TR4	28457/851	TRANSISTOR NPN BIPOLAR BFS17... 15V 1.3GHz 250mW 50mA 20hFE MIN @ 2mA, MARKING CODE E1, SURFACE	PHILIPS	BFS17
TR5	28453/829	TRANSISTOR NPN BIPOLAR BC848B... 30V 200MHz 200mW 100mA 290hFE @ 2mA, NOISE 2dB @ 1KHz, MARKING CODE	PHILIPS	BC848B
TR6	28453/829	TRANSISTOR NPN BIPOLAR BC848B... 30V 200MHz 200mW 100mA 290hFE @ 2mA, NOISE 2dB @ 1KHz, MARKING CODE	PHILIPS	BC848B
TR7	28459/084	TRANSISTOR N-CHANNEL-ENHANCE MOSFET BST82... 80V 300mW 175mA 7R SWITCH ON & OFF <10nS, MARKING CODE	PHILIPS	BST82(TAPE & REEL)

2nd & 3rd local oscillator A9/1

When ordering, prefix circuit reference with A9/1.

Cir. Ref.	MI part number	Description	Manufacturer	Manufacturer's part number
	44830-097	Complete unit	Issue 5	
C1	26451/014	CAPACITOR-FIXED ALUMINIUM 220uF +/-20% 16V ELECTROLYTIC, SURFACE-MOUNTED, SIZE 10.3 x 10.3mm,	PANASONIC INDUSTRIAL	ECE-V-1E-A-221-P
C2	26421/128	CAPACITOR-FIXED ALUMINIUM 1000uF +/-20% 6.3V ELECTROLYTIC, RADIAL, 5mm PWP, (LOOSE OR TAPED).	PHILIPS	2222-037-50102
C3	26451/014	CAPACITOR-FIXED ALUMINIUM 220uF +/-20% 16V ELECTROLYTIC, SURFACE-MOUNTED, SIZE 10.3 x 10.3mm,	PANASONIC INDUSTRIAL	ECE-V-1E-A-221-P
C4	26451/006	CAPACITOR-FIXED ALUMINIUM 22uF +/-20% 16V ELECTROLYTIC, SURFACE-MOUNTED, SIZE 5.3 x 5.3mm,	RUBYCON CAPACITORS	16-REV-22
C5	26451/003	CAPACITOR-FIXED ALUMINIUM 10uF +/-20% 16V ELECTROLYTIC, SURFACE-MOUNTED, SIZE 4.3 x 4.3mm,	PANASONIC INDUSTRIAL	ECE-V-1CA-100R
C6	26451/008	CAPACITOR-FIXED ALUMINIUM 47uF +/-20% 6.3V ELECTROLYTIC, SURFACE-MOUNTED, SIZE 5.3 x 5.3mm,	PANASONIC INDUSTRIAL	ECE-V-0JA-470P
C7	26386/863	CAPACITOR-FIXED CERAMIC 1nF +/-10% 50V X7R/2C1, MULTILAYER, SURFACE-MOUNTED, SIZE 0805, NICKEL	ROHM ELECTRONICS LTD	MCH21-5C-102-KP
C8	26386/986	CAPACITOR-FIXED CERAMIC 1.8pF +/-0.1pF 50V 60 ppm/DEG.C, HIGH-Q, SINGLELAYER, SURFACE-MOUNTED,	AVX LTD	0805-5K-1R8-BAW-TR
C9	26386/875	CAPACITOR-FIXED CERAMIC 10nF +/-10% 50V X7R/2C1, MULTILAYER, SURFACE-MOUNTED, SIZE 0805, NICKEL	ROHM ELECTRONICS LTD	MCH21-5C-103-KP
C10	26386/899	CAPACITOR-FIXED CERAMIC 100nF +/-10% 50V X7R/2C1, MULTILAYER, SURFACE-MOUNTED, SIZE 1206, NICKEL	ROHM ELECTRONICS LTD	MCH31-5C-104-KP
C11	26386/824	CAPACITOR-FIXED CERAMIC 100pF +/-5% 50V NP0 MULTILAYER, SURFACE-MOUNTED, SIZE 0805, NICKEL	ROHM ELECTRONICS LTD	MCH21-5A-101-JP
C12	26386/808	CAPACITOR-FIXED CERAMIC 4.7pF +/-0.5pF 50V NPO MULTILAYER, SURFACE-MOUNTED, SIZE 0805, NICKEL	ROHM ELECTRONICS LTD	MCH21-5A-4R7-DP
C13	26386/863	CAPACITOR-FIXED CERAMIC 1nF +/-10% 50V X7R/2C1, MULTILAYER, SURFACE-MOUNTED, SIZE 0805, NICKEL	ROHM ELECTRONICS LTD	MCH21-5C-102-KP
C14	26386/824	CAPACITOR-FIXED CERAMIC 100pF +/-5% 50V NP0 MULTILAYER, SURFACE-MOUNTED, SIZE 0805, NICKEL	ROHM ELECTRONICS LTD	MCH21-5A-101-JP
C15	26386/875	CAPACITOR-FIXED CERAMIC 10nF +/-10% 50V X7R/2C1, MULTILAYER, SURFACE-MOUNTED, SIZE 0805, NICKEL	ROHM ELECTRONICS LTD	MCH21-5C-103-KP
C16	26386/808	CAPACITOR-FIXED CERAMIC 4.7pF +/-0.5pF 50V NPO MULTILAYER, SURFACE-MOUNTED, SIZE 0805, NICKEL	ROHM ELECTRONICS LTD	MCH21-5A-4R7-DP
C17	26386/808	CAPACITOR-FIXED CERAMIC 4.7pF +/-0.5pF 50V NPO MULTILAYER, SURFACE-MOUNTED, SIZE 0805, NICKEL	ROHM ELECTRONICS LTD	MCH21-5A-4R7-DP
C18	26386/875	CAPACITOR-FIXED CERAMIC 10nF +/-10% 50V X7R/2C1, MULTILAYER, SURFACE-MOUNTED, SIZE 0805, NICKEL	ROHM ELECTRONICS LTD	MCH21-5C-103-KP
C19	26386/824	CAPACITOR-FIXED CERAMIC 100pF +/-5% 50V NP0 MULTILAYER, SURFACE-MOUNTED, SIZE 0805, NICKEL	ROHM ELECTRONICS LTD	MCH21-5A-101-JP
C23	26386/863	CAPACITOR-FIXED CERAMIC 1nF +/-10% 50V X7R/2C1, MULTILAYER, SURFACE-MOUNTED, SIZE 0805, NICKEL	ROHM ELECTRONICS LTD	MCH21-5C-102-KP
C24	26386/863	CAPACITOR-FIXED CERAMIC 1nF +/-10% 50V X7R/2C1, MULTILAYER, SURFACE-MOUNTED, SIZE 0805, NICKEL	ROHM ELECTRONICS LTD	MCH21-5C-102-KP
C25 to C27	26386/899	CAPACITOR-FIXED CERAMIC 100nF +/-10% 50V X7R/2C1, MULTILAYER, SURFACE-MOUNTED, SIZE 1206, NICKEL	ROHM ELECTRONICS LTD	MCH31-5C-104-KP
C28	26451/010	CAPACITOR-FIXED ALUMINIUM 100uF +/-20% 6.3V ELECTROLYTIC, SURFACE-MOUNTED, SIZE 6.6 x 6.6mm,	PANASONIC INDUSTRIAL	ECE-V-0JA-101P

Cir. Ref.	MI part number	Description	Manufacturer	Manufacturer's part number
2nd & 3rd local oscillator A9/1 (contd.)				
C29	26386/863	CAPACITOR-FIXED CERAMIC 1nF +/-10% 50V X7R/2C1, MULTILAYER, SURFACE-MOUNTED, SIZE 0805, NICKEL	ROHM ELECTRONICS LTD	MCH21-5C-102-KP
C30 to C32	26386/899	CAPACITOR-FIXED CERAMIC 100nF +/-10% 50V X7R/2C1, MULTILAYER, SURFACE-MOUNTED, SIZE 1206, NICKEL	ROHM ELECTRONICS LTD	MCH31-5C-104-KP
C33	26386/863	CAPACITOR-FIXED CERAMIC 1nF +/-10% 50V X7R/2C1, MULTILAYER, SURFACE-MOUNTED, SIZE 0805, NICKEL	ROHM ELECTRONICS LTD	MCH21-5C-102-KP
C34	26451/005	CAPACITOR-FIXED ALUMINIUM 22uF +/-20% 6.3V ELECTROLYTIC, SURFACE-MOUNTED, SIZE 4.3 x 4.3mm,	PANASONIC INDUSTRIAL	ECE-V-0JA-220R
C35	26585/003	CAPACITOR-FIXED POLYESTER 470nF +/-10% 25V SURFACE-MOUNTED, SIZE 7.3 x 9mm, 4.8mm HIGH NOM,	PHILIPS	394-28474
C36	26386/899	CAPACITOR-FIXED CERAMIC 100nF +/-10% 50V X7R/2C1, MULTILAYER, SURFACE-MOUNTED, SIZE 1206, NICKEL	ROHM ELECTRONICS LTD	MCH31-5C-104-KP
C37	26386/899	CAPACITOR-FIXED CERAMIC 100nF +/-10% 50V X7R/2C1, MULTILAYER, SURFACE-MOUNTED, SIZE 1206, NICKEL	ROHM ELECTRONICS LTD	MCH31-5C-104-KP
C38	26343/767	CAPACITOR-FIXED CERAMIC 10pF +/-5% 50V NPO MULTILAYER, SURFACE-MOUNTED, SIZE 0805, NICKEL	ROHM ELECTRONICS LTD	MCH21-5A-100-DP
C39	26386/899	CAPACITOR-FIXED CERAMIC 100nF +/-10% 50V X7R/2C1, MULTILAYER, SURFACE-MOUNTED, SIZE 1206, NICKEL	ROHM ELECTRONICS LTD	MCH31-5C-104-KP
C40	26386/899	CAPACITOR-FIXED CERAMIC 100nF +/-10% 50V X7R/2C1, MULTILAYER, SURFACE-MOUNTED, SIZE 1206, NICKEL	ROHM ELECTRONICS LTD	MCH31-5C-104-KP
C41	26386/863	CAPACITOR-FIXED CERAMIC 1nF +/-10% 50V X7R/2C1, MULTILAYER, SURFACE-MOUNTED, SIZE 0805, NICKEL	ROHM ELECTRONICS LTD	MCH21-5C-102-KP
C42	26386/863	CAPACITOR-FIXED CERAMIC 1nF +/-10% 50V X7R/2C1, MULTILAYER, SURFACE-MOUNTED, SIZE 0805, NICKEL	ROHM ELECTRONICS LTD	MCH21-5C-102-KP
C43	26386/899	CAPACITOR-FIXED CERAMIC 100nF +/-10% 50V X7R/2C1, MULTILAYER, SURFACE-MOUNTED, SIZE 1206, NICKEL	ROHM ELECTRONICS LTD	MCH31-5C-104-KP
C44	26386/875	CAPACITOR-FIXED CERAMIC 10nF +/-10% 50V X7R/2C1, MULTILAYER, SURFACE-MOUNTED, SIZE 0805, NICKEL	ROHM ELECTRONICS LTD	MCH21-5C-103-KP
C45	26386/875	CAPACITOR-FIXED CERAMIC 10nF +/-10% 50V X7R/2C1, MULTILAYER, SURFACE-MOUNTED, SIZE 0805, NICKEL	ROHM ELECTRONICS LTD	MCH21-5C-103-KP
C46	26386/863	CAPACITOR-FIXED CERAMIC 1nF +/-10% 50V X7R/2C1, MULTILAYER, SURFACE-MOUNTED, SIZE 0805, NICKEL	ROHM ELECTRONICS LTD	MCH21-5C-102-KP
C47	26386/899	CAPACITOR-FIXED CERAMIC 100nF +/-10% 50V X7R/2C1, MULTILAYER, SURFACE-MOUNTED, SIZE 1206, NICKEL	ROHM ELECTRONICS LTD	MCH31-5C-104-KP
C48	26386/899	CAPACITOR-FIXED CERAMIC 100nF +/-10% 50V X7R/2C1, MULTILAYER, SURFACE-MOUNTED, SIZE 1206, NICKEL	ROHM ELECTRONICS LTD	MCH31-5C-104-KP
C49	26386/875	CAPACITOR-FIXED CERAMIC 10nF +/-10% 50V X7R/2C1, MULTILAYER, SURFACE-MOUNTED, SIZE 0805, NICKEL	ROHM ELECTRONICS LTD	MCH21-5C-103-KP
C50	26386/808	CAPACITOR-FIXED CERAMIC 4.7pF +/-0.5pF 50V NPO MULTILAYER, SURFACE-MOUNTED, SIZE 0805, NICKEL	ROHM ELECTRONICS LTD	MCH21-5A-4R7-DP
C51	26386/899	CAPACITOR-FIXED CERAMIC 100nF +/-10% 50V X7R/2C1, MULTILAYER, SURFACE-MOUNTED, SIZE 1206, NICKEL	ROHM ELECTRONICS LTD	MCH31-5C-104-KP
C52	26386/899	CAPACITOR-FIXED CERAMIC 100nF +/-10% 50V X7R/2C1, MULTILAYER, SURFACE-MOUNTED, SIZE 1206, NICKEL	ROHM ELECTRONICS LTD	MCH31-5C-104-KP
C53	26386/875	CAPACITOR-FIXED CERAMIC 10nF +/-10% 50V X7R/2C1, MULTILAYER, SURFACE-MOUNTED, SIZE 0805, NICKEL	ROHM ELECTRONICS LTD	MCH21-5C-103-KP
C54	26386/899	CAPACITOR-FIXED CERAMIC 100nF +/-10% 50V X7R/2C1, MULTILAYER, SURFACE-MOUNTED, SIZE 1206, NICKEL	ROHM ELECTRONICS LTD	MCH31-5C-104-KP
C55	26386/875	CAPACITOR-FIXED CERAMIC 10nF +/-10% 50V X7R/2C1, MULTILAYER, SURFACE-MOUNTED, SIZE 0805, NICKEL	ROHM ELECTRONICS LTD	MCH21-5C-103-KP
C56	26386/899	CAPACITOR-FIXED CERAMIC 100nF +/-10% 50V X7R/2C1, MULTILAYER, SURFACE-MOUNTED, SIZE 1206, NICKEL	ROHM ELECTRONICS LTD	MCH31-5C-104-KP

Cir. Ref.	MI part number	Description	Manufacturer	Manufacturer's part number
2nd & 3rd local oscillator A9/1 (contd.)				
C57	26386/875	CAPACITOR-FIXED CERAMIC 10nF +/-10% 50V X7R/2C1, MULTILAYER, SURFACE-MOUNTED, SIZE 0805, NICKEL	ROHM ELECTRONICS LTD	MCH21-5C-103-KP
C58	26386/899	CAPACITOR-FIXED CERAMIC 100nF +/-10% 50V X7R/2C1, MULTILAYER, SURFACE-MOUNTED, SIZE 1206, NICKEL	ROHM ELECTRONICS LTD	MCH31-5C-104-KP
C59	26386/817	CAPACITOR-FIXED CERAMIC 27pF +/-5% 50V NP0 MULTILAYER, SURFACE-MOUNTED, SIZE 0805, NICKEL	ROHM ELECTRONICS LTD	MCH21-5A-270-JP
C60	26386/863	CAPACITOR-FIXED CERAMIC 1nF +/-10% 50V X7R/2C1, MULTILAYER, SURFACE-MOUNTED, SIZE 0805, NICKEL	ROHM ELECTRONICS LTD	MCH21-5C-102-KP
C61	26386/820	CAPACITOR-FIXED CERAMIC 47pF +/-5% 50V NP0 MULTILAYER, SURFACE-MOUNTED, SIZE 0805, NICKEL	ROHM ELECTRONICS LTD	MCH21-5A-470-JP
C62	26386/824	CAPACITOR-FIXED CERAMIC 100pF +/-5% 50V NP0 MULTILAYER, SURFACE-MOUNTED, SIZE 0805, NICKEL	ROHM ELECTRONICS LTD	MCH21-5A-101-JP
C63	26451/010	CAPACITOR-FIXED ALUMINIUM 100uF +/-20% 6.3V ELECTROLYTIC, SURFACE-MOUNTED, SIZE 6.6 x 6.6mm,	PANASONIC INDUSTRIAL	ECE-V-0JA-101P
C64	26386/899	CAPACITOR-FIXED CERAMIC 100nF +/-10% 50V X7R/2C1, MULTILAYER, SURFACE-MOUNTED, SIZE 1206, NICKEL	ROHM ELECTRONICS LTD	MCH31-5C-104-KP
C65	26386/899	CAPACITOR-FIXED CERAMIC 100nF +/-10% 50V X7R/2C1, MULTILAYER, SURFACE-MOUNTED, SIZE 1206, NICKEL	ROHM ELECTRONICS LTD	MCH31-5C-104-KP
C66 to C68	26386/863	CAPACITOR-FIXED CERAMIC 1nF +/-10% 50V X7R/2C1, MULTILAYER, SURFACE-MOUNTED, SIZE 0805, NICKEL	ROHM ELECTRONICS LTD	MCH21-5C-102-KP
C69	26386/899	CAPACITOR-FIXED CERAMIC 100nF +/-10% 50V X7R/2C1, MULTILAYER, SURFACE-MOUNTED, SIZE 1206, NICKEL	ROHM ELECTRONICS LTD	MCH31-5C-104-KP
C70	26386/863	CAPACITOR-FIXED CERAMIC 1nF +/-10% 50V X7R/2C1, MULTILAYER, SURFACE-MOUNTED, SIZE 0805, NICKEL	ROHM ELECTRONICS LTD	MCH21-5C-102-KP
C71	26386/863	CAPACITOR-FIXED CERAMIC 1nF +/-10% 50V X7R/2C1, MULTILAYER, SURFACE-MOUNTED, SIZE 0805, NICKEL	ROHM ELECTRONICS LTD	MCH21-5C-102-KP
C72	26386/899	CAPACITOR-FIXED CERAMIC 100nF +/-10% 50V X7R/2C1, MULTILAYER, SURFACE-MOUNTED, SIZE 1206, NICKEL	ROHM ELECTRONICS LTD	MCH31-5C-104-KP
C73	26451/010	CAPACITOR-FIXED ALUMINIUM 100uF +/-20% 6.3V ELECTROLYTIC, SURFACE-MOUNTED, SIZE 6.6 x 6.6mm,	PANASONIC INDUSTRIAL	ECE-V-0JA-101P
C74	26386/863	CAPACITOR-FIXED CERAMIC 1nF +/-10% 50V X7R/2C1, MULTILAYER, SURFACE-MOUNTED, SIZE 0805, NICKEL	ROHM ELECTRONICS LTD	MCH21-5C-102-KP
C75	26386/875	CAPACITOR-FIXED CERAMIC 10nF +/-10% 50V X7R/2C1, MULTILAYER, SURFACE-MOUNTED, SIZE 0805, NICKEL	ROHM ELECTRONICS LTD	MCH21-5C-103-KP
C76 to C80	26386/899	CAPACITOR-FIXED CERAMIC 100nF +/-10% 50V X7R/2C1, MULTILAYER, SURFACE-MOUNTED, SIZE 1206, NICKEL	ROHM ELECTRONICS LTD	MCH31-5C-104-KP
C81	26386/863	CAPACITOR-FIXED CERAMIC 1nF +/-10% 50V X7R/2C1, MULTILAYER, SURFACE-MOUNTED, SIZE 0805, NICKEL	ROHM ELECTRONICS LTD	MCH21-5C-102-KP
C82	26386/875	CAPACITOR-FIXED CERAMIC 10nF +/-10% 50V X7R/2C1, MULTILAYER, SURFACE-MOUNTED, SIZE 0805, NICKEL	ROHM ELECTRONICS LTD	MCH21-5C-103-KP
C83	26585/003	CAPACITOR-FIXED POLYESTER 470nF +/-10% 25V SURFACE-MOUNTED, SIZE 7.3 x 9mm, 4.8mm HIGH NOM,	PHILIPS	394-28474
C84 to C87	26386/899	CAPACITOR-FIXED CERAMIC 100nF +/-10% 50V X7R/2C1, MULTILAYER, SURFACE-MOUNTED, SIZE 1206, NICKEL	ROHM ELECTRONICS LTD	MCH31-5C-104-KP
D1	28381/133	DIODE VARIABLE CAPACITNCE, BB515... 30V 20mA 2.1pF @ 28V, CAPAC RATIO 8.0 MIN, SURFACE MOUNTED,	SIEMENS LTD	BB515-B
D3 to D5	28383/903	DIODE SMALL-SIGNAL, BAV99... DUAL, 70V 100mA 1.1Vf @ 50mA, IN SERIES, MARKING CODE A7, SURFACE	PHILIPS	BAV99 (A7)
D6	28381/341	DIODE VARIABLE CAPACITNCE, BBY40... 350mW 28V 20mA 4.3pF @ 25V, CAPAC RATIO 5.0 MIN, MARKING CODE S2,	PHILIPS	BBY40

Cir. Ref.	MI part number	Description	Manufacturer	Manufacturer's part number
2nd & 3rd local oscillator A9/1 (contd.)				
D7	28383/902	DIODE SMALL-SIGNAL, BAW56... DUAL, 70V 100mA 1.1Vf @ 50mA, COMMON ANODE, MARKING CODE A1, SURFACE	PHILIPS	BAW56 (A1)
D8	28624/136	LED RED, SIZE T1, 3mm DIA, HLMP-1301... 2.4 Vf TYP, 90 mA If MAX, 2.5 mcd @ 10mA - 60 DEG,	HEWLETT-PACKARD	HLMP-1301
D9	28383/902	DIODE SMALL-SIGNAL, BAW56... DUAL, 70V 100mA 1.1Vf @ 50mA, COMMON ANODE, MARKING CODE A1, SURFACE	PHILIPS	BAW56 (A1)
D10	28624/136	LED RED, SIZE T1, 3mm DIA, HLMP-1301... 2.4 Vf TYP, 90 mA If MAX, 2.5 mcd @ 10mA - 60 DEG,	HEWLETT-PACKARD	HLMP-1301
IC1	28461/792	IC-ANALOGUE VOLTAGE-REGULATOR LM317L... 32V 100mA POSITIVE ADJUSTABLE, LINEAR, MONOLITHIC, 8 PIN,	NAT. SEMICONDUCTOR	LM317LM
IC2	28461/780	IC-ANALOGUE VOLTAGE-REGULATOR 79L05AC... 5V 100mA NEGATIVE, LINEAR, 5% REGULATION, MONOLITHIC, 8	NAT. SEMICONDUCTOR	LM79L05ACM
IC3	28461/448	IC-ANALOGUE MICROWAVE-AMP MSA-0386... 5V 35mA GAIN 12dB @ 1GHz, 3dB BANDWIDTH DC-2.4GHz, BIPOLAR, 4	HEWLETT-PACKARD	MSA-0386-TR1
IC4	28461/450	IC-ANALOGUE MICROWAVE-AMP MSA-0486... 5.25V 50mA GAIN 8dB @ 1GHz, 3dB BANDWIDTH DC-3.2GHz, BIPOLAR,	HEWLETT-PACKARD	MSA-0486-TR1
IC6	28469/566	IC-DIGITAL DIVIDER SP8402... DIVIDE BY 2 TO 256 SELECTABLE BY 2n, 1.5GHz, PHASE NOISE <160 dBc/Hz,	GEC PLESSEY SEMICOND	SP8402-KG-MPES
IC7	28462/147	IC-DIGITAL FLIP-FLOP/D-TYPE 74ACT74... 2 BIT, DUAL, POS EDGE TRIGGER, PLUS SET & CLEAR,	NAT. SEMICONDUCTOR	74ACT74SC
IC8	28466/395	IC-DIGITAL NAND-GATE 74ACT00... 2 INPUT, QUAD, CMOS-ADVANCED+TTL, 14 PIN, SMALL-OUTLINE.	NAT. SEMICONDUCTOR	74ACT00SC
IC9	28461/897	IC-ANALOGUE OPERATIONAL AMP OP-27GS... 22V LOW NOISE, 8 PIN, SMALL-OUTLINE.	ANALOG DEVICES LTD	OP-27GS
IC10	28531/023	RF-MIXER DOUBLE-BALANCED, NE602A... >14dB GAIN @ 45MHz, 500MHz TYP SIG FREQ, 1K5 -15dBm INTERCEPT,	PHILIPS	NE602AD
IC11	28464/159	IC-DIGITAL COUNTER MC10H016... 4 BIT, BINARY, ECL, 16 PIN, DUAL-IN-LINE.	MOTOROLA INC.	MC10H016P
IC12	28462/147	IC-DIGITAL FLIP-FLOP/D-TYPE 74ACT74... 2 BIT, DUAL, POS EDGE TRIGGER, PLUS SET & CLEAR,	NAT. SEMICONDUCTOR	74ACT74SC
IC13	28466/395	IC-DIGITAL NAND-GATE 74ACT00... 2 INPUT, QUAD, CMOS-ADVANCED+TTL, 14 PIN, SMALL-OUTLINE.	NAT. SEMICONDUCTOR	74ACT00SC
IC14	28461/511	IC-ANALOGUE OPERATIONAL AMP OP275... DUAL, 15V BANDWIDTH PROD 9MHz, OFFSET 1mV, DRIFT 5uV/DEG.C,	ANALOG DEVICES LTD	OP275GS
L1 to L3	23642/064	INDUCTOR-FIXED 1mH +/- 10% UNSCREENED, AIR-CORED, 510mA 1R176 MAX, 20 Q @ 0.796 MHz, 13mm HIGH MAX,	TOKO (UK) LTD	494HYF0140K
L4 to L12	23642/535	INDUCTOR-FIXED 1uH +/- 5% EPOXY-MOULD, 400mA 0R7 MAX, 30 Q @ 7.96 MHz, 120 MHz SRF, SURFACE	MEGGITT ELECTRONICS	3612-T-1R0-J
L13	23642/533	INDUCTOR-FIXED 10uH +/- 5% EPOXY-MOULD, 150mA 2R1 MAX, 30 Q @ 2.52 MHz, 36 MHz SRF, SURFACE MOUNTED,	MEGGITT ELECTRONICS	3612-T-100-J
L14	23642/707	INDUCTOR-FIXED 100uH +/- 5% EPOXY-MOULD, 40mA 10R MAX, 20 Q @ 0.796 MHz, 10 MHz SRF, SURFACE	MEGGITT ELECTRONICS	3612-T-101-J
L15	23642/519	INDUCTOR-FIXED 0.068uH +/- 5% EPOXY-MOULD, 450mA 0R36 MAX, 27 Q @ 100 MHz, 1K MHz SRF, SURFACE	MEGGITT ELECTRONICS	3612-T-068-J
L16	23642/519	INDUCTOR-FIXED 0.068uH +/- 5% EPOXY-MOULD, 450mA 0R36 MAX, 27 Q @ 100 MHz, 1K MHz SRF, SURFACE	MEGGITT ELECTRONICS	3612-T-068-J
L17	23642/707	INDUCTOR-FIXED 100uH +/- 5% EPOXY-MOULD, 40mA 10R MAX, 20 Q @ 0.796 MHz, 10 MHz SRF, SURFACE	MEGGITT ELECTRONICS	3612-T-101-J

Cir. Ref.	MI part number	Description	Manufacturer	Manufacturer's part number
2nd & 3rd local oscillator A9/1 (contd.)				
L18	23642/535	INDUCTOR-FIXED 1uH +/- 5% EPOXY-MOULD, 400mA 0R7 MAX, 30 Q @ 7.96 MHz, 120 MHz SRF, SURFACE	MEGGITT ELECTRONICS	3612-T-1R0-J
L19	23642/535	INDUCTOR-FIXED 1uH +/- 5% EPOXY-MOULD, 400mA 0R7 MAX, 30 Q @ 7.96 MHz, 120 MHz SRF, SURFACE	MEGGITT ELECTRONICS	3612-T-1R0-J
L20	23642/526	INDUCTOR-FIXED 470uH +/- 10% EPOXY-MOULD, 62mA 26R MAX, 40 Q @ 0.796 MHz, 3 MHz SRF, SURFACE MOUNTED,	MEGGITT ELECTRONICS	3613-T-471-K
PLA to PLF	23435/188	TERMINAL CONNECTOR-PIN, 0.64mm SQUARE, 5.97mm HIGH, PCB-MOUNTING, SINGLE-ENDED, PHOSPHOR BRONZE,	BERG ELECTRONICS	75401-001
PLG	23445/501	CONNECTOR-RF MMCX-TYPE FEMALE, JACK, 50 OHMS, SURFACE MOUNTING, VERTICAL, DC-6GHz, GOLD PLATD	HUBER & SUHNER	82MMCX-S50-0-51
PLJ to PLM	23435/188	TERMINAL CONNECTOR-PIN, 0.64mm SQUARE, 5.97mm HIGH, PCB-MOUNTING, SINGLE-ENDED, PHOSPHOR BRONZE,	BERG ELECTRONICS	75401-001
R1	24811/157	RESISTOR-FIXED METAL-FILM 221R +/- 1% 250mW 200V 50 ppm/DEG.C, SURFACE MOUNTED, SIZE MINI-MELF,	VISHAY COMPONENTS	SMM0204-221R-1%50ppm
R2	24811/176	RESISTOR-FIXED METAL-FILM 1K3 +/- 1% 250mW 200V 50 ppm/DEG.C, SURFACE MOUNTED, SIZE MINI-MELF, (8mm	VISHAY COMPONENTS	SMM0204-1K3-1%50ppm
R4	24321/400	RESISTOR-FIXED METAL-GLAZE 10R +/- 2% 100mW 100V 200 ppm/DEG.C, Ni-BARRIER & REFLOW HOT-DIP SOLDER,	VTM (UK) LTD	503-0-10R-1%-100ppm
R5	24321/412	RESISTOR-FIXED METAL-GLAZE 33R +/- 2% 100mW 100V 200 ppm/DEG.C, Ni-BARRIER & REFLOW HOT-DIP SOLDER,	VTM (UK) LTD	503-0-33R-1%-100ppm
R6 to R10	24811/149	RESISTOR-FIXED METAL-FILM 100R +/- 1% 250mW 200V 50 ppm/DEG.C, SURFACE MOUNTED, SIZE MINI-MELF,	VISHAY COMPONENTS	SMM0204-100R-1%50ppm
R11	24811/145	RESISTOR-FIXED METAL-FILM 68R1 +/- 1% 250mW 200V 50 ppm/DEG.C, SURFACE MOUNTED, SIZE MINI-MELF,	VISHAY COMPONENTS	SMM0204-68R1-1%50ppm
R12	24811/145	RESISTOR-FIXED METAL-FILM 68R1 +/- 1% 250mW 200V 50 ppm/DEG.C, SURFACE MOUNTED, SIZE MINI-MELF,	VISHAY COMPONENTS	SMM0204-68R1-1%50ppm
R13	24811/165	RESISTOR-FIXED METAL-FILM 475R +/- 1% 250mW 200V 50 ppm/DEG.C, SURFACE MOUNTED, SIZE MINI-MELF,	VISHAY COMPONENTS	SMM0204-475R-1%50ppm
R14	24811/909	RESISTOR-FIXED METAL-FILM 51R1 +/- 1% 250mW 200V 50 ppm/DEG.C, LOW-INDUCTANCE, SURFACE MOUNTED,	VISHAY COMPONENTS	SMM0204-HF-51R1-1%
R15	24811/169	RESISTOR-FIXED METAL-FILM 681R +/- 1% 250mW 200V 50 ppm/DEG.C, SURFACE MOUNTED, SIZE MINI-MELF,	VISHAY COMPONENTS	SMM0204-681R-1%50ppm
R16	24811/903	RESISTOR-FIXED METAL-FILM 18R2 +/- 1% 250mW 200V 50 ppm/DEG.C, LOW-INDUCTANCE, SURFACE MOUNTED,	VISHAY COMPONENTS	SMM0204-HF-18R2-1%
R17	24811/161	RESISTOR-FIXED METAL-FILM 332R +/- 1% 250mW 200V 50 ppm/DEG.C, SURFACE MOUNTED, SIZE MINI-MELF,	VISHAY COMPONENTS	SMM0204-332R-1%50ppm
R20	24811/161	RESISTOR-FIXED METAL-FILM 332R +/- 1% 250mW 200V 50 ppm/DEG.C, SURFACE MOUNTED, SIZE MINI-MELF,	VISHAY COMPONENTS	SMM0204-332R-1%50ppm
R21	24811/137	RESISTOR-FIXED METAL-FILM 33R2 +/- 1% 250mW 200V 50 ppm/DEG.C, SURFACE MOUNTED, SIZE MINI-MELF,	VISHAY COMPONENTS	SMM0204-33R2-1%50ppm
R22	24811/197	RESISTOR-FIXED METAL-FILM 10K +/- 1% 250mW 200V 50 ppm/DEG.C, SURFACE MOUNTED, SIZE MINI-MELF, (8mm	VISHAY COMPONENTS	SMM0204-10K-1%50ppm
R23	24811/165	RESISTOR-FIXED METAL-FILM 475R +/- 1% 250mW 200V 50 ppm/DEG.C, SURFACE MOUNTED, SIZE MINI-MELF,	VISHAY COMPONENTS	SMM0204-475R-1%50ppm
R24	24811/189	RESISTOR-FIXED METAL-FILM 4K75 +/- 1% 250mW 200V 50 ppm/DEG.C, SURFACE MOUNTED, SIZE MINI-MELF,	VISHAY COMPONENTS	SMM0204-4K75-1%50ppm
R25	24811/182	RESISTOR-FIXED METAL-FILM 2K43 +/- 1% 250mW 200V 50 ppm/DEG.C, SURFACE MOUNTED, SIZE MINI-MELF,	VISHAY COMPONENTS	SMM0204-2K43-1%50ppm

REPLACEABLE PARTS

2nd & 3rd local oscillator A9/1 (contd.)

Cir. Ref.	MI part number	Description	Manufacturer	Manufacturer's part number
R26	24811/182	RESISTOR-FIXED METAL-FILM 2K43 +/- 1% 250mW 200V 50 ppm/DEG.C, SURFACE MOUNTED, SIZE MINI-MELF,	VISHAY COMPONENTS	SMM0204-2K43-1%50ppm
R27	24811/189	RESISTOR-FIXED METAL-FILM 4K75 +/- 1% 250mW 200V 50 ppm/DEG.C, SURFACE MOUNTED, SIZE MINI-MELF,	VISHAY COMPONENTS	SMM0204-4K75-1%50ppm
R28	24811/189	RESISTOR-FIXED METAL-FILM 4K75 +/- 1% 250mW 200V 50 ppm/DEG.C, SURFACE MOUNTED, SIZE MINI-MELF,	VISHAY COMPONENTS	SMM0204-4K75-1%50ppm
R29	24811/165	RESISTOR-FIXED METAL-FILM 475R +/- 1% 250mW 200V 50 ppm/DEG.C, SURFACE MOUNTED, SIZE MINI-MELF,	VISHAY COMPONENTS	SMM0204-475R-1%50ppm
R30	24811/149	RESISTOR-FIXED METAL-FILM 100R +/- 1% 250mW 200V 50 ppm/DEG.C, SURFACE MOUNTED, SIZE MINI-MELF,	VISHAY COMPONENTS	SMM0204-100R-1%50ppm
R31	24811/141	RESISTOR-FIXED METAL-FILM 47R5 +/- 1% 250mW 200V 50 ppm/DEG.C, SURFACE MOUNTED, SIZE MINI-MELF,	VISHAY COMPONENTS	SMM0204-47R5-1%50ppm
R32	24811/189	RESISTOR-FIXED METAL-FILM 4K75 +/- 1% 250mW 200V 50 ppm/DEG.C, SURFACE MOUNTED, SIZE MINI-MELF,	VISHAY COMPONENTS	SMM0204-4K75-1%50ppm
R33	24811/182	RESISTOR-FIXED METAL-FILM 2K43 +/- 1% 250mW 200V 50 ppm/DEG.C, SURFACE MOUNTED, SIZE MINI-MELF,	VISHAY COMPONENTS	SMM0204-2K43-1%50ppm
R34	24321/412	RESISTOR-FIXED METAL-GLAZE 33R +/- 2% 100mW 100V 200 ppm/DEG.C, Ni-BARRIER & REFLOW HOT-DIP SOLDER,	VTM (UK) LTD	503-0-33R-1%-100ppm
R35	24811/177	RESISTOR-FIXED METAL-FILM 1K5 +/- 1% 250mW 200V 50 ppm/DEG.C, SURFACE MOUNTED, SIZE MINI-MELF, (8mm	VISHAY COMPONENTS	SMM0204-1K5-1%50ppm
R36	24811/177	RESISTOR-FIXED METAL-FILM 1K5 +/- 1% 250mW 200V 50 ppm/DEG.C, SURFACE MOUNTED, SIZE MINI-MELF, (8mm	VISHAY COMPONENTS	SMM0204-1K5-1%50ppm
R37	24811/184	RESISTOR-FIXED METAL-FILM 3K01 +/- 1% 250mW 200V 50 ppm/DEG.C, SURFACE MOUNTED, SIZE MINI-MELF,	VISHAY COMPONENTS	SMM0204-3K01-1%50ppm
R38	24811/197	RESISTOR-FIXED METAL-FILM 10K +/- 1% 250mW 200V 50 ppm/DEG.C, SURFACE MOUNTED, SIZE MINI-MELF, (8mm	VISHAY COMPONENTS	SMM0204-10K-1%50ppm
R39	24811/189	RESISTOR-FIXED METAL-FILM 4K75 +/- 1% 250mW 200V 50 ppm/DEG.C, SURFACE MOUNTED, SIZE MINI-MELF,	VISHAY COMPONENTS	SMM0204-4K75-1%50ppm
R40	24811/184	RESISTOR-FIXED METAL-FILM 3K01 +/- 1% 250mW 200V 50 ppm/DEG.C, SURFACE MOUNTED, SIZE MINI-MELF,	VISHAY COMPONENTS	SMM0204-3K01-1%50ppm
R41	24811/141	RESISTOR-FIXED METAL-FILM 47R5 +/- 1% 250mW 200V 50 ppm/DEG.C, SURFACE MOUNTED, SIZE MINI-MELF,	VISHAY COMPONENTS	SMM0204-47R5-1%50ppm
R42	24811/182	RESISTOR-FIXED METAL-FILM 2K43 +/- 1% 250mW 200V 50 ppm/DEG.C, SURFACE MOUNTED, SIZE MINI-MELF,	VISHAY COMPONENTS	SMM0204-2K43-1%50ppm
R43	24811/197	RESISTOR-FIXED METAL-FILM 10K +/- 1% 250mW 200V 50 ppm/DEG.C, SURFACE MOUNTED, SIZE MINI-MELF, (8mm	VISHAY COMPONENTS	SMM0204-10K-1%50ppm
R44	24811/201	RESISTOR-FIXED METAL-FILM 15K +/- 1% 250mW 200V 50 ppm/DEG.C, SURFACE MOUNTED, SIZE MINI-MELF, (8mm	VISHAY COMPONENTS	SMM0204-15K-1%50ppm
R45	24811/177	RESISTOR-FIXED METAL-FILM 1K5 +/- 1% 250mW 200V 50 ppm/DEG.C, SURFACE MOUNTED, SIZE MINI-MELF, (8mm	VISHAY COMPONENTS	SMM0204-1K5-1%50ppm
R46	24811/161	RESISTOR-FIXED METAL-FILM 332R +/- 1% 250mW 200V 50 ppm/DEG.C, SURFACE MOUNTED, SIZE MINI-MELF,	VISHAY COMPONENTS	SMM0204-332R-1%50ppm
R47	24811/141	RESISTOR-FIXED METAL-FILM 47R5 +/- 1% 250mW 200V 50 ppm/DEG.C, SURFACE MOUNTED, SIZE MINI-MELF,	VISHAY COMPONENTS	SMM0204-47R5-1%50ppm
R48	24811/175	RESISTOR-FIXED METAL-FILM 1K21 +/- 1% 250mW 200V 50 ppm/DEG.C, SURFACE MOUNTED, SIZE MINI-MELF,	VISHAY COMPONENTS	SMM0204-1K21-1%50ppm
R49	24811/129	RESISTOR-FIXED METAL-FILM 15R +/- 1% 250mW 200V 50 ppm/DEG.C, SURFACE MOUNTED, SIZE MINI-MELF, (8mm	VISHAY COMPONENTS	SMM0204-15R-1%-50ppm
R50	24811/153	RESISTOR-FIXED METAL-FILM 150R +/- 1% 250mW 200V 50 ppm/DEG.C, SURFACE MOUNTED, SIZE MINI-MELF,	VISHAY COMPONENTS	SMM0204-150R-1%50ppm
R51	24811/189	RESISTOR-FIXED METAL-FILM 4K75 +/- 1% 250mW 200V 50 ppm/DEG.C, SURFACE MOUNTED, SIZE MINI-MELF,	VISHAY COMPONENTS	SMM0204-4K75-1%50ppm

2nd & 3rd local oscillator A9/1 (contd.)

Cir. Ref.	MI part number	Description	Manufacturer	Manufacturer's part number
R52	24811/189	RESISTOR-FIXED METAL-FILM 4K75 +/- 1% 250mW 200V 50 ppm/DEG.C, SURFACE MOUNTED, SIZE MINI-MELF,	VISHAY COMPONENTS	SMM0204-4K75-1%50ppm
R53	24811/197	RESISTOR-FIXED METAL-FILM 10K +/- 1% 250mW 200V 50 ppm/DEG.C, SURFACE MOUNTED, SIZE MINI-MELF, (8mm	VISHAY COMPONENTS	SMM0204-10K-1%50ppm
R54	24811/161	RESISTOR-FIXED METAL-FILM 332R +/- 1% 250mW 200V 50 ppm/DEG.C, SURFACE MOUNTED, SIZE MINI-MELF,	VISHAY COMPONENTS	SMM0204-332R-1%50ppm
R55	24811/175	RESISTOR-FIXED METAL-FILM 1K21 +/- 1% 250mW 200V 50 ppm/DEG.C, SURFACE MOUNTED, SIZE MINI-MELF,	VISHAY COMPONENTS	SMM0204-1K21-1%50ppm
R56	24811/189	RESISTOR-FIXED METAL-FILM 4K75 +/- 1% 250mW 200V 50 ppm/DEG.C, SURFACE MOUNTED, SIZE MINI-MELF,	VISHAY COMPONENTS	SMM0204-4K75-1%50ppm
R57	24811/189	RESISTOR-FIXED METAL-FILM 4K75 +/- 1% 250mW 200V 50 ppm/DEG.C, SURFACE MOUNTED, SIZE MINI-MELF,	VISHAY COMPONENTS	SMM0204-4K75-1%50ppm
R58	24811/161	RESISTOR-FIXED METAL-FILM 332R +/- 1% 250mW 200V 50 ppm/DEG.C, SURFACE MOUNTED, SIZE MINI-MELF,	VISHAY COMPONENTS	SMM0204-332R-1%50ppm
R59	24811/137	RESISTOR-FIXED METAL-FILM 33R2 +/- 1% 250mW 200V 50 ppm/DEG.C, SURFACE MOUNTED, SIZE MINI-MELF,	VISHAY COMPONENTS	SMM0204-33R2-1%50ppm
R60	24811/161	RESISTOR-FIXED METAL-FILM 332R +/- 1% 250mW 200V 50 ppm/DEG.C, SURFACE MOUNTED, SIZE MINI-MELF,	VISHAY COMPONENTS	SMM0204-332R-1%50ppm
R61	24811/168	RESISTOR-FIXED METAL-FILM 619R +/- 1% 250mW 200V 50 ppm/DEG.C, SURFACE MOUNTED, SIZE MINI-MELF,	VISHAY COMPONENTS	SMM0204-619R-1%50ppm
R62	24811/167	RESISTOR-FIXED METAL-FILM 562R +/- 1% 250mW 200V 50 ppm/DEG.C, SURFACE MOUNTED, SIZE MINI-MELF,	VISHAY COMPONENTS	SMM0204-562R-1%50ppm
R63	24811/157	RESISTOR-FIXED METAL-FILM 221R +/- 1% 250mW 200V 50 ppm/DEG.C, SURFACE MOUNTED, SIZE MINI-MELF,	VISHAY COMPONENTS	SMM0204-221R-1%50ppm
R64 to R66	24811/189	RESISTOR-FIXED METAL-FILM 4K75 +/- 1% 250mW 200V 50 ppm/DEG.C, SURFACE MOUNTED, SIZE MINI-MELF,	VISHAY COMPONENTS	SMM0204-4K75-1%50ppm
R67 to R69	24321/412	RESISTOR-FIXED METAL-GLAZE 33R +/- 2% 100mW 100V 200 ppm/DEG.C, Ni-BARRIER & REFLOW HOT-DIP SOLDER,	VTM (UK) LTD	503-0-33R-1%-100ppm
R70	24811/165	RESISTOR-FIXED METAL-FILM 475R +/- 1% 250mW 200V 50 ppm/DEG.C, SURFACE MOUNTED, SIZE MINI-MELF,	VISHAY COMPONENTS	SMM0204-475R-1%50ppm
R71	24811/185	RESISTOR-FIXED METAL-FILM 3K32 +/- 1% 250mW 200V 50 ppm/DEG.C, SURFACE MOUNTED, SIZE MINI-MELF,	VISHAY COMPONENTS	SMM0204-3K32-1%50ppm
R72	24811/185	RESISTOR-FIXED METAL-FILM 3K32 +/- 1% 250mW 200V 50 ppm/DEG.C, SURFACE MOUNTED, SIZE MINI-MELF,	VISHAY COMPONENTS	SMM0204-3K32-1%50ppm
R73	24811/167	RESISTOR-FIXED METAL-FILM 562R +/- 1% 250mW 200V 50 ppm/DEG.C, SURFACE MOUNTED, SIZE MINI-MELF,	VISHAY COMPONENTS	SMM0204-562R-1%50ppm
R74	24811/177	RESISTOR-FIXED METAL-FILM 1K5 +/- 1% 250mW 200V 50 ppm/DEG.C, SURFACE MOUNTED, SIZE MINI-MELF, (8mm	VISHAY COMPONENTS	SMM0204-1K5-1%50ppm
R75	24811/165	RESISTOR-FIXED METAL-FILM 475R +/- 1% 250mW 200V 50 ppm/DEG.C, SURFACE MOUNTED, SIZE MINI-MELF,	VISHAY COMPONENTS	SMM0204-475R-1%50ppm
R76	24811/168	RESISTOR-FIXED METAL-FILM 619R +/- 1% 250mW 200V 50 ppm/DEG.C, SURFACE MOUNTED, SIZE MINI-MELF,	VISHAY COMPONENTS	SMM0204-619R-1%50ppm
R77	24811/167	RESISTOR-FIXED METAL-FILM 562R +/- 1% 250mW 200V 50 ppm/DEG.C, SURFACE MOUNTED, SIZE MINI-MELF,	VISHAY COMPONENTS	SMM0204-562R-1%50ppm
R78	24811/182	RESISTOR-FIXED METAL-FILM 2K43 +/- 1% 250mW 200V 50 ppm/DEG.C, SURFACE MOUNTED, SIZE MINI-MELF,	VISHAY COMPONENTS	SMM0204-2K43-1%50ppm
R80	24811/165	RESISTOR-FIXED METAL-FILM 475R +/- 1% 250mW 200V 50 ppm/DEG.C, SURFACE MOUNTED, SIZE MINI-MELF,	VISHAY COMPONENTS	SMM0204-475R-1%50ppm
R81	24811/137	RESISTOR-FIXED METAL-FILM 33R2 +/- 1% 250mW 200V 50 ppm/DEG.C, SURFACE MOUNTED, SIZE MINI-MELF,	VISHAY COMPONENTS	SMM0204-33R2-1%50ppm
R82	24811/197	RESISTOR-FIXED METAL-FILM 10K +/- 1% 250mW 200V 50 ppm/DEG.C, SURFACE MOUNTED, SIZE MINI-MELF, (8mm	VISHAY COMPONENTS	SMM0204-10K-1%50ppm

Cir. Ref.	MI part number	Description	Manufacturer	Manufacturer's part number
2nd & 3rd local oscillator A9/1 (contd.)				
R83	24811/165	RESISTOR-FIXED METAL-FILM 475R +/- 1% 250mW 200V 50 ppm/DEG.C, SURFACE MOUNTED, SIZE MINI-MELF,	VISHAY COMPONENTS	SMM0204-475R-1%50ppm
R84	24811/141	RESISTOR-FIXED METAL-FILM 47R5 +/- 1% 250mW 200V 50 ppm/DEG.C, SURFACE MOUNTED, SIZE MINI-MELF,	VISHAY COMPONENTS	SMM0204-47R5-1%50ppm
R85	24811/185	RESISTOR-FIXED METAL-FILM 3K32 +/- 1% 250mW 200V 50 ppm/DEG.C, SURFACE MOUNTED, SIZE MINI-MELF,	VISHAY COMPONENTS	SMM0204-3K32-1%50ppm
R86	24811/189	RESISTOR-FIXED METAL-FILM 4K75 +/- 1% 250mW 200V 50 ppm/DEG.C, SURFACE MOUNTED, SIZE MINI-MELF,	VISHAY COMPONENTS	SMM0204-4K75-1%50ppm
R87	24811/137	RESISTOR-FIXED METAL-FILM 33R2 +/- 1% 250mW 200V 50 ppm/DEG.C, SURFACE MOUNTED, SIZE MINI-MELF,	VISHAY COMPONENTS	SMM0204-33R2-1%50ppm
R88	24811/161	RESISTOR-FIXED METAL-FILM 332R +/- 1% 250mW 200V 50 ppm/DEG.C, SURFACE MOUNTED, SIZE MINI-MELF,	VISHAY COMPONENTS	SMM0204-332R-1%50ppm
R89	24811/137	RESISTOR-FIXED METAL-FILM 33R2 +/- 1% 250mW 200V 50 ppm/DEG.C, SURFACE MOUNTED, SIZE MINI-MELF,	VISHAY COMPONENTS	SMM0204-33R2-1%50ppm
R90	24811/171	RESISTOR-FIXED METAL-FILM 825R +/- 1% 250mW 200V 50 ppm/DEG.C, SURFACE MOUNTED, SIZE MINI-MELF,	VISHAY COMPONENTS	SMM0204-825R-1%50ppm
R91	24811/189	RESISTOR-FIXED METAL-FILM 4K75 +/- 1% 250mW 200V 50 ppm/DEG.C, SURFACE MOUNTED, SIZE MINI-MELF,	VISHAY COMPONENTS	SMM0204-4K75-1%50ppm
R92	24811/182	RESISTOR-FIXED METAL-FILM 2K43 +/- 1% 250mW 200V 50 ppm/DEG.C, SURFACE MOUNTED, SIZE MINI-MELF,	VISHAY COMPONENTS	SMM0204-2K43-1%50ppm
R93	24811/182	RESISTOR-FIXED METAL-FILM 2K43 +/- 1% 250mW 200V 50 ppm/DEG.C, SURFACE MOUNTED, SIZE MINI-MELF,	VISHAY COMPONENTS	SMM0204-2K43-1%50ppm
R94	24811/189	RESISTOR-FIXED METAL-FILM 4K75 +/- 1% 250mW 200V 50 ppm/DEG.C, SURFACE MOUNTED, SIZE MINI-MELF,	VISHAY COMPONENTS	SMM0204-4K75-1%50ppm
R95	24811/189	RESISTOR-FIXED METAL-FILM 4K75 +/- 1% 250mW 200V 50 ppm/DEG.C, SURFACE MOUNTED, SIZE MINI-MELF,	VISHAY COMPONENTS	SMM0204-4K75-1%50ppm
R96	24811/165	RESISTOR-FIXED METAL-FILM 475R +/- 1% 250mW 200V 50 ppm/DEG.C, SURFACE MOUNTED, SIZE MINI-MELF,	VISHAY COMPONENTS	SMM0204-475R-1%50ppm
R97	24811/175	RESISTOR-FIXED METAL-FILM 1K21 +/- 1% 250mW 200V 50 ppm/DEG.C, SURFACE MOUNTED, SIZE MINI-MELF,	VISHAY COMPONENTS	SMM0204-1K21-1%50ppm
R98	24811/175	RESISTOR-FIXED METAL-FILM 1K21 +/- 1% 250mW 200V 50 ppm/DEG.C, SURFACE MOUNTED, SIZE MINI-MELF,	VISHAY COMPONENTS	SMM0204-1K21-1%50ppm
R99	24811/189	RESISTOR-FIXED METAL-FILM 4K75 +/- 1% 250mW 200V 50 ppm/DEG.C, SURFACE MOUNTED, SIZE MINI-MELF,	VISHAY COMPONENTS	SMM0204-4K75-1%50ppm
R100	24811/189	RESISTOR-FIXED METAL-FILM 4K75 +/- 1% 250mW 200V 50 ppm/DEG.C, SURFACE MOUNTED, SIZE MINI-MELF,	VISHAY COMPONENTS	SMM0204-4K75-1%50ppm
R101	24811/125	RESISTOR-FIXED METAL-FILM 10R +/- 1% 250mW 200V 50 ppm/DEG.C, SURFACE MOUNTED, SIZE MINI-MELF, (8mm	VISHAY COMPONENTS	SMM0204-10R-1%-50ppm
R102	24811/171	RESISTOR-FIXED METAL-FILM 825R +/- 1% 250mW 200V 50 ppm/DEG.C, SURFACE MOUNTED, SIZE MINI-MELF,	VISHAY COMPONENTS	SMM0204-825R-1%50ppm
R103	24811/125	RESISTOR-FIXED METAL-FILM 10R +/- 1% 250mW 200V 50 ppm/DEG.C, SURFACE MOUNTED, SIZE MINI-MELF, (8mm	VISHAY COMPONENTS	SMM0204-10R-1%-50ppm
SKK	23435/990	CONNECTOR SHORTING, SOCKET, 2 WAY, FOR 0.64mm SQ PINS, 2.54mm PITCH, 9.6mm HIGH, FREE MOUNTING,	BERG ELECTRONICS	65474-001
SKM	23435/990	CONNECTOR SHORTING, SOCKET, 2 WAY, FOR 0.64mm SQ PINS, 2.54mm PITCH, 9.6mm HIGH, FREE MOUNTING,	BERG ELECTRONICS	65474-001
TR1	28487/809	TRANSISTOR NPN BIPOLAR BFR93A... 12V 5GHz 250mW 35mA 40hFE MIN @ 30mA, MARKING CODE R2, SURFACE	PHILIPS	BFR93A

Cir. Ref.	MI part number	Description	Manufacturer	Manufacturer's part number
2nd & 3rd local oscillator A9/1 (contd.)				
TR2	28457/858	TRANSISTOR PNP BIPOLAR BSR12... 15V 1.5GHz 250mW 100mA 30hFE @ 10mA, ON-20nS OFF-30nS, MARKING CODE	PHILIPS	BSR12
TR3 to TR12	28457/851	TRANSISTOR NPN BIPOLAR BFS17... 15V 1.3GHz 250mW 50mA 20hFE MIN @ 2mA, MARKING CODE E1, SURFACE	PHILIPS	BFS17
TR13	28457/858	TRANSISTOR PNP BIPOLAR BSR12... 15V 1.5GHz 250mW 100mA 30hFE @ 10mA, ON-20nS OFF-30nS, MARKING CODE	PHILIPS	BSR12
TR14	28457/851	TRANSISTOR NPN BIPOLAR BFS17... 15V 1.3GHz 250mW 50mA 20hFE MIN @ 2mA, MARKING CODE E1, SURFACE	PHILIPS	BFS17
XL1	28312/144	FILTER CRYSTAL, PCB-MOUNT, 10.7MHz, 3dB PASSBAND 7.5KHz, 40dB STOPBAND 25KHz, 4 POLES, 2.5dB MAX	EUROQUARTZ LTD	10M15B

Cir. Ref.	MI part number	Description	Manufacturer	Manufacturer's part number
90 MHz swept local oscillator		**A10**		
		When ordering, prefix circuit reference with A10.		
	44829-930	Complete unit	Issue 8	
C1	26386/899	CAPACITOR-FIXED CERAMIC 100nF +/-10% 50V X7R/2C1, MULTILAYER, SURFACE-MOUNTED, SIZE 1206, NICKEL	ROHM ELECTRONICS LTD	MCH31-5C-104-KP
C2	26386/863	CAPACITOR-FIXED CERAMIC 1nF +/-10% 50V X7R/2C1, MULTILAYER, SURFACE-MOUNTED, SIZE 0805, NICKEL	ROHM ELECTRONICS LTD	MCH21-5C-102-KP
C3	26343/494	CAPACITOR-FIXED CERAMIC 33pF +/-2% 63V N150 SINGLELAYER, RADIAL, 2.5mm PWP, (TAPED).	VISHAY COMPONENTS	ROP-330-GAK-ACR-J
C4	26343/434	CAPACITOR-FIXED CERAMIC 68pF +/-2% 63V N150 SINGLELAYER, RADIAL, 2.5mm PWP, (TAPED).	VISHAY COMPONENTS	ROP-680-GAK-ACR-J
C5	26386/899	CAPACITOR-FIXED CERAMIC 100nF +/-10% 50V X7R/2C1, MULTILAYER, SURFACE-MOUNTED, SIZE 1206, NICKEL	ROHM ELECTRONICS LTD	MCH31-5C-104-KP
C6 to C15	26386/863	CAPACITOR-FIXED CERAMIC 1nF +/-10% 50V X7R/2C1, MULTILAYER, SURFACE-MOUNTED, SIZE 0805, NICKEL	ROHM ELECTRONICS LTD	MCH21-5C-102-KP
C16	26451/003	CAPACITOR-FIXED ALUMINIUM 10uF +/-20% 16V ELECTROLYTIC, SURFACE-MOUNTED, SIZE 4.3 x 4.3mm,	PANASONIC INDUSTRIAL	ECE-V-1CA-100R
C18	26451/003	CAPACITOR-FIXED ALUMINIUM 10uF +/-20% 16V ELECTROLYTIC, SURFACE-MOUNTED, SIZE 4.3 x 4.3mm,	PANASONIC INDUSTRIAL	ECE-V-1CA-100R
C19	26386/804	CAPACITOR-FIXED CERAMIC 2.2pF +/-0.5pF 50V NPO MULTILAYER, SURFACE-MOUNTED, SIZE 0805, NICKEL	ROHM ELECTRONICS LTD	MCH21-5A-2R2-DP
C20	26386/804	CAPACITOR-FIXED CERAMIC 2.2pF +/-0.5pF 50V NPO MULTILAYER, SURFACE-MOUNTED, SIZE 0805, NICKEL	ROHM ELECTRONICS LTD	MCH21-5A-2R2-DP
C22	26386/899	CAPACITOR-FIXED CERAMIC 100nF +/-10% 50V X7R/2C1, MULTILAYER, SURFACE-MOUNTED, SIZE 1206, NICKEL	ROHM ELECTRONICS LTD	MCH31-5C-104-KP
C25 to C28	26386/863	CAPACITOR-FIXED CERAMIC 1nF +/-10% 50V X7R/2C1, MULTILAYER, SURFACE-MOUNTED, SIZE 0805, NICKEL	ROHM ELECTRONICS LTD	MCH21-5C-102-KP
C29	26386/875	CAPACITOR-FIXED CERAMIC 10nF +/-10% 50V X7R/2C1, MULTILAYER, SURFACE-MOUNTED, SIZE 0805, NICKEL	ROHM ELECTRONICS LTD	MCH21-5C-103-KP
C30	26386/867	CAPACITOR-FIXED CERAMIC 2.2nF +/-10% 50V X7R/2C1, MULTILAYER, SURFACE-MOUNTED, SIZE 0805, NICKEL	ROHM ELECTRONICS LTD	MCH21-5C-222-KP
C31	26343/430	CAPACITOR-FIXED CERAMIC 39pF +/-2% 63V N150 SINGLELAYER, RADIAL, 2.5mm PWP, (TAPED).	VISHAY COMPONENTS	ROP-390-GAK-ACR-J
C34	26386/824	CAPACITOR-FIXED CERAMIC 100pF +/-5% 50V NP0 MULTILAYER, SURFACE-MOUNTED, SIZE 0805, NICKEL	ROHM ELECTRONICS LTD	MCH21-5A-101-JP
C36	26343/499	CAPACITOR-FIXED CERAMIC 27pF +/-2% 63V N150 SINGLELAYER, RADIAL, 2.5mm PWP, (TAPED).	VISHAY COMPONENTS	ROP-270-GAK-ACR-J
C38	26451/009	CAPACITOR-FIXED ALUMINIUM 47uF +/-20% 16V ELECTROLYTIC, SURFACE-MOUNTED, SIZE 6.6 x 6.6mm,	PANASONIC INDUSTRIAL	ECE-V-1CA-470P
C39	26451/009	CAPACITOR-FIXED ALUMINIUM 47uF +/-20% 16V ELECTROLYTIC, SURFACE-MOUNTED, SIZE 6.6 x 6.6mm,	PANASONIC INDUSTRIAL	ECE-V-1CA-470P
D1	28381/341	DIODE VARIABLE CAPACITNCE, BBY40... 350mW 28V 20mA 4.3pF @ 25V, CAPAC RATIO 5.0 MIN, MARKING CODE S2,	PHILIPS	BBY40
D2	28371/302	DIODE ZENER, BZX84-C4V7... 350mW 4.7V 5% 250mA MARKING CODE Z1, SURFACE MOUNTED, SOT-23, (8mm	PHILIPS	BZX84-C4V7
D3	28371/302	DIODE ZENER, BZX84-C4V7... 350mW 4.7V 5% 250mA MARKING CODE Z1, SURFACE MOUNTED, SOT-23, (8mm	PHILIPS	BZX84-C4V7

Cir. Ref.	MI part number	Description	Manufacturer	Manufacturer's part number
90 MHz swept local oscillator A10 (contd.)				
IC1	28461/470	IC-ANALOGUE OPERATIONAL AMP AD827... DUAL, 15V UNITY BANDWIDTH 50MHz, SLEW RATE 200V/uS, I/P	ANALOG DEVICES LTD	AD827JN
IC2	28531/021	RF-MIXER DOUBLE-BALANCED, SL6440C... 150MHz MAX, 15 dBm RF-1dB COMPRESS, +30dBm INTERCEPT,		
IC3	28461/029	IC-ANALOGUE SWITCH DG211... QUAD, 15V SPST, ON-RESISTANCE <175R, TTL COMPATIBLE, CMOS, 16 PIN,	ANALOG DEVICES LTD	ADG211AKR
L1	23642/937	INDUCTOR-VARIABLE 0.11uH NOM, UNSCREENED, 2 PIN, 10mm SQUARE PCB MOUNT BASE, Q>215 @ 100MHz,	TOKO (UK) LTD	E526HN-100117
L2	23642/533	INDUCTOR-FIXED 10uH +/- 5% EPOXY-MOULD, 150mA 2R1 MAX, 30 Q @ 2.52 MHz, 36 MHz SRF, SURFACE MOUNTED,	MEGGITT ELECTRONICS	3612-T-100-J
L3	23642/533	INDUCTOR-FIXED 10uH +/- 5% EPOXY-MOULD, 150mA 2R1 MAX, 30 Q @ 2.52 MHz, 36 MHz SRF, SURFACE MOUNTED,	MEGGITT ELECTRONICS	3612-T-100-J
L5	23642/512	INDUCTOR-FIXED 22uH +/- 5% EPOXY-MOULD, 110mA 3R7 MAX, 30 Q @ 2.5 MHz, 25 MHz SRF, SURFACE MOUNTED,	MEGGITT ELECTRONICS	3612-T-220-J
L6	23642/512	INDUCTOR-FIXED 22uH +/- 5% EPOXY-MOULD, 110mA 3R7 MAX, 30 Q @ 2.5 MHz, 25 MHz SRF, SURFACE MOUNTED,	MEGGITT ELECTRONICS	3612-T-220-J
PLA to PLE	23435/188	TERMINAL CONNECTOR-PIN, 0.64mm SQUARE, 5.97mm HIGH, PCB-MOUNTING, SINGLE-ENDED, PHOSPHOR BRONZE,	BERG ELECTRONICS	75401-001
R1	24811/191	RESISTOR-FIXED METAL-FILM 5K62 +/- 1% 250mW 200V 50 ppm/DEG.C, SURFACE MOUNTED, SIZE MINI-MELF,	VISHAY COMPONENTS	SMM0204-5K62-1%50ppm
R3	24811/197	RESISTOR-FIXED METAL-FILM 10K +/- 1% 250mW 200V 50 ppm/DEG.C, SURFACE MOUNTED, SIZE MINI-MELF, (8mm	VISHAY COMPONENTS	SMM0204-10K-1%50ppm
R4	24811/197	RESISTOR-FIXED METAL-FILM 10K +/- 1% 250mW 200V 50 ppm/DEG.C, SURFACE MOUNTED, SIZE MINI-MELF, (8mm	VISHAY COMPONENTS	SMM0204-10K-1%50ppm
R5	24811/190	RESISTOR-FIXED METAL-FILM 5K11 +/- 1% 250mW 200V 50 ppm/DEG.C, SURFACE MOUNTED, SIZE MINI-MELF,	VISHAY COMPONENTS	SMM0204-5K11-1%50ppm
R6	24811/201	RESISTOR-FIXED METAL-FILM 15K +/- 1% 250mW 200V 50 ppm/DEG.C, SURFACE MOUNTED, SIZE MINI-MELF, (8mm	VISHAY COMPONENTS	SMM0204-15K-1%50ppm
R7	24811/191	RESISTOR-FIXED METAL-FILM 5K62 +/- 1% 250mW 200V 50 ppm/DEG.C, SURFACE MOUNTED, SIZE MINI-MELF,	VISHAY COMPONENTS	SMM0204-5K62-1%50ppm
R8	24811/165	RESISTOR-FIXED METAL-FILM 475R +/- 1% 250mW 200V 50 ppm/DEG.C, SURFACE MOUNTED, SIZE MINI-MELF,	VISHAY COMPONENTS	SMM0204-475R-1%50ppm
R10	24811/149	RESISTOR-FIXED METAL-FILM 100R +/- 1% 250mW 200V 50 ppm/DEG.C, SURFACE MOUNTED, SIZE MINI-MELF,	VISHAY COMPONENTS	SMM0204-100R-1%50ppm
R11	24811/165	RESISTOR-FIXED METAL-FILM 475R +/- 1% 250mW 200V 50 ppm/DEG.C, SURFACE MOUNTED, SIZE MINI-MELF,	VISHAY COMPONENTS	SMM0204-475R-1%50ppm
R12	24811/149	RESISTOR-FIXED METAL-FILM 100R +/- 1% 250mW 200V 50 ppm/DEG.C, SURFACE MOUNTED, SIZE MINI-MELF,	VISHAY COMPONENTS	SMM0204-100R-1%50ppm
R13	24811/165	RESISTOR-FIXED METAL-FILM 475R +/- 1% 250mW 200V 50 ppm/DEG.C, SURFACE MOUNTED, SIZE MINI-MELF,	VISHAY COMPONENTS	SMM0204-475R-1%50ppm
R14	24811/170	RESISTOR-FIXED METAL-FILM 750R +/- 1% 250mW 200V 50 ppm/DEG.C, SURFACE MOUNTED, SIZE MINI-MELF,	VISHAY COMPONENTS	SMM0204-750R-1%50ppm
R15	24811/149	RESISTOR-FIXED METAL-FILM 100R +/- 1% 250mW 200V 50 ppm/DEG.C, SURFACE MOUNTED, SIZE MINI-MELF,	VISHAY COMPONENTS	SMM0204-100R-1%50ppm
R16	24811/173	RESISTOR-FIXED METAL-FILM 1K +/- 1% 250mW 200V 50 ppm/DEG.C, SURFACE MOUNTED, SIZE MINI-MELF, (8mm	VISHAY COMPONENTS	SMM0204-1K0-1%-50ppm

Cir. Ref.	MI part number	Description	Manufacturer	Manufacturer's part number
90 MHz swept local oscillator A10 (contd.)				
R17 to R20	24811/165	RESISTOR-FIXED METAL-FILM 475R +/- 1% 250mW 200V 50 ppm/DEG.C, SURFACE MOUNTED, SIZE MINI-MELF,	VISHAY COMPONENTS	SMM0204-475R-1%50ppm
R21	24811/181	RESISTOR-FIXED METAL-FILM 2K21 +/- 1% 250mW 200V 50 ppm/DEG.C, SURFACE MOUNTED, SIZE MINI-MELF,	VISHAY COMPONENTS	SMM0204-2K21-1%50ppm
R22	24811/149	RESISTOR-FIXED METAL-FILM 100R +/- 1% 250mW 200V 50 ppm/DEG.C, SURFACE MOUNTED, SIZE MINI-MELF,	VISHAY COMPONENTS	SMM0204-100R-1%50ppm
R23	24811/173	RESISTOR-FIXED METAL-FILM 1K +/- 1% 250mW 200V 50 ppm/DEG.C, SURFACE MOUNTED, SIZE MINI-MELF, (8mm	VISHAY COMPONENTS	SMM0204-1K0-1%-50ppm
R24	24811/169	RESISTOR-FIXED METAL-FILM 681R +/- 1% 250mW 200V 50 ppm/DEG.C, SURFACE MOUNTED, SIZE MINI-MELF,	VISHAY COMPONENTS	SMM0204-681R-1%50ppm
R25	24811/125	RESISTOR-FIXED METAL-FILM 10R +/- 1% 250mW 200V 50 ppm/DEG.C, SURFACE MOUNTED, SIZE MINI-MELF, (8mm	VISHAY COMPONENTS	SMM0204-10R-1%-50ppm
R26	24811/173	RESISTOR-FIXED METAL-FILM 1K +/- 1% 250mW 200V 50 ppm/DEG.C, SURFACE MOUNTED, SIZE MINI-MELF, (8mm	VISHAY COMPONENTS	SMM0204-1K0-1%-50ppm
R27	24811/168	RESISTOR-FIXED METAL-FILM 619R +/- 1% 250mW 200V 50 ppm/DEG.C, SURFACE MOUNTED, SIZE MINI-MELF,	VISHAY COMPONENTS	SMM0204-619R-1%50ppm
R28	24811/169	RESISTOR-FIXED METAL-FILM 681R +/- 1% 250mW 200V 50 ppm/DEG.C, SURFACE MOUNTED, SIZE MINI-MELF,	VISHAY COMPONENTS	SMM0204-681R-1%50ppm
R33	24811/177	RESISTOR-FIXED METAL-FILM 1K5 +/- 1% 250mW 200V 50 ppm/DEG.C, SURFACE MOUNTED, SIZE MINI-MELF, (8mm	VISHAY COMPONENTS	SMM0204-1K5-1%50ppm
R34	24811/149	RESISTOR-FIXED METAL-FILM 100R +/- 1% 250mW 200V 50 ppm/DEG.C, SURFACE MOUNTED, SIZE MINI-MELF,	VISHAY COMPONENTS	SMM0204-100R-1%50ppm
R35	24811/194	RESISTOR-FIXED METAL-FILM 7K5 +/- 1% 250mW 200V 50 ppm/DEG.C, SURFACE MOUNTED, SIZE MINI-MELF, (8mm	VISHAY COMPONENTS	SMM0204-7K5-1%50ppm
R36	24811/194	RESISTOR-FIXED METAL-FILM 7K5 +/- 1% 250mW 200V 50 ppm/DEG.C, SURFACE MOUNTED, SIZE MINI-MELF, (8mm	VISHAY COMPONENTS	SMM0204-7K5-1%50ppm
R37	24811/149	RESISTOR-FIXED METAL-FILM 100R +/- 1% 250mW 200V 50 ppm/DEG.C, SURFACE MOUNTED, SIZE MINI-MELF,	VISHAY COMPONENTS	SMM0204-100R-1%50ppm
R38	24811/141	RESISTOR-FIXED METAL-FILM 47R5 +/- 1% 250mW 200V 50 ppm/DEG.C, SURFACE MOUNTED, SIZE MINI-MELF,	VISHAY COMPONENTS	SMM0204-47R5-1%50ppm
R39	24811/173	RESISTOR-FIXED METAL-FILM 1K +/- 1% 250mW 200V 50 ppm/DEG.C, SURFACE MOUNTED, SIZE MINI-MELF, (8mm	VISHAY COMPONENTS	SMM0204-1K0-1%-50ppm
R40	24811/157	RESISTOR-FIXED METAL-FILM 221R +/- 1% 250mW 200V 50 ppm/DEG.C, SURFACE MOUNTED, SIZE MINI-MELF,	VISHAY COMPONENTS	SMM0204-221R-1%50ppm
R41	24811/165	RESISTOR-FIXED METAL-FILM 475R +/- 1% 250mW 200V 50 ppm/DEG.C, SURFACE MOUNTED, SIZE MINI-MELF,	VISHAY COMPONENTS	SMM0204-475R-1%50ppm
R42	24811/181	RESISTOR-FIXED METAL-FILM 2K21 +/- 1% 250mW 200V 50 ppm/DEG.C, SURFACE MOUNTED, SIZE MINI-MELF,	VISHAY COMPONENTS	SMM0204-2K21-1%50ppm
R43	24811/149	RESISTOR-FIXED METAL-FILM 100R +/- 1% 250mW 200V 50 ppm/DEG.C, SURFACE MOUNTED, SIZE MINI-MELF,	VISHAY COMPONENTS	SMM0204-100R-1%50ppm
R44	24811/173	RESISTOR-FIXED METAL-FILM 1K +/- 1% 250mW 200V 50 ppm/DEG.C, SURFACE MOUNTED, SIZE MINI-MELF, (8mm	VISHAY COMPONENTS	SMM0204-1K0-1%-50ppm
TP3	23435/188	TERMINAL CONNECTOR-PIN, 0.64mm SQUARE, 5.97mm HIGH, PCB-MOUNTING, SINGLE-ENDED, PHOSPHOR BRONZE,	BERG ELECTRONICS	75401-001
TR1	28457/851	TRANSISTOR NPN BIPOLAR BFS17... 15V 1.3GHz 250mW 50mA 20hFE MIN @ 2mA, MARKING CODE E1, SURFACE	PHILIPS	BFS17
TR2	28487/817	TRANSISTOR PNP BIPOLAR BF569... 35V 900MHz 200mW 30mA 25hFE MIN @ 3mA, MARKING CODE G6 OR LH,	PHILIPS	BF569

Cir. Ref.	MI part number	Description	Manufacturer	Manufacturer's part number
90 MHz swept local oscillator A10 (contd.)				
TR3	28487/817	TRANSISTOR PNP BIPOLAR BF569... 35V 900MHz 200mW 30mA 25hFE MIN @ 3mA, MARKING CODE G6 OR LH,	PHILIPS	BF569
TR4	28457/851	TRANSISTOR NPN BIPOLAR BFS17... 15V 1.3GHz 250mW 50mA 20hFE MIN @ 2mA, MARKING CODE E1, SURFACE	PHILIPS	BFS17
TR5	28457/851	TRANSISTOR NPN BIPOLAR BFS17... 15V 1.3GHz 250mW 50mA 20hFE MIN @ 2mA, MARKING CODE E1, SURFACE	PHILIPS	BFS17

Cir. Ref.	MI part number	Description	Manufacturer	Manufacturer's part number

Input switch and power meter A11/1

When ordering, prefix circuit reference with A11/1.

	44830-163	Complete unit	Issue 1	
C1 to C5	26386/899	CAPACITOR-FIXED CERAMIC 100nF +/-10% 50V X7R/2C1, MULTILAYER, SURFACE-MOUNTED, SIZE 1206, NICKEL	ROHM ELECTRONICS LTD	MCH31-5C-104-KP
C7	26386/875	CAPACITOR-FIXED CERAMIC 10nF +/-10% 50V X7R/2C1, MULTILAYER, SURFACE-MOUNTED, SIZE 0805, NICKEL	ROHM ELECTRONICS LTD	MCH21-5C-103-KP
C9	26386/760	CAPACITOR-FIXED CERAMIC 220nF +/-10% 50V X7R MULTILAYER, SURFACE-MOUNTED, SIZE 1210, NICKEL	PHILIPS	1210-2R-224-K9-BBC
C10	26386/760	CAPACITOR-FIXED CERAMIC 220nF +/-10% 50V X7R MULTILAYER, SURFACE-MOUNTED, SIZE 1210, NICKEL	PHILIPS	1210-2R-224-K9-BBC
C11	26386/875	CAPACITOR-FIXED CERAMIC 10nF +/-10% 50V X7R/2C1, MULTILAYER, SURFACE-MOUNTED, SIZE 0805, NICKEL	ROHM ELECTRONICS LTD	MCH21-5C-103-KP
C12 to C16	26386/899	CAPACITOR-FIXED CERAMIC 100nF +/-10% 50V X7R/2C1, MULTILAYER, SURFACE-MOUNTED, SIZE 1206, NICKEL	ROHM ELECTRONICS LTD	MCH31-5C-104-KP
C17	26386/863	CAPACITOR-FIXED CERAMIC 1nF +/-10% 50V X7R/2C1, MULTILAYER, SURFACE-MOUNTED, SIZE 0805, NICKEL	ROHM ELECTRONICS LTD	MCH21-5C-102-KP
C18	26386/863	CAPACITOR-FIXED CERAMIC 1nF +/-10% 50V X7R/2C1, MULTILAYER, SURFACE-MOUNTED, SIZE 0805, NICKEL	ROHM ELECTRONICS LTD	MCH21-5C-102-KP
C19	26386/899	CAPACITOR-FIXED CERAMIC 100nF +/-10% 50V X7R/2C1, MULTILAYER, SURFACE-MOUNTED, SIZE 1206, NICKEL	ROHM ELECTRONICS LTD	MCH31-5C-104-KP
C20	26386/760	CAPACITOR-FIXED CERAMIC 220nF +/-10% 50V X7R MULTILAYER, SURFACE-MOUNTED, SIZE 1210, NICKEL	PHILIPS	1210-2R-224-K9-BBC
C21	26386/899	CAPACITOR-FIXED CERAMIC 100nF +/-10% 50V X7R/2C1, MULTILAYER, SURFACE-MOUNTED, SIZE 1206, NICKEL	ROHM ELECTRONICS LTD	MCH31-5C-104-KP
C22	26386/899	CAPACITOR-FIXED CERAMIC 100nF +/-10% 50V X7R/2C1, MULTILAYER, SURFACE-MOUNTED, SIZE 1206, NICKEL	ROHM ELECTRONICS LTD	MCH31-5C-104-KP
C23	26451/003	CAPACITOR-FIXED ALUMINIUM 10uF +/-20% 16V ELECTROLYTIC, SURFACE-MOUNTED, SIZE 4.3 x 4.3mm,	PANASONIC INDUSTRIAL	ECE-V-1CA-100R
C24	26451/014	CAPACITOR-FIXED ALUMINIUM 220uF +/-20% 16V ELECTROLYTIC, SURFACE-MOUNTED, SIZE 10.3 x 10.3mm,	PANASONIC INDUSTRIAL	ECE-V-1E-A-221-P
C25	26386/899	CAPACITOR-FIXED CERAMIC 100nF +/-10% 50V X7R/2C1, MULTILAYER, SURFACE-MOUNTED, SIZE 1206, NICKEL	ROHM ELECTRONICS LTD	MCH31-5C-104-KP
C26	26386/760	CAPACITOR-FIXED CERAMIC 220nF +/-10% 50V X7R MULTILAYER, SURFACE-MOUNTED, SIZE 1210, NICKEL	PHILIPS	1210-2R-224-K9-BBC
C27	26451/008	CAPACITOR-FIXED ALUMINIUM 47uF +/-20% 6.3V ELECTROLYTIC, SURFACE-MOUNTED, SIZE 5.3 x 5.3mm,	PANASONIC INDUSTRIAL	ECE-V-0JA-470P
C28	26386/875	CAPACITOR-FIXED CERAMIC 10nF +/-10% 50V X7R/2C1, MULTILAYER, SURFACE-MOUNTED, SIZE 0805, NICKEL	ROHM ELECTRONICS LTD	MCH21-5C-103-KP
C30 to C35	26386/863	CAPACITOR-FIXED CERAMIC 1nF +/-10% 50V X7R/2C1, MULTILAYER, SURFACE-MOUNTED, SIZE 0805, NICKEL	ROHM ELECTRONICS LTD	MCH21-5C-102-KP
C43	26386/875	CAPACITOR-FIXED CERAMIC 10nF +/-10% 50V X7R/2C1, MULTILAYER, SURFACE-MOUNTED, SIZE 0805, NICKEL	ROHM ELECTRONICS LTD	MCH21-5C-103-KP
C44	26386/875	CAPACITOR-FIXED CERAMIC 10nF +/-10% 50V X7R/2C1, MULTILAYER, SURFACE-MOUNTED, SIZE 0805, NICKEL	ROHM ELECTRONICS LTD	MCH21-5C-103-KP
C49	26386/863	CAPACITOR-FIXED CERAMIC 1nF +/-10% 50V X7R/2C1, MULTILAYER, SURFACE-MOUNTED, SIZE 0805, NICKEL	ROHM ELECTRONICS LTD	MCH21-5C-102-KP
C50	26386/863	CAPACITOR-FIXED CERAMIC 1nF +/-10% 50V X7R/2C1, MULTILAYER, SURFACE-MOUNTED, SIZE 0805, NICKEL	ROHM ELECTRONICS LTD	MCH21-5C-102-KP

Cir. Ref.	MI part number	Description	Manufacturer	Manufacturer's part number
Input switch and power meter A11/1 (contd.)				
C51 to C60	26386/830	CAPACITOR-FIXED CERAMIC 330pF +/-5% 50V NP0 MULTILAYER, SURFACE-MOUNTED, SIZE 0805, NICKEL	ROHM ELECTRONICS LTD	MCH21-5A-331-JP
D7	28383/903	DIODE SMALL-SIGNAL, BAV99... DUAL, 70V 100mA 1.1Vf @ 50mA, IN SERIES, MARKING CODE A7, SURFACE	PHILIPS	BAV99 (A7)
D8	28349/030	DIODE SMALL-SIGNAL, SCHOTTKY, BAS85... 30V 200mA 10pF 0.4Vf @ 10mA, GREY BAND MARK, SURFACE	PHILIPS	BAS85
D9	28371/443	DIODE ZENER, BZX84-C5V6... 350mW 5.6V 5% 250mA MARKING CODE Z3, SURFACE MOUNTED, SOT-23, (8mm	PHILIPS	BZX84-C5V6
D10	28383/939	DIODE MIXER/DETECTOR, SCHOTTKY, BAT63... DUAL, 3V 100mA 0.65pF 0.19V @1mA, ELEC ISOLATD, MARKNG CODE	SIEMENS LTD	BAT63 (TAPED)
D12	28349/022	DIODE SMALL-SIGNAL, SCHOTTKY, HSMS-2812... DUAL, 20V 1.2pF 410mVf @ 1mA, IN SERIES, MARKING CODE	HEWLETT-PACKARD	HSMS-2812-L31
D13	28383/909	DIODE SMALL-SIGNAL, SCHOTTKY, HSMS-2822... DUAL, 8V 1pF 340mVf @ 1mA, IN SERIES, MARKING CODE C2,	HEWLETT-PACKARD	HSMS-2822-L31
D16	28349/022	DIODE SMALL-SIGNAL, SCHOTTKY, HSMS-2812... DUAL, 20V 1.2pF 410mVf @ 1mA, IN SERIES, MARKING CODE	HEWLETT-PACKARD	HSMS-2812-L31
D18	28383/909	DIODE SMALL-SIGNAL, SCHOTTKY, HSMS-2822... DUAL, 8V 1pF 340mVf @ 1mA, IN SERIES, MARKING CODE C2,	HEWLETT-PACKARD	HSMS-2822-L31
D20	28371/302	DIODE ZENER, BZX84-C4V7... 350mW 4.7V 5% 250mA MARKING CODE Z1, SURFACE MOUNTED, SOT-23, (8mm	PHILIPS	BZX84-C4V7
D21 to D24	28383/930	DIODE SMALL-SIGNAL, BAS16... 330mW 75V 250mA 2pF 1Vf @ 50mA, MARKING CODE A6, SURFACE MOUNTED,	PHILIPS	BAS16
IC1	28461/809	IC-ANALOGUE OPERATIONAL AMP TLC2652A... SINGLE, 8V CHOPPER STABILIZED, OFFSET 1.0uV MAX, OFFSET TEMP	TEXAS INSTRUMENTS	TLC2652ACP
IC2	28461/349	IC-ANALOGUE OPERATIONAL AMP TL074... QUAD, JFET-INPUT, LINEAR, 14 PIN, DUAL-IN-LINE.	MOTOROLA INC.	TL074CN
IC3	28461/901	TRANSISTOR NPN BIPOLAR CA3046... ARRAY, 20V 50mA 5-TRANSISTORS, 3-SINGLES & 1-PAIR, 14 PIN,	NAT. SEMICONDUCTOR	LM3046N
IC4	28461/901	TRANSISTOR NPN BIPOLAR CA3046... ARRAY, 20V 50mA 5-TRANSISTORS, 3-SINGLES & 1-PAIR, 14 PIN,	NAT. SEMICONDUCTOR	LM3046N
IC6	28461/780	IC-ANALOGUE VOLTAGE-REGULATOR 79L05AC... 5V 100mA NEGATIVE, LINEAR, 5% REGULATION, MONOLITHIC, 8	NAT. SEMICONDUCTOR	LM79L05ACM
PLA	23435/188	TERMINAL CONNECTOR-PIN, 0.64mm SQUARE, 5.97mm HIGH, PCB-MOUNTING, SINGLE-ENDED, PHOSPHOR BRONZE,	BERG ELECTRONICS	75401-001
PLC	23435/188	TERMINAL CONNECTOR-PIN, 0.64mm SQUARE, 5.97mm HIGH, PCB-MOUNTING, SINGLE-ENDED, PHOSPHOR BRONZE,	BERG ELECTRONICS	75401-001
R15	24811/173	RESISTOR-FIXED METAL-FILM 1K +/- 1% 250mW 200V 50 ppm/DEG.C, SURFACE MOUNTED, SIZE MINI-MELF, (8mm	VISHAY COMPONENTS	SMM0204-1K0-1%-50ppm
R16	24811/173	RESISTOR-FIXED METAL-FILM 1K +/- 1% 250mW 200V 50 ppm/DEG.C, SURFACE MOUNTED, SIZE MINI-MELF, (8mm	VISHAY COMPONENTS	SMM0204-1K0-1%-50ppm
R18	24811/909	RESISTOR-FIXED METAL-FILM 51R1 +/- 1% 250mW 200V 50 ppm/DEG.C, LOW-INDUCTANCE, SURFACE MOUNTED,	VISHAY COMPONENTS	SMM0204-HF-51R1-1%

Cir. Ref.	MI part number	Description	Manufacturer	Manufacturer's part number
Input switch and power meter A11/1 (contd.)				
R19	24811/909	RESISTOR-FIXED METAL-FILM 51R1 +/- 1% 250mW 200V 50 ppm/DEG.C, LOW-INDUCTANCE, SURFACE MOUNTED,	VISHAY COMPONENTS	SMM0204-HF-51R1-1%
R22	24811/901	RESISTOR-FIXED METAL-FILM 10R +/- 1% 250mW 200V 50 ppm/DEG.C, LOW-INDUCTANCE, SURFACE MOUNTED, SIZE	VISHAY COMPONENTS	SMM0204-HF-10R-1%
R23	24811/901	RESISTOR-FIXED METAL-FILM 10R +/- 1% 250mW 200V 50 ppm/DEG.C, LOW-INDUCTANCE, SURFACE MOUNTED, SIZE	VISHAY COMPONENTS	SMM0204-HF-10R-1%
R24	24811/602	RESISTOR-FIXED METAL-FILM 10K +/- 0.1% 250mW 200V 15 ppm/DEG.C, SURFACE MOUNTED, SIZE MINI-MELF,	VISHAY COMPONENTS	SMM0204-10K0-0.1%-15
R25	24811/602	RESISTOR-FIXED METAL-FILM 10K +/- 0.1% 250mW 200V 15 ppm/DEG.C, SURFACE MOUNTED, SIZE MINI-MELF,	VISHAY COMPONENTS	SMM0204-10K0-0.1%-15
R27	24811/125	RESISTOR-FIXED METAL-FILM 10R +/- 1% 250mW 200V 50 ppm/DEG.C, SURFACE MOUNTED, SIZE MINI-MELF, (8mm	VISHAY COMPONENTS	SMM0204-10R-1%-50ppm
R31	24811/197	RESISTOR-FIXED METAL-FILM 10K +/- 1% 250mW 200V 50 ppm/DEG.C, SURFACE MOUNTED, SIZE MINI-MELF, (8mm	VISHAY COMPONENTS	SMM0204-10K-1%50ppm
R32	24811/204	RESISTOR-FIXED METAL-FILM 20K +/- 1% 250mW 200V 50 ppm/DEG.C, SURFACE MOUNTED, SIZE MINI-MELF, (8mm	VISHAY COMPONENTS	SMM0204-20K-1%50ppm
R33	24811/191	RESISTOR-FIXED METAL-FILM 5K62 +/- 1% 250mW 200V 50 ppm/DEG.C, SURFACE MOUNTED, SIZE MINI-MELF,	VISHAY COMPONENTS	SMM0204-5K62-1%50ppm
R34	24811/125	RESISTOR-FIXED METAL-FILM 10R +/- 1% 250mW 200V 50 ppm/DEG.C, SURFACE MOUNTED, SIZE MINI-MELF, (8mm	VISHAY COMPONENTS	SMM0204-10R-1%-50ppm
R35	24811/211	RESISTOR-FIXED METAL-FILM 39K2 +/- 1% 250mW 200V 50 ppm/DEG.C, SURFACE MOUNTED, SIZE MINI-MELF,	VISHAY COMPONENTS	SMM0204-39K2-1%50ppm
R36	24811/213	RESISTOR-FIXED METAL-FILM 47K5 +/- 1% 250mW 200V 50 ppm/DEG.C, SURFACE MOUNTED, SIZE MINI-MELF,	VISHAY COMPONENTS	SMM0204-47K5-1%50ppm
R37	24811/213	RESISTOR-FIXED METAL-FILM 47K5 +/- 1% 250mW 200V 50 ppm/DEG.C, SURFACE MOUNTED, SIZE MINI-MELF,	VISHAY COMPONENTS	SMM0204-47K5-1%50ppm
R40	24811/237	RESISTOR-FIXED METAL-FILM 475K +/- 1% 250mW 200V 50 ppm/DEG.C, SURFACE MOUNTED, SIZE MINI-MELF,	VISHAY COMPONENTS	SMM0204-475K-1%50ppm
R41	24811/173	RESISTOR-FIXED METAL-FILM 1K +/- 1% 250mW 200V 50 ppm/DEG.C, SURFACE MOUNTED, SIZE MINI-MELF, (8mm	VISHAY COMPONENTS	SMM0204-1K0-1%-50ppm
R42 to R45	24811/201	RESISTOR-FIXED METAL-FILM 15K +/- 1% 250mW 200V 50 ppm/DEG.C, SURFACE MOUNTED, SIZE MINI-MELF, (8mm	VISHAY COMPONENTS	SMM0204-15K-1%50ppm
R47 to R51	24811/173	RESISTOR-FIXED METAL-FILM 1K +/- 1% 250mW 200V 50 ppm/DEG.C, SURFACE MOUNTED, SIZE MINI-MELF, (8mm	VISHAY COMPONENTS	SMM0204-1K0-1%-50ppm
R52	24811/201	RESISTOR-FIXED METAL-FILM 15K +/- 1% 250mW 200V 50 ppm/DEG.C, SURFACE MOUNTED, SIZE MINI-MELF, (8mm	VISHAY COMPONENTS	SMM0204-15K-1%50ppm
R54	24811/173	RESISTOR-FIXED METAL-FILM 1K +/- 1% 250mW 200V 50 ppm/DEG.C, SURFACE MOUNTED, SIZE MINI-MELF, (8mm	VISHAY COMPONENTS	SMM0204-1K0-1%-50ppm
R55	24811/173	RESISTOR-FIXED METAL-FILM 1K +/- 1% 250mW 200V 50 ppm/DEG.C, SURFACE MOUNTED, SIZE MINI-MELF, (8mm	VISHAY COMPONENTS	SMM0204-1K0-1%-50ppm
R57	24811/197	RESISTOR-FIXED METAL-FILM 10K +/- 1% 250mW 200V 50 ppm/DEG.C, SURFACE MOUNTED, SIZE MINI-MELF, (8mm	VISHAY COMPONENTS	SMM0204-10K-1%50ppm
R58	24811/197	RESISTOR-FIXED METAL-FILM 10K +/- 1% 250mW 200V 50 ppm/DEG.C, SURFACE MOUNTED, SIZE MINI-MELF, (8mm	VISHAY COMPONENTS	SMM0204-10K-1%50ppm
R59	24811/213	RESISTOR-FIXED METAL-FILM 47K5 +/- 1% 250mW 200V 50 ppm/DEG.C, SURFACE MOUNTED, SIZE MINI-MELF,	VISHAY COMPONENTS	SMM0204-47K5-1%50ppm
R60	24811/201	RESISTOR-FIXED METAL-FILM 15K +/- 1% 250mW 200V 50 ppm/DEG.C, SURFACE MOUNTED, SIZE MINI-MELF, (8mm	VISHAY COMPONENTS	SMM0204-15K-1%50ppm
R61	24811/177	RESISTOR-FIXED METAL-FILM 1K5 +/- 1% 250mW 200V 50 ppm/DEG.C, SURFACE MOUNTED, SIZE MINI-MELF, (8mm	VISHAY COMPONENTS	SMM0204-1K5-1%50ppm
R63	24811/208	RESISTOR-FIXED METAL-FILM 30K1 +/- 1% 250mW 200V 50 ppm/DEG.C, SURFACE MOUNTED, SIZE MINI-MELF,	VISHAY COMPONENTS	SMM0204-30K1-1%50ppm

Cir. Ref.	MI part number	Description	Manufacturer	Manufacturer's part number
Input switch and power meter A11/1 (contd.)				
R65	24811/213	RESISTOR-FIXED METAL-FILM 47K5 +/- 1% 250mW 200V 50 ppm/DEG.C, SURFACE MOUNTED, SIZE MINI-MELF,	VISHAY COMPONENTS	SMM0204-47K5-1%50ppm
R67	24811/197	RESISTOR-FIXED METAL-FILM 10K +/- 1% 250mW 200V 50 ppm/DEG.C, SURFACE MOUNTED, SIZE MINI-MELF, (8mm	VISHAY COMPONENTS	SMM0204-10K-1%50ppm
R68	24811/161	RESISTOR-FIXED METAL-FILM 332R +/- 1% 250mW 200V 50 ppm/DEG.C, SURFACE MOUNTED, SIZE MINI-MELF,	VISHAY COMPONENTS	SMM0204-332R-1%50ppm
R69	24811/208	RESISTOR-FIXED METAL-FILM 30K1 +/- 1% 250mW 200V 50 ppm/DEG.C, SURFACE MOUNTED, SIZE MINI-MELF,	VISHAY COMPONENTS	SMM0204-30K1-1%50ppm
R70	24811/125	RESISTOR-FIXED METAL-FILM 10R +/- 1% 250mW 200V 50 ppm/DEG.C, SURFACE MOUNTED, SIZE MINI-MELF, (8mm	VISHAY COMPONENTS	SMM0204-10R-1%-50ppm
R71	24811/197	RESISTOR-FIXED METAL-FILM 10K +/- 1% 250mW 200V 50 ppm/DEG.C, SURFACE MOUNTED, SIZE MINI-MELF, (8mm	VISHAY COMPONENTS	SMM0204-10K-1%50ppm
R72	24811/173	RESISTOR-FIXED METAL-FILM 1K +/- 1% 250mW 200V 50 ppm/DEG.C, SURFACE MOUNTED, SIZE MINI-MELF, (8mm	VISHAY COMPONENTS	SMM0204-1K0-1%-50ppm
R73	24811/161	RESISTOR-FIXED METAL-FILM 332R +/- 1% 250mW 200V 50 ppm/DEG.C, SURFACE MOUNTED, SIZE MINI-MELF,	VISHAY COMPONENTS	SMM0204-332R-1%50ppm
R74	24811/185	RESISTOR-FIXED METAL-FILM 3K32 +/- 1% 250mW 200V 50 ppm/DEG.C, SURFACE MOUNTED, SIZE MINI-MELF,	VISHAY COMPONENTS	SMM0204-3K32-1%50ppm
R75 to R79	24811/912	RESISTOR-FIXED METAL-FILM 100R +/- 1% 250mW 200V 50 ppm/DEG.C, LOW-INDUCTANCE, SURFACE MOUNTED,	VISHAY COMPONENTS	SMM0204-HF-100R-1%
R80	24811/185	RESISTOR-FIXED METAL-FILM 3K32 +/- 1% 250mW 200V 50 ppm/DEG.C, SURFACE MOUNTED, SIZE MINI-MELF,	VISHAY COMPONENTS	SMM0204-3K32-1%50ppm
R81	24811/161	RESISTOR-FIXED METAL-FILM 332R +/- 1% 250mW 200V 50 ppm/DEG.C, SURFACE MOUNTED, SIZE MINI-MELF,	VISHAY COMPONENTS	SMM0204-332R-1%50ppm
R82	24811/245	RESISTOR-FIXED METAL-FILM 1M +/- 1% 250mW 200V 50 ppm/DEG.C, SURFACE MOUNTED, SIZE MINI-MELF, (8mm	VISHAY COMPONENTS	SMM0204-1M0-1%50ppm
R83 to R86	24811/173	RESISTOR-FIXED METAL-FILM 1K +/- 1% 250mW 200V 50 ppm/DEG.C, SURFACE MOUNTED, SIZE MINI-MELF, (8mm	VISHAY COMPONENTS	SMM0204-1K0-1%-50ppm
R88	24811/923	RESISTOR-FIXED METAL-FILM 68R1 +/- 1% 250mW 200V 50 ppm/DEG.C, LOW-INDUCTANCE, SURFACE MOUNTED,	VISHAY COMPONENTS	SMM0204-HF-68R1-1%
R89	24811/924	RESISTOR-FIXED METAL-FILM 182R +/- 1% 250mW 200V 50 ppm/DEG.C, LOW-INDUCTANCE, SURFACE MOUNTED,	VISHAY COMPONENTS	SMM0204-HF-182R-1%
R100	24811/173	RESISTOR-FIXED METAL-FILM 1K +/- 1% 250mW 200V 50 ppm/DEG.C, SURFACE MOUNTED, SIZE MINI-MELF, (8mm	VISHAY COMPONENTS	SMM0204-1K0-1%-50ppm
R101	24811/181	RESISTOR-FIXED METAL-FILM 2K21 +/- 1% 250mW 200V 50 ppm/DEG.C, SURFACE MOUNTED, SIZE MINI-MELF,	VISHAY COMPONENTS	SMM0204-2K21-1%50ppm
R102	24811/173	RESISTOR-FIXED METAL-FILM 1K +/- 1% 250mW 200V 50 ppm/DEG.C, SURFACE MOUNTED, SIZE MINI-MELF, (8mm	VISHAY COMPONENTS	SMM0204-1K0-1%-50ppm
R104	24811/173	RESISTOR-FIXED METAL-FILM 1K +/- 1% 250mW 200V 50 ppm/DEG.C, SURFACE MOUNTED, SIZE MINI-MELF, (8mm	VISHAY COMPONENTS	SMM0204-1K0-1%-50ppm
R105	24811/181	RESISTOR-FIXED METAL-FILM 2K21 +/- 1% 250mW 200V 50 ppm/DEG.C, SURFACE MOUNTED, SIZE MINI-MELF,	VISHAY COMPONENTS	SMM0204-2K21-1%50ppm
R106	24811/173	RESISTOR-FIXED METAL-FILM 1K +/- 1% 250mW 200V 50 ppm/DEG.C, SURFACE MOUNTED, SIZE MINI-MELF, (8mm	VISHAY COMPONENTS	SMM0204-1K0-1%-50ppm
R107	24811/181	RESISTOR-FIXED METAL-FILM 2K21 +/- 1% 250mW 200V 50 ppm/DEG.C, SURFACE MOUNTED, SIZE MINI-MELF,	VISHAY COMPONENTS	SMM0204-2K21-1%50ppm
R110 to R112	24811/909	RESISTOR-FIXED METAL-FILM 51R1 +/- 1% 250mW 200V 50 ppm/DEG.C, LOW-INDUCTANCE, SURFACE MOUNTED,	VISHAY COMPONENTS	SMM0204-HF-51R1-1%
R120	24811/930	RESISTOR-FIXED METAL-FILM 200R +/- 1% 250mW 200V 50 ppm/DEG.C, LOW-INDUCTANCE, SURFACE MOUNTED,	VISHAY COMPONENTS	SMM0204-HF-200R-1%
R121	24811/930	RESISTOR-FIXED METAL-FILM 200R +/- 1% 250mW 200V 50 ppm/DEG.C, LOW-INDUCTANCE, SURFACE MOUNTED,	VISHAY COMPONENTS	SMM0204-HF-200R-1%

Cir. Ref.	MI part number	Description	Manufacturer	Manufacturer's part number
Input switch and power meter A11/1 (contd.)				
R122	24811/915	RESISTOR-FIXED METAL-FILM 150R +/- 1% 250mW 200V 50 ppm/DEG.C, LOW-INDUCTANCE, SURFACE MOUNTED,	VISHAY COMPONENTS	SMM0204-HF-150R-1%
R123	24811/915	RESISTOR-FIXED METAL-FILM 150R +/- 1% 250mW 200V 50 ppm/DEG.C, LOW-INDUCTANCE, SURFACE MOUNTED,	VISHAY COMPONENTS	SMM0204-HF-150R-1%
R124	24811/912	RESISTOR-FIXED METAL-FILM 100R +/- 1% 250mW 200V 50 ppm/DEG.C, LOW-INDUCTANCE, SURFACE MOUNTED,	VISHAY COMPONENTS	SMM0204-HF-100R-1%
R130	24811/930	RESISTOR-FIXED METAL-FILM 200R +/- 1% 250mW 200V 50 ppm/DEG.C, LOW-INDUCTANCE, SURFACE MOUNTED,	VISHAY COMPONENTS	SMM0204-HF-200R-1%
R131	24811/930	RESISTOR-FIXED METAL-FILM 200R +/- 1% 250mW 200V 50 ppm/DEG.C, LOW-INDUCTANCE, SURFACE MOUNTED,	VISHAY COMPONENTS	SMM0204-HF-200R-1%
R132	24811/915	RESISTOR-FIXED METAL-FILM 150R +/- 1% 250mW 200V 50 ppm/DEG.C, LOW-INDUCTANCE, SURFACE MOUNTED,	VISHAY COMPONENTS	SMM0204-HF-150R-1%
R133	24811/915	RESISTOR-FIXED METAL-FILM 150R +/- 1% 250mW 200V 50 ppm/DEG.C, LOW-INDUCTANCE, SURFACE MOUNTED,	VISHAY COMPONENTS	SMM0204-HF-150R-1%
R134	24811/912	RESISTOR-FIXED METAL-FILM 100R +/- 1% 250mW 200V 50 ppm/DEG.C, LOW-INDUCTANCE, SURFACE MOUNTED,	VISHAY COMPONENTS	SMM0204-HF-100R-1%
RLA to RLH	23486/182	RELAY MAGNETIC, SINGLE-POLE CHANGEOVER, POLARISED SINGLE 5V COIL, 125R - ISOL 60dB @ 1.8GHz, MI	MATSUSHITA CONTROLS	RK1-5V-H22
TP1	23435/188	TERMINAL CONNECTOR-PIN, 0.64mm SQUARE, 5.97mm HIGH, PCB-MOUNTING, SINGLE-ENDED, PHOSPHOR BRONZE,	BERG ELECTRONICS	75401-001
TP2	23435/188	TERMINAL CONNECTOR-PIN, 0.64mm SQUARE, 5.97mm HIGH, PCB-MOUNTING, SINGLE-ENDED, PHOSPHOR BRONZE,	BERG ELECTRONICS	75401-001
TR1 to TR4	28435/241	TRANSISTOR PNP BIPOLAR BCX17... 45V 100MHz 425mW 500mA 100hFE MIN @ 100mA, MARKING CODE T1, SURFACE	PHILIPS	BCX17

Cir. Ref.	MI part number	Description	Manufacturer	Manufacturer's part number

SSB demodulator A15

When ordering, prefix circuit reference with A15.

	44830-021	Complete unit	Issue 2	
C1	26386/875	CAPACITOR-FIXED CERAMIC 10nF +/-10% 50V X7R/2C1, MULTILAYER, SURFACE-MOUNTED, SIZE 0805, NICKEL	ROHM ELECTRONICS LTD	MCH21-5C-103-KP
C2	26386/824	CAPACITOR-FIXED CERAMIC 100pF +/-5% 50V NP0 MULTILAYER, SURFACE-MOUNTED, SIZE 0805, NICKEL	ROHM ELECTRONICS LTD	MCH21-5A-101-JP
C3 to C5	26386/875	CAPACITOR-FIXED CERAMIC 10nF +/-10% 50V X7R/2C1, MULTILAYER, SURFACE-MOUNTED, SIZE 0805, NICKEL	ROHM ELECTRONICS LTD	MCH21-5C-103-KP
C6	26386/760	CAPACITOR-FIXED CERAMIC 220nF +/-10% 50V X7R MULTILAYER, SURFACE-MOUNTED, SIZE 1210, NICKEL	PHILIPS	1210-2R-224-K9-BB
C7	26386/828	CAPACITOR-FIXED CERAMIC 220pF +/-5% 50V NP0 MULTILAYER, SURFACE-MOUNTED, SIZE 0805, NICKEL	ROHM ELECTRONICS LTD	MCH21-5A-221-JP
C8	26386/828	CAPACITOR-FIXED CERAMIC 220pF +/-5% 50V NP0 MULTILAYER, SURFACE-MOUNTED, SIZE 0805, NICKEL	ROHM ELECTRONICS LTD	MCH21-5A-221-JP
C9	26386/875	CAPACITOR-FIXED CERAMIC 10nF +/-10% 50V X7R/2C1, MULTILAYER, SURFACE-MOUNTED, SIZE 0805, NICKEL	ROHM ELECTRONICS LTD	MCH21-5C-103-KP
C10	26451/001	CAPACITOR-FIXED ALUMINIUM 1uF +/-20% 50V ELECTROLYTIC, SURFACE-MOUNTED, SIZE 4.3 x 4.3mm,	PANASONIC INDUSTRIAL	ECE-V-1HA-010R
C11	26386/760	CAPACITOR-FIXED CERAMIC 220nF +/-10% 50V X7R MULTILAYER, SURFACE-MOUNTED, SIZE 1210, NICKEL	PHILIPS	1210-2R-224-K9-BB
C12	26386/875	CAPACITOR-FIXED CERAMIC 10nF +/-10% 50V X7R/2C1, MULTILAYER, SURFACE-MOUNTED, SIZE 0805, NICKEL	ROHM ELECTRONICS LTD	MCH21-5C-103-KP
C13	26451/004	CAPACITOR-FIXED ALUMINIUM 10uF +/-20% 35V ELECTROLYTIC, SURFACE-MOUNTED, SIZE 5.3 x 5.3mm,	RUBYCON CAPACITORS	35-REV-10
C14	26386/828	CAPACITOR-FIXED CERAMIC 220pF +/-5% 50V NP0 MULTILAYER, SURFACE-MOUNTED, SIZE 0805, NICKEL	ROHM ELECTRONICS LTD	MCH21-5A-221-JP
C15	26386/760	CAPACITOR-FIXED CERAMIC 220nF +/-10% 50V X7R MULTILAYER, SURFACE-MOUNTED, SIZE 1210, NICKEL	PHILIPS	1210-2R-224-K9-BB
C16	26386/875	CAPACITOR-FIXED CERAMIC 10nF +/-10% 50V X7R/2C1, MULTILAYER, SURFACE-MOUNTED, SIZE 0805, NICKEL	ROHM ELECTRONICS LTD	MCH21-5C-103-KP
C17	26386/875	CAPACITOR-FIXED CERAMIC 10nF +/-10% 50V X7R/2C1, MULTILAYER, SURFACE-MOUNTED, SIZE 0805, NICKEL	ROHM ELECTRONICS LTD	MCH21-5C-103-KP
C18	26451/001	CAPACITOR-FIXED ALUMINIUM 1uF +/-20% 50V ELECTROLYTIC, SURFACE-MOUNTED, SIZE 4.3 x 4.3mm,	PANASONIC INDUSTRIAL	ECE-V-1HA-010R
C19	26386/992	CAPACITOR-FIXED CERAMIC 330nF +/-10% 50V X7R, MULTILAYER, SURFACE-MOUNTED, SIZE 1812, NICKEL	PHILIPS	1812-2B-334-K9BB
C20	26386/992	CAPACITOR-FIXED CERAMIC 330nF +/-10% 50V X7R, MULTILAYER, SURFACE-MOUNTED, SIZE 1812, NICKEL	PHILIPS	1812-2B-334-K9BB
C21	26421/142	CAPACITOR-FIXED ALUMINIUM 220uF +/-20% 16V ELECTROLYTIC, RADIAL, 5mm PWP, (TAPED).	PANASONIC INDUSTRIAL	ECE-A-1CU-221B
C22	26386/899	CAPACITOR-FIXED CERAMIC 100nF +/-10% 50V X7R/2C1, MULTILAYER, SURFACE-MOUNTED, SIZE 1206, NICKEL	ROHM ELECTRONICS LTD	MCH31-5C-104-KP
C23	26386/899	CAPACITOR-FIXED CERAMIC 100nF +/-10% 50V X7R/2C1, MULTILAYER, SURFACE-MOUNTED, SIZE 1206, NICKEL	ROHM ELECTRONICS LTD	MCH31-5C-104-KP
C24	26386/992	CAPACITOR-FIXED CERAMIC 330nF +/-10% 50V X7R, MULTILAYER, SURFACE-MOUNTED, SIZE 1812, NICKEL	PHILIPS	1812-2B-334-K9BB
C25	26386/899	CAPACITOR-FIXED CERAMIC 100nF +/-10% 50V X7R/2C1, MULTILAYER, SURFACE-MOUNTED, SIZE 1206, NICKEL	ROHM ELECTRONICS LTD	MCH31-5C-104-KP

Cir. Ref.	MI part number	Description	Manufacturer	Manufacturer's part number
SSB demodulator A15 (contd.)				
C26	26386/992	CAPACITOR-FIXED CERAMIC 330nF +/-10% 50V X7R, MULTILAYER, SURFACE-MOUNTED, SIZE 1812, NICKEL	PHILIPS	1812-2B-334-K9BB
C27	26386/863	CAPACITOR-FIXED CERAMIC 1nF +/-10% 50V X7R/2C1, MULTILAYER, SURFACE-MOUNTED, SIZE 0805, NICKEL	ROHM ELECTRONICS LTD	MCH21-5C-102-KP
D1	28383/934	DIODE SMALL-SIGNAL, LL4148... 500mW 50V 150mA 1Vf @ 10mA, SURFACE MOUNTED, MINI-MELF, (8mm TAPE -	PHILIPS	PMLL4148L
D2	28383/934	DIODE SMALL-SIGNAL, LL4148... 500mW 50V 150mA 1Vf @ 10mA, SURFACE MOUNTED, MINI-MELF, (8mm TAPE -	PHILIPS	PMLL4148L
IC1	28531/023	RF-MIXER DOUBLE-BALANCED, NE602A... >14dB GAIN @ 45MHz, 500MHz TYP SIG FREQ, 1K5 -15dBM INTERCEPT,	PHILIPS	NE602AD
IC2	28531/023	RF-MIXER DOUBLE-BALANCED, NE602A... >14dB GAIN @ 45MHz, 500MHz TYP SIG FREQ, 1K5 -15dBM INTERCEPT,	PHILIPS	NE602AD
IC3	28464/189	IC-DIGITAL COUNTER 74HC393... 4 BIT, DUAL, BINARY RIPPLE, CMOS-H/SPEED, 14 PIN, SMALL-OUTLINE.	PHILIPS	74HC393D
IC4	28461/412	IC-ANALOGUE OPERATIONAL AMP TL072... DUAL, 18V UNITY GAIN BNDWDTH 3MHz, OFFSET VOLTAGE 10mV, SLEW	MOTOROLA INC.	TL072CD
IC5	28461/741	IC-ANALOGUE VOLTAGE-REGULATOR LM317L... 37V 100mA POSITIVE ADJUSTABLE, LINEAR, MONOLITHIC, 3 PIN,	NAT. SEMICONDUCTOR	LM317LZ
L1	23642/564	INDUCTOR-FIXED 330uH +/- 10% COATED-LACQUER, MINIATURE, 95mA 22R MAX, 45 Q @ 0.79 MHz, 3.3 MHz	MEGGITT ELECTRONICS	C12-406/8/27471/010
L2	23642/567	INDUCTOR-FIXED 1mH +/- 10% COATED-LACQUER, MINIATURE, 70mA 40R MAX, 40 Q @ 0.79 MHz, 2.2 MHz	MEGGITT ELECTRONICS	C12-406/8/27471/016
L3	23642/564	INDUCTOR-FIXED 330uH +/- 10% COATED-LACQUER, MINIATURE, 95mA 22R MAX, 45 Q @ 0.79 MHz, 3.3 MHz	MEGGITT ELECTRONICS	C12-406/8/27471/010
PLA	23435/188	TERMINAL CONNECTOR-PIN, 0.64mm SQUARE, 5.97mm HIGH, PCB-MOUNTING, SINGLE-ENDED, PHOSPHOR BRONZE,	BERG ELECTRONICS	75401-001
PLB	23435/188	TERMINAL CONNECTOR-PIN, 0.64mm SQUARE, 5.97mm HIGH, PCB-MOUNTING, SINGLE-ENDED, PHOSPHOR BRONZE,	BERG ELECTRONICS	75401-001
R1	24811/156	RESISTOR-FIXED METAL-FILM 200R +/- 1% 250mW 200V 50 ppm/DEG.C, SURFACE MOUNTED, SIZE MINI-MELF,	VISHAY COMPONENTS	SMM0204-200R-1%50ppm
R2	24811/221	RESISTOR-FIXED METAL-FILM 100K +/- 1% 250mW 200V 50 ppm/DEG.C, SURFACE MOUNTED, SIZE MINI-MELF,	VISHAY COMPONENTS	SMM0204-100K-1%50ppm
R3	24811/161	RESISTOR-FIXED METAL-FILM 332R +/- 1% 250mW 200V 50 ppm/DEG.C, SURFACE MOUNTED, SIZE MINI-MELF,	VISHAY COMPONENTS	SMM0204-332R-1%50ppm
R4	24811/181	RESISTOR-FIXED METAL-FILM 2K21 +/- 1% 250mW 200V 50 ppm/DEG.C, SURFACE MOUNTED, SIZE MINI-MELF,	VISHAY COMPONENTS	SMM0204-2K21-1%50ppm
R5	24811/125	RESISTOR-FIXED METAL-FILM 10R +/- 1% 250mW 200V 50 ppm/DEG.C, SURFACE MOUNTED, SIZE MINI-MELF, (8mm	VISHAY COMPONENTS	SMM0204-10R-1%-50ppm
R6	24811/125	RESISTOR-FIXED METAL-FILM 10R +/- 1% 250mW 200V 50 ppm/DEG.C, SURFACE MOUNTED, SIZE MINI-MELF, (8mm	VISHAY COMPONENTS	SMM0204-10R-1%-50ppm

Cir. Ref.	MI part number	Description	Manufacturer	Manufacturer's part number
SSB demodulator A15 (contd.)				
R7	24811/149	RESISTOR-FIXED METAL-FILM 100R +/- 1% 250mW 200V 50 ppm/DEG.C, SURFACE MOUNTED, SIZE MINI-MELF,	VISHAY COMPONENTS	SMM0204-100R-1%50ppm
R8	24811/149	RESISTOR-FIXED METAL-FILM 100R +/- 1% 250mW 200V 50 ppm/DEG.C, SURFACE MOUNTED, SIZE MINI-MELF,	VISHAY COMPONENTS	SMM0204-100R-1%50ppm
R9	24811/213	RESISTOR-FIXED METAL-FILM 47K5 +/- 1% 250mW 200V 50 ppm/DEG.C, SURFACE MOUNTED, SIZE MINI-MELF,	VISHAY COMPONENTS	SMM0204-47K5-1%50ppm
R10	24811/181	RESISTOR-FIXED METAL-FILM 2K21 +/- 1% 250mW 200V 50 ppm/DEG.C, SURFACE MOUNTED, SIZE MINI-MELF,	VISHAY COMPONENTS	SMM0204-2K21-1%50ppm
R11	24811/167	RESISTOR-FIXED METAL-FILM 562R +/- 1% 250mW 200V 50 ppm/DEG.C, SURFACE MOUNTED, SIZE MINI-MELF,	VISHAY COMPONENTS	SMM0204-562R-1%50ppm
R12	24811/137	RESISTOR-FIXED METAL-FILM 33R2 +/- 1% 250mW 200V 50 ppm/DEG.C, SURFACE MOUNTED, SIZE MINI-MELF,	VISHAY COMPONENTS	SMM0204-33R2-1%50ppm
R13	24811/197	RESISTOR-FIXED METAL-FILM 10K +/- 1% 250mW 200V 50 ppm/DEG.C, SURFACE MOUNTED, SIZE MINI-MELF, (8mm	VISHAY COMPONENTS	SMM0204-10K-1%50ppm
R14	24811/181	RESISTOR-FIXED METAL-FILM 2K21 +/- 1% 250mW 200V 50 ppm/DEG.C, SURFACE MOUNTED, SIZE MINI-MELF,	VISHAY COMPONENTS	SMM0204-2K21-1%50ppm
R15	24811/213	RESISTOR-FIXED METAL-FILM 47K5 +/- 1% 250mW 200V 50 ppm/DEG.C, SURFACE MOUNTED, SIZE MINI-MELF,	VISHAY COMPONENTS	SMM0204-47K5-1%50ppm
R16	24811/161	RESISTOR-FIXED METAL-FILM 332R +/- 1% 250mW 200V 50 ppm/DEG.C, SURFACE MOUNTED, SIZE MINI-MELF,	VISHAY COMPONENTS	SMM0204-332R-1%50ppm
R17	24811/197	RESISTOR-FIXED METAL-FILM 10K +/- 1% 250mW 200V 50 ppm/DEG.C, SURFACE MOUNTED, SIZE MINI-MELF, (8mm	VISHAY COMPONENTS	SMM0204-10K-1%50ppm
R18	24811/225	RESISTOR-FIXED METAL-FILM 150K +/- 1% 250mW 200V 50 ppm/DEG.C, SURFACE MOUNTED, SIZE MINI-MELF,	VISHAY COMPONENTS	SMM0204-150K-1%50ppm
R19	24811/195	RESISTOR-FIXED METAL-FILM 8K25 +/- 1% 250mW 200V 50 ppm/DEG.C, SURFACE MOUNTED, SIZE MINI-MELF,	VISHAY COMPONENTS	SMM0204-8K25-1%50ppm
R20	24811/221	RESISTOR-FIXED METAL-FILM 100K +/- 1% 250mW 200V 50 ppm/DEG.C, SURFACE MOUNTED, SIZE MINI-MELF,	VISHAY COMPONENTS	SMM0204-100K-1%50ppm
R21	24811/157	RESISTOR-FIXED METAL-FILM 221R +/- 1% 250mW 200V 50 ppm/DEG.C, SURFACE MOUNTED, SIZE MINI-MELF,	VISHAY COMPONENTS	SMM0204-221R-1%50ppm
R22	24811/169	RESISTOR-FIXED METAL-FILM 681R +/- 1% 250mW 200V 50 ppm/DEG.C, SURFACE MOUNTED, SIZE MINI-MELF,	VISHAY COMPONENTS	SMM0204-681R-1%50ppm
R23	24811/173	RESISTOR-FIXED METAL-FILM 1K +/- 1% 250mW 200V 50 ppm/DEG.C, SURFACE MOUNTED, SIZE MINI-MELF, (8mm	VISHAY COMPONENTS	SMM0204-1K0-1%-50ppm
R24	25711/640	RESISTOR-VARIABLE CERMET LINEAR, 5K 10% 500mW 200V 150 ppm/DEG.C, SINGLE-TURN, HORIZONTAL-PCB,	VISHAY COMPONENTS	TYA-5K-10%
R25	24811/167	RESISTOR-FIXED METAL-FILM 562R +/- 1% 250mW 200V 50 ppm/DEG.C, SURFACE MOUNTED, SIZE MINI-MELF,	VISHAY COMPONENTS	SMM0204-562R-1%50ppm
R26	24811/167	RESISTOR-FIXED METAL-FILM 562R +/- 1% 250mW 200V 50 ppm/DEG.C, SURFACE MOUNTED, SIZE MINI-MELF,	VISHAY COMPONENTS	SMM0204-562R-1%50ppm
R27	24811/197	RESISTOR-FIXED METAL-FILM 10K +/- 1% 250mW 200V 50 ppm/DEG.C, SURFACE MOUNTED, SIZE MINI-MELF, (8mm	VISHAY COMPONENTS	SMM0204-10K-1%50ppm
TR1	28459/077	TRANSISTOR N-CHANNEL-DEPLETION MOSFET BF996S... 20V 300mW 20mA DUAL-GATE, MARKING CODE MH, SURFACE	PHILIPS	BF996S
TR2	28457/850	TRANSISTOR NPN BIPOLAR FMMT2369... 40V 600MHz 300mW 500mA 40hFE MIN @ 10mA, MARKING CODE *1J,	PHILIPS	PMBT2369
TR3	28453/829	TRANSISTOR NPN BIPOLAR BC848B... 30V 200MHz 200mW 100mA 290hFE @ 2mA, NOISE 2dB @ 1KHz, MARKING CODE	PHILIPS	BC848B
TR4	28453/829	TRANSISTOR NPN BIPOLAR BC848B... 30V 200MHz 200mW 100mA 290hFE @ 2mA, NOISE 2dB @ 1KHz, MARKING CODE	PHILIPS	BC848B

Cir. Ref.	MI part number	Description	Manufacturer	Manufacturer's part number
3 stage attenuator A20				
		When ordering, prefix circuit reference with A2.		
	44829-891	Complete unit	Issue 5	
C1 to C4	26386/887	CAPACITOR-FIXED CERAMIC 100nF +/-10% 50V X7R/2C1, MULTILAYER, SURFACE-MOUNTED, SIZE 1210, NICKEL	ROHM ELECTRONICS LTD	MCH32-5C-104-KP
C5	26386/830	CAPACITOR-FIXED CERAMIC 330pF +/-5% 50V NP0 MULTILAYER, SURFACE-MOUNTED, SIZE 0805, NICKEL	ROHM ELECTRONICS LTD	MCH21-5A-331-JP
C6	26386/830	CAPACITOR-FIXED CERAMIC 330pF +/-5% 50V NP0 MULTILAYER, SURFACE-MOUNTED, SIZE 0805, NICKEL	ROHM ELECTRONICS LTD	MCH21-5A-331-JP
C7	26386/887	CAPACITOR-FIXED CERAMIC 100nF +/-10% 50V X7R/2C1, MULTILAYER, SURFACE-MOUNTED, SIZE 1210, NICKEL	ROHM ELECTRONICS LTD	MCH32-5C-104-KP
C8 to C11	26386/830	CAPACITOR-FIXED CERAMIC 330pF +/-5% 50V NP0 MULTILAYER, SURFACE-MOUNTED, SIZE 0805, NICKEL	ROHM ELECTRONICS LTD	MCH21-5A-331-JP
C12 to C16	26386/887	CAPACITOR-FIXED CERAMIC 100nF +/-10% 50V X7R/2C1, MULTILAYER, SURFACE-MOUNTED, SIZE 1210, NICKEL	ROHM ELECTRONICS LTD	MCH32-5C-104-KP
C17	26386/830	CAPACITOR-FIXED CERAMIC 330pF +/-5% 50V NP0 MULTILAYER, SURFACE-MOUNTED, SIZE 0805, NICKEL	ROHM ELECTRONICS LTD	MCH21-5A-331-JP
C18	26386/830	CAPACITOR-FIXED CERAMIC 330pF +/-5% 50V NP0 MULTILAYER, SURFACE-MOUNTED, SIZE 0805, NICKEL	ROHM ELECTRONICS LTD	MCH21-5A-331-JP
C19	26386/887	CAPACITOR-FIXED CERAMIC 100nF +/-10% 50V X7R/2C1, MULTILAYER, SURFACE-MOUNTED, SIZE 1210, NICKEL	ROHM ELECTRONICS LTD	MCH32-5C-104-KP
C20	26386/830	CAPACITOR-FIXED CERAMIC 330pF +/-5% 50V NP0 MULTILAYER, SURFACE-MOUNTED, SIZE 0805, NICKEL	ROHM ELECTRONICS LTD	MCH21-5A-331-JP
C21	26386/830	CAPACITOR-FIXED CERAMIC 330pF +/-5% 50V NP0 MULTILAYER, SURFACE-MOUNTED, SIZE 0805, NICKEL	ROHM ELECTRONICS LTD	MCH21-5A-331-JP
C22	26386/887	CAPACITOR-FIXED CERAMIC 100nF +/-10% 50V X7R/2C1, MULTILAYER, SURFACE-MOUNTED, SIZE 1210, NICKEL	ROHM ELECTRONICS LTD	MCH32-5C-104-KP
C23	26386/830	CAPACITOR-FIXED CERAMIC 330pF +/-5% 50V NP0 MULTILAYER, SURFACE-MOUNTED, SIZE 0805, NICKEL	ROHM ELECTRONICS LTD	MCH21-5A-331-JP
C24	26386/830	CAPACITOR-FIXED CERAMIC 330pF +/-5% 50V NP0 MULTILAYER, SURFACE-MOUNTED, SIZE 0805, NICKEL	ROHM ELECTRONICS LTD	MCH21-5A-331-JP
C25 to C28	26386/887	CAPACITOR-FIXED CERAMIC 100nF +/-10% 50V X7R/2C1, MULTILAYER, SURFACE-MOUNTED, SIZE 1210, NICKEL	ROHM ELECTRONICS LTD	MCH32-5C-104-KP
C29	26386/830	CAPACITOR-FIXED CERAMIC 330pF +/-5% 50V NP0 MULTILAYER, SURFACE-MOUNTED, SIZE 0805, NICKEL	ROHM ELECTRONICS LTD	MCH21-5A-331-JP
C30	26386/830	CAPACITOR-FIXED CERAMIC 330pF +/-5% 50V NP0 MULTILAYER, SURFACE-MOUNTED, SIZE 0805, NICKEL	ROHM ELECTRONICS LTD	MCH21-5A-331-JP
C31	26386/887	CAPACITOR-FIXED CERAMIC 100nF +/-10% 50V X7R/2C1, MULTILAYER, SURFACE-MOUNTED, SIZE 1210, NICKEL	ROHM ELECTRONICS LTD	MCH32-5C-104-KP
C32	26386/830	CAPACITOR-FIXED CERAMIC 330pF +/-5% 50V NP0 MULTILAYER, SURFACE-MOUNTED, SIZE 0805, NICKEL	ROHM ELECTRONICS LTD	MCH21-5A-331-JP
C33	26386/830	CAPACITOR-FIXED CERAMIC 330pF +/-5% 50V NP0 MULTILAYER, SURFACE-MOUNTED, SIZE 0805, NICKEL	ROHM ELECTRONICS LTD	MCH21-5A-331-JP
C34	26386/887	CAPACITOR-FIXED CERAMIC 100nF +/-10% 50V X7R/2C1, MULTILAYER, SURFACE-MOUNTED, SIZE 1210, NICKEL	ROHM ELECTRONICS LTD	MCH32-5C-104-KP
C35	26386/830	CAPACITOR-FIXED CERAMIC 330pF +/-5% 50V NP0 MULTILAYER, SURFACE-MOUNTED, SIZE 0805, NICKEL	ROHM ELECTRONICS LTD	MCH21-5A-331-JP
C36	26386/830	CAPACITOR-FIXED CERAMIC 330pF +/-5% 50V NP0 MULTILAYER, SURFACE-MOUNTED, SIZE 0805, NICKEL	ROHM ELECTRONICS LTD	MCH21-5A-331-JP
C37	26386/887	CAPACITOR-FIXED CERAMIC 100nF +/-10% 50V X7R/2C1, MULTILAYER, SURFACE-MOUNTED, SIZE 1210, NICKEL	ROHM ELECTRONICS LTD	MCH32-5C-104-KP

Cir. Ref.	MI part number	Description	Manufacturer	Manufacturer's part number
3 stage attenuator A20 (contd.)				
C38	26386/887	CAPACITOR-FIXED CERAMIC 100nF +/-10% 50V X7R/2C1, MULTILAYER, SURFACE-MOUNTED, SIZE 1210, NICKEL	ROHM ELECTRONICS LTD	MCH32-5C-104-KP
C40	26343/754	CAPACITOR-FIXED CERAMIC 1.2pF +/-0.5pF 50V NPO MULTILAYER, SURFACE-MOUNTED, SIZE 0805, NICKEL	ROHM ELECTRONICS LTD	MCH21-5A-1R2-DP
C50	26386/887	CAPACITOR-FIXED CERAMIC 100nF +/-10% 50V X7R/2C1, MULTILAYER, SURFACE-MOUNTED, SIZE 1210, NICKEL	ROHM ELECTRONICS LTD	MCH32-5C-104-KP
L1 to L7	23642/551	INDUCTOR-FIXED 2.2uH +/- 10% COATED-LACQUER, MINIATURE, 470mA 0R9 MAX, 32 Q @ 7.9 MHz, 140 MHz	MEGGITT ELECTRONICS	C10-406/8/27509/014
PLA	23437/042	CONNECTOR MULTIWAY, PCB HEADER, 10 WAY, STRAIGHT, 2-ROW, 2.54mm GRID, TO ACCEPT LATCHING SOCKET,	BERG ELECTRONICS	75869-301
R1	24811/910	RESISTOR-FIXED METAL-FILM 61R9 +/- 1% 250mW 200V 50 ppm/DEG.C, LOW-INDUCTANCE, SURFACE MOUNTED,	VISHAY COMPONENTS	SMM0204-HF-61R9-1%
R2	24811/925	RESISTOR-FIXED METAL-FILM 274R +/- 1% 250mW 200V 50 ppm/DEG.C, LOW-INDUCTANCE, SURFACE MOUNTED,	VISHAY COMPONENTS	SMM0204-HF-274R-1%
R3	24811/906	RESISTOR-FIXED METAL-FILM 36R5 +/- 1% 250mW 200V 50 ppm/DEG.C, LOW-INDUCTANCE, SURFACE MOUNTED,	VISHAY COMPONENTS	SMM0204-HF-36R5-1%
R4	24811/925	RESISTOR-FIXED METAL-FILM 274R +/- 1% 250mW 200V 50 ppm/DEG.C, LOW-INDUCTANCE, SURFACE MOUNTED,	VISHAY COMPONENTS	SMM0204-HF-274R-1%
R5	24811/910	RESISTOR-FIXED METAL-FILM 61R9 +/- 1% 250mW 200V 50 ppm/DEG.C, LOW-INDUCTANCE, SURFACE MOUNTED,	VISHAY COMPONENTS	SMM0204-HF-61R9-1%
R6	24811/912	RESISTOR-FIXED METAL-FILM 100R +/- 1% 250mW 200V 50 ppm/DEG.C, LOW-INDUCTANCE, SURFACE MOUNTED,	VISHAY COMPONENTS	SMM0204-HF-100R-1%
R7	24811/911	RESISTOR-FIXED METAL-FILM 75R +/- 1% 250mW 200V 50 ppm/DEG.C, LOW-INDUCTANCE, SURFACE MOUNTED, SIZE	VISHAY COMPONENTS	SMM0204-HF-75R0-1%
R8	24811/909	RESISTOR-FIXED METAL-FILM 51R1 +/- 1% 250mW 200V 50 ppm/DEG.C, LOW-INDUCTANCE, SURFACE MOUNTED,	VISHAY COMPONENTS	SMM0204-HF-51R1-1%
R9	24811/911	RESISTOR-FIXED METAL-FILM 75R +/- 1% 250mW 200V 50 ppm/DEG.C, LOW-INDUCTANCE, SURFACE MOUNTED, SIZE	VISHAY COMPONENTS	SMM0204-HF-75R0-1%
R10	24811/912	RESISTOR-FIXED METAL-FILM 100R +/- 1% 250mW 200V 50 ppm/DEG.C, LOW-INDUCTANCE, SURFACE MOUNTED,	VISHAY COMPONENTS	SMM0204-HF-100R-1%
R11	24811/910	RESISTOR-FIXED METAL-FILM 61R9 +/- 1% 250mW 200V 50 ppm/DEG.C, LOW-INDUCTANCE, SURFACE MOUNTED,	VISHAY COMPONENTS	SMM0204-HF-61R9-1%
R12	24811/925	RESISTOR-FIXED METAL-FILM 274R +/- 1% 250mW 200V 50 ppm/DEG.C, LOW-INDUCTANCE, SURFACE MOUNTED,	VISHAY COMPONENTS	SMM0204-HF-274R-1%
R13	24811/906	RESISTOR-FIXED METAL-FILM 36R5 +/- 1% 250mW 200V 50 ppm/DEG.C, LOW-INDUCTANCE, SURFACE MOUNTED,	VISHAY COMPONENTS	SMM0204-HF-36R5-1%
R14	24811/925	RESISTOR-FIXED METAL-FILM 274R +/- 1% 250mW 200V 50 ppm/DEG.C, LOW-INDUCTANCE, SURFACE MOUNTED,	VISHAY COMPONENTS	SMM0204-HF-274R-1%
R15	24811/910	RESISTOR-FIXED METAL-FILM 61R9 +/- 1% 250mW 200V 50 ppm/DEG.C, LOW-INDUCTANCE, SURFACE MOUNTED,	VISHAY COMPONENTS	SMM0204-HF-61R9-1%
RLD to RLF	23486/181	RELAY MAGNETIC, SINGLE-POLE CHANGEOVER, POLARISED DUAL 5V COIL, 62R - LATCHING, ISOL 60dB @ 1.8GHz,	MATSUSHITA CONTROLS	RK1-L2-5V-H23

Cir. Ref.	Mi part number	Description	Manufacturer	Manufacturer's part number

2 stage attenuator A21

When ordering, prefix circuit reference with A21.

	44829-892	Complete unit	Issue 6	
C1 to C4	26386/887	CAPACITOR-FIXED CERAMIC 100nF +/-10% 50V X7R/2C1, MULTILAYER, SURFACE-MOUNTED, SIZE 1210, NICKEL	ROHM ELECTRONICS LTD	MCH32-5C-104-KP
C5	26386/830	CAPACITOR-FIXED CERAMIC 330pF +/-5% 50V NP0 MULTILAYER, SURFACE-MOUNTED, SIZE 0805, NICKEL	ROHM ELECTRONICS LTD	MCH21-5A-331-JP
C6	26386/830	CAPACITOR-FIXED CERAMIC 330pF +/-5% 50V NP0 MULTILAYER, SURFACE-MOUNTED, SIZE 0805, NICKEL	ROHM ELECTRONICS LTD	MCH21-5A-331-JP
C7	26386/887	CAPACITOR-FIXED CERAMIC 100nF +/-10% 50V X7R/2C1, MULTILAYER, SURFACE-MOUNTED, SIZE 1210, NICKEL	ROHM ELECTRONICS LTD	MCH32-5C-104-KP
C8 to C11	26386/830	CAPACITOR-FIXED CERAMIC 330pF +/-5% 50V NP0 MULTILAYER, SURFACE-MOUNTED, SIZE 0805, NICKEL	ROHM ELECTRONICS LTD	MCH21-5A-331-JP
C12 to C16	26386/887	CAPACITOR-FIXED CERAMIC 100nF +/-10% 50V X7R/2C1, MULTILAYER, SURFACE-MOUNTED, SIZE 1210, NICKEL	ROHM ELECTRONICS LTD	MCH32-5C-104-KP
C17	26386/830	CAPACITOR-FIXED CERAMIC 330pF +/-5% 50V NP0 MULTILAYER, SURFACE-MOUNTED, SIZE 0805, NICKEL	ROHM ELECTRONICS LTD	MCH21-5A-331-JP
C18	26386/830	CAPACITOR-FIXED CERAMIC 330pF +/-5% 50V NP0 MULTILAYER, SURFACE-MOUNTED, SIZE 0805, NICKEL	ROHM ELECTRONICS LTD	MCH21-5A-331-JP
C19	26386/887	CAPACITOR-FIXED CERAMIC 100nF +/-10% 50V X7R/2C1, MULTILAYER, SURFACE-MOUNTED, SIZE 1210, NICKEL	ROHM ELECTRONICS LTD	MCH32-5C-104-KP
C20	26386/830	CAPACITOR-FIXED CERAMIC 330pF +/-5% 50V NP0 MULTILAYER, SURFACE-MOUNTED, SIZE 0805, NICKEL	ROHM ELECTRONICS LTD	MCH21-5A-331-JP
C21	26386/830	CAPACITOR-FIXED CERAMIC 330pF +/-5% 50V NP0 MULTILAYER, SURFACE-MOUNTED, SIZE 0805, NICKEL	ROHM ELECTRONICS LTD	MCH21-5A-331-JP
C22	26386/887	CAPACITOR-FIXED CERAMIC 100nF +/-10% 50V X7R/2C1, MULTILAYER, SURFACE-MOUNTED, SIZE 1210, NICKEL	ROHM ELECTRONICS LTD	MCH32-5C-104-KP
C23	26386/830	CAPACITOR-FIXED CERAMIC 330pF +/-5% 50V NP0 MULTILAYER, SURFACE-MOUNTED, SIZE 0805, NICKEL	ROHM ELECTRONICS LTD	MCH21-5A-331-JP
C24	26386/830	CAPACITOR-FIXED CERAMIC 330pF +/-5% 50V NP0 MULTILAYER, SURFACE-MOUNTED, SIZE 0805, NICKEL	ROHM ELECTRONICS LTD	MCH21-5A-331-JP
C37	26386/887	CAPACITOR-FIXED CERAMIC 100nF +/-10% 50V X7R/2C1, MULTILAYER, SURFACE-MOUNTED, SIZE 1210, NICKEL	ROHM ELECTRONICS LTD	MCH32-5C-104-KP
C38	26386/887	CAPACITOR-FIXED CERAMIC 100nF +/-10% 50V X7R/2C1, MULTILAYER, SURFACE-MOUNTED, SIZE 1210, NICKEL	ROHM ELECTRONICS LTD	MCH32-5C-104-KP
C50	26386/830	CAPACITOR-FIXED CERAMIC 330pF +/-5% 50V NP0 MULTILAYER, SURFACE-MOUNTED, SIZE 0805, NICKEL	ROHM ELECTRONICS LTD	MCH21-5A-331-JP
L1 to L5	23642/551	INDUCTOR-FIXED 2.2uH +/- 10% COATED-LACQUER, MINIATURE, 470mA 0R9 MAX, 32 Q @ 7.9 MHz, 140 MHz	MEGGITT ELECTRONICS	C10-406/8/27509/014
PLA	23437/042	CONNECTOR MULTIWAY, PCB HEADER, 10 WAY, STRAIGHT, 2-ROW, 2.54mm GRID, TO ACCEPT LATCHING SOCKET,	BERG ELECTRONICS	75869-301
R1	24811/910	RESISTOR-FIXED METAL-FILM 61R9 +/- 1% 250mW 200V 50 ppm/DEG.C, LOW-INDUCTANCE, SURFACE MOUNTED,	VISHAY COMPONENTS	SMM0204-HF-61R9-1%

Cir. Ref.	MI part number	Description	Manufacturer	Manufacturer's part number
2 stage attenuator A21 (contd.)				
R2	24811/925	RESISTOR-FIXED METAL-FILM 274R +/- 1% 250mW 200V 50 ppm/DEG.C, LOW-INDUCTANCE, SURFACE MOUNTED,	VISHAY COMPONENTS	SMM0204-HF-274R-1%
R3	24811/906	RESISTOR-FIXED METAL-FILM 36R5 +/- 1% 250mW 200V 50 ppm/DEG.C, LOW-INDUCTANCE, SURFACE MOUNTED,	VISHAY COMPONENTS	SMM0204-HF-36R5-1%
R4	24811/925	RESISTOR-FIXED METAL-FILM 274R +/- 1% 250mW 200V 50 ppm/DEG.C, LOW-INDUCTANCE, SURFACE MOUNTED,	VISHAY COMPONENTS	SMM0204-HF-274R-1%
R5	24811/910	RESISTOR-FIXED METAL-FILM 61R9 +/- 1% 250mW 200V 50 ppm/DEG.C, LOW-INDUCTANCE, SURFACE MOUNTED,	VISHAY COMPONENTS	SMM0204-HF-61R9-1%
R6	24811/912	RESISTOR-FIXED METAL-FILM 100R +/- 1% 250mW 200V 50 ppm/DEG.C, LOW-INDUCTANCE, SURFACE MOUNTED,	VISHAY COMPONENTS	SMM0204-HF-100R-1%
R7	24811/911	RESISTOR-FIXED METAL-FILM 75R +/- 1% 250mW 200V 50 ppm/DEG.C, LOW-INDUCTANCE, SURFACE MOUNTED, SIZE	VISHAY COMPONENTS	SMM0204-HF-75R0-1%
R8	24811/909	RESISTOR-FIXED METAL-FILM 51R1 +/- 1% 250mW 200V 50 ppm/DEG.C, LOW-INDUCTANCE, SURFACE MOUNTED,	VISHAY COMPONENTS	SMM0204-HF-51R1-1%
R9	24811/911	RESISTOR-FIXED METAL-FILM 75R +/- 1% 250mW 200V 50 ppm/DEG.C, LOW-INDUCTANCE, SURFACE MOUNTED, SIZE	VISHAY COMPONENTS	SMM0204-HF-75R0-1%
R10	24811/912	RESISTOR-FIXED METAL-FILM 100R +/- 1% 250mW 200V 50 ppm/DEG.C, LOW-INDUCTANCE, SURFACE MOUNTED,	VISHAY COMPONENTS	SMM0204-HF-100R-1%
RLB to RLD	23486/181	RELAY MAGNETIC, SINGLE-POLE CHANGEOVER, POLARISED DUAL 5V COIL, 62R - LATCHING, ISOL 60dB @ 1.8GHz,	MATSUSHITA CONTROLS	RK1-L2-5V-H23

Cir. Ref.	MI part number	Description	Manufacturer	Manufacturer's part number

Audio processor board B1/2

When ordering, prefix circuit reference with B1/2.

	44830-180	Complete unit	Issue 1	
C1	26386/602	CAPACITOR-FIXED CERAMIC 1uF +/-10% 25V X7R, MULTILAYER, SURFACE-MOUNTED, SIZE 1210, NICKEL	PHILIPS	1210-2R-105-K8-BBC
C2	26386/602	CAPACITOR-FIXED CERAMIC 1uF +/-10% 25V X7R, MULTILAYER, SURFACE-MOUNTED, SIZE 1210, NICKEL	PHILIPS	1210-2R-105-K8-BBC
C3 to C21	26386/875	CAPACITOR-FIXED CERAMIC 10nF +/-10% 50V X7R/2C1, MULTILAYER, SURFACE-MOUNTED, SIZE 0805, NICKEL	ROHM ELECTRONICS LTD	MCH21-5C-103-KP
C28 to C36	26386/899	CAPACITOR-FIXED CERAMIC 100nF +/-10% 50V X7R/2C1, MULTILAYER, SURFACE-MOUNTED, SIZE 1206, NICKEL	ROHM ELECTRONICS LTD	MCH31-5C-104-KP
C37	26386/820	CAPACITOR-FIXED CERAMIC 47pF +/-5% 50V NP0 MULTILAYER, SURFACE-MOUNTED, SIZE 0805, NICKEL	ROHM ELECTRONICS LTD	MCH21-5A-470-JP
C38 to C41	26386/899	CAPACITOR-FIXED CERAMIC 100nF +/-10% 50V X7R/2C1, MULTILAYER, SURFACE-MOUNTED, SIZE 1206, NICKEL	ROHM ELECTRONICS LTD	MCH31-5C-104-KP
C50	26421/152	CAPACITOR-FIXED ALUMINIUM 220uF +/-20% 16V ELECTROLYTIC, RADIAL, 5mm PWP, 9mm MAX BODY DIA,	VISHAY COMPONENTS	EKS-00-CC-322-D-C0
C51	26421/152	CAPACITOR-FIXED ALUMINIUM 220uF +/-20% 16V ELECTROLYTIC, RADIAL, 5mm PWP, 9mm MAX BODY DIA,	VISHAY COMPONENTS	EKS-00-CC-322-D-C0
C52	26451/010	CAPACITOR-FIXED ALUMINIUM 100uF +/-20% 6.3V ELECTROLYTIC, SURFACE-MOUNTED, SIZE 6.6 x 6.6mm,	PANASONIC INDUSTRIAL	ECE-V-0JA-101P
C53	26421/152	CAPACITOR-FIXED ALUMINIUM 220uF +/-20% 16V ELECTROLYTIC, RADIAL, 5mm PWP, 9mm MAX BODY DIA,	VISHAY COMPONENTS	EKS-00-CC-322-D-C0
C54	26421/152	CAPACITOR-FIXED ALUMINIUM 220uF +/-20% 16V ELECTROLYTIC, RADIAL, 5mm PWP, 9mm MAX BODY DIA,	VISHAY COMPONENTS	EKS-00-CC-322-D-C0
C55	26451/005	CAPACITOR-FIXED ALUMINIUM 22uF +/-20% 6.3V ELECTROLYTIC, SURFACE-MOUNTED, SIZE 4.3 x 4.3mm,	PANASONIC INDUSTRIAL	ECE-V-0JA-220R
C56	26451/001	CAPACITOR-FIXED ALUMINIUM 1uF +/-20% 50V ELECTROLYTIC, SURFACE-MOUNTED, SIZE 4.3 x 4.3mm,	PANASONIC INDUSTRIAL	ECE-V-1HA-010R
C57	26386/899	CAPACITOR-FIXED CERAMIC 100nF +/-10% 50V X7R/2C1, MULTILAYER, SURFACE-MOUNTED, SIZE 1206, NICKEL	ROHM ELECTRONICS LTD	MCH31-5C-104-KP
C58	26386/875	CAPACITOR-FIXED CERAMIC 10nF +/-10% 50V X7R/2C1, MULTILAYER, SURFACE-MOUNTED, SIZE 0805, NICKEL	ROHM ELECTRONICS LTD	MCH21-5C-103-KP
C60	26451/006	CAPACITOR-FIXED ALUMINIUM 22uF +/-20% 16V ELECTROLYTIC, SURFACE-MOUNTED, SIZE 5.3 x 5.3mm,	RUBYCON CAPACITORS	16-REV-22
C61	26386/814	CAPACITOR-FIXED CERAMIC 15pF +/-5% 50V NP0 MULTILAYER, SURFACE-MOUNTED, SIZE 0805, NICKEL	ROHM ELECTRONICS LTD	MCH21-5A-150-JP
C62	26386/814	CAPACITOR-FIXED CERAMIC 15pF +/-5% 50V NP0 MULTILAYER, SURFACE-MOUNTED, SIZE 0805, NICKEL	ROHM ELECTRONICS LTD	MCH21-5A-150-JP
C63	26343/447	CAPACITOR-FIXED CERAMIC 330pF +/-2% 63V N750 SINGLELAYER, RADIAL, 2.5mm PWP, (TAPED).	VISHAY COMPONENTS	ROU-331-GAK-ACR-J
C64	26343/432	CAPACITOR-FIXED CERAMIC 150pF +/-2% 63V N150 SINGLELAYER, RADIAL, 2.5mm PWP, (TAPED).	VISHAY COMPONENTS	RPO-151-GAK-ACR-J
C65	26343/921	CAPACITOR-FIXED CERAMIC 1.2nF +/-1% 63V NP0 MULTILAYER, RADIAL, 5.08mm PWP, (LOOSE OR TAPED).	AVX LTD	SR21-5A-122-FAA
C66	26343/434	CAPACITOR-FIXED CERAMIC 68pF +/-2% 63V N150 SINGLELAYER, RADIAL, 2.5mm PWP, (TAPED).	VISHAY COMPONENTS	ROP-680-GAK-ACR-J

Audio processor board B1/2 (contd.)

Cir. Ref.	MI part number	Description	Manufacturer	Manufacturer's part number
C70	26343/943	CAPACITOR-FIXED CERAMIC 10nF +/-1% 50V NP0 MULTILAYER, RADIAL, 5.08mm PWP, (LOOSE OR TAPED).	AVX LTD	SR30-5A-103-FAT
C71	26343/935	CAPACITOR-FIXED CERAMIC 4.7nF +/-1% 63V NP0 MULTILAYER, RADIAL, 5.08mm PWP, (LOOSE OR TAPED).	AVX LTD	SR21-5A-472-FAA
C72	26451/003	CAPACITOR-FIXED ALUMINIUM 10uF +/-20% 16V ELECTROLYTIC, SURFACE-MOUNTED, SIZE 4.3 x 4.3mm,	PANASONIC INDUSTRIAL	ECE-V-1CA-100R
C73	26343/447	CAPACITOR-FIXED CERAMIC 330pF +/-2% 63V N750 SINGLELAYER, RADIAL, 2.5mm PWP, (TAPED).	VISHAY COMPONENTS	ROU-331-GAK-ACR-J
C74	26343/432	CAPACITOR-FIXED CERAMIC 150pF +/-2% 63V N150 SINGLELAYER, RADIAL, 2.5mm PWP, (TAPED).	VISHAY COMPONENTS	RPO-151-GAK-ACR-J
C75	26343/921	CAPACITOR-FIXED CERAMIC 1.2nF +/-1% 63V NP0 MULTILAYER, RADIAL, 5.08mm PWP, (LOOSE OR TAPED).	AVX LTD	SR21-5A-122-FAA
C76	26343/434	CAPACITOR-FIXED CERAMIC 68pF +/-2% 63V N150 SINGLELAYER, RADIAL, 2.5mm PWP, (TAPED).	VISHAY COMPONENTS	ROP-680-GAK-ACR-J
C77	26451/001	CAPACITOR-FIXED ALUMINIUM 1uF +/-20% 50V ELECTROLYTIC, SURFACE-MOUNTED, SIZE 4.3 x 4.3mm,	PANASONIC INDUSTRIAL	ECE-V-1HA-010R
C78	26386/899	CAPACITOR-FIXED CERAMIC 100nF +/-10% 50V X7R/2C1, MULTILAYER, SURFACE-MOUNTED, SIZE 1206, NICKEL	ROHM ELECTRONICS LTD	MCH31-5C-104-KP
C79	26451/003	CAPACITOR-FIXED ALUMINIUM 10uF +/-20% 16V ELECTROLYTIC, SURFACE-MOUNTED, SIZE 4.3 x 4.3mm,	PANASONIC INDUSTRIAL	ECE-V-1CA-100R
C80	26386/818	CAPACITOR-FIXED CERAMIC 33pF +/-5% 50V NP0 MULTILAYER, SURFACE-MOUNTED, SIZE 0805, NICKEL	ROHM ELECTRONICS LTD	MCH21-5A-330-JP
C81	26386/818	CAPACITOR-FIXED CERAMIC 33pF +/-5% 50V NP0 MULTILAYER, SURFACE-MOUNTED, SIZE 0805, NICKEL	ROHM ELECTRONICS LTD	MCH21-5A-330-JP
C82	26386/832	CAPACITOR-FIXED CERAMIC 470pF +/-5% 50V NP0 MULTILAYER, SURFACE-MOUNTED, SIZE 0805, NICKEL	ROHM ELECTRONICS LTD	MCH21-5A-471-JP
C83	26451/001	CAPACITOR-FIXED ALUMINIUM 1uF +/-20% 50V ELECTROLYTIC, SURFACE-MOUNTED, SIZE 4.3 x 4.3mm,	PANASONIC INDUSTRIAL	ECE-V-1HA-010R
C84	26386/871	CAPACITOR-FIXED CERAMIC 4.7nF +/-10% 50V X7R/2C1, MULTILAYER, SURFACE-MOUNTED, SIZE 0805, NICKEL	ROHM ELECTRONICS LTD	MCH21-5C-472-KP
C85	26386/863	CAPACITOR-FIXED CERAMIC 1nF +/-10% 50V X7R/2C1, MULTILAYER, SURFACE-MOUNTED, SIZE 0805, NICKEL	ROHM ELECTRONICS LTD	MCH21-5C-102-KP
C86	26386/818	CAPACITOR-FIXED CERAMIC 33pF +/-5% 50V NP0 MULTILAYER, SURFACE-MOUNTED, SIZE 0805, NICKEL	ROHM ELECTRONICS LTD	MCH21-5A-330-JP
C87	26386/814	CAPACITOR-FIXED CERAMIC 15pF +/-5% 50V NP0 MULTILAYER, SURFACE-MOUNTED, SIZE 0805, NICKEL	ROHM ELECTRONICS LTD	MCH21-5A-150-JP
C88	26343/943	CAPACITOR-FIXED CERAMIC 10nF +/-1% 50V NP0 MULTILAYER, RADIAL, 5.08mm PWP, (LOOSE OR TAPED).	AVX LTD	SR30-5A-103-FAT
C89	26386/875	CAPACITOR-FIXED CERAMIC 10nF +/-10% 50V X7R/2C1, MULTILAYER, SURFACE-MOUNTED, SIZE 0805, NICKEL	ROHM ELECTRONICS LTD	MCH21-5C-103-KP
C90	26386/818	CAPACITOR-FIXED CERAMIC 33pF +/-5% 50V NP0 MULTILAYER, SURFACE-MOUNTED, SIZE 0805, NICKEL	ROHM ELECTRONICS LTD	MCH21-5A-330-JP
C91	26451/006	CAPACITOR-FIXED ALUMINIUM 22uF +/-20% 16V ELECTROLYTIC, SURFACE-MOUNTED, SIZE 5.3 x 5.3mm,	RUBYCON CAPACITORS	16-REV-22
C92	26386/875	CAPACITOR-FIXED CERAMIC 10nF +/-10% 50V X7R/2C1, MULTILAYER, SURFACE-MOUNTED, SIZE 0805, NICKEL	ROHM ELECTRONICS LTD	MCH21-5C-103-KP
C93	26386/875	CAPACITOR-FIXED CERAMIC 10nF +/-10% 50V X7R/2C1, MULTILAYER, SURFACE-MOUNTED, SIZE 0805, NICKEL	ROHM ELECTRONICS LTD	MCH21-5C-103-KP
C94	26386/867	CAPACITOR-FIXED CERAMIC 2.2nF +/-10% 50V X7R/2C1, MULTILAYER, SURFACE-MOUNTED, SIZE 0805, NICKEL	ROHM ELECTRONICS LTD	MCH21-5C-222-KP
C95	26386/818	CAPACITOR-FIXED CERAMIC 33pF +/-5% 50V NP0 MULTILAYER, SURFACE-MOUNTED, SIZE 0805, NICKEL	ROHM ELECTRONICS LTD	MCH21-5A-330-JP

Audio processor board B1/2 (contd.)

Cir. Ref.	MI part number	Description	Manufacturer	Manufacturer's part number
C96	26451/009	CAPACITOR-FIXED ALUMINIUM 47uF +/-20% 16V ELECTROLYTIC, SURFACE-MOUNTED, SIZE 6.6 x 6.6mm,	PANASONIC INDUSTRIAL	ECE-V-1CA-470P
C97	26343/788	CAPACITOR-FIXED CERAMIC 680pF +/-5% 50V NPO MULTILAYER, SURFACE-MOUNTED, SIZE 0805, NICKEL	ROHM ELECTRONICS LTD	MCH21-5A-681-JP
C98	26451/006	CAPACITOR-FIXED ALUMINIUM 22uF +/-20% 16V ELECTROLYTIC, SURFACE-MOUNTED, SIZE 5.3 x 5.3mm,	RUBYCON CAPACITORS	16-REV-22
C99	26451/006	CAPACITOR-FIXED ALUMINIUM 22uF +/-20% 16V ELECTROLYTIC, SURFACE-MOUNTED, SIZE 5.3 x 5.3mm,	RUBYCON CAPACITORS	16-REV-22
C100	26451/001	CAPACITOR-FIXED ALUMINIUM 1uF +/-20% 50V ELECTROLYTIC, SURFACE-MOUNTED, SIZE 4.3 x 4.3mm,	PANASONIC INDUSTRIAL	ECE-V-1HA-010R
C101	26386/777	CAPACITOR-FIXED CERAMIC 47nF +/-20% 63V X7R/2C1, MULTILAYER, SURFACE-MOUNTED, SIZE 1206, NICKEL	PHILIPS	1206-2R-473-K9-BBC
C102	26451/001	CAPACITOR-FIXED ALUMINIUM 1uF +/-20% 50V ELECTROLYTIC, SURFACE-MOUNTED, SIZE 4.3 x 4.3mm,	PANASONIC INDUSTRIAL	ECE-V-1HA-010R
C103	26386/777	CAPACITOR-FIXED CERAMIC 47nF +/-20% 63V X7R/2C1, MULTILAYER, SURFACE-MOUNTED, SIZE 1206, NICKEL	PHILIPS	1206-2R-473-K9-BBC
C104	26386/863	CAPACITOR-FIXED CERAMIC 1nF +/-10% 50V X7R/2C1, MULTILAYER, SURFACE-MOUNTED, SIZE 0805, NICKEL	ROHM ELECTRONICS LTD	MCH21-5C-102-KP
C105	26386/777	CAPACITOR-FIXED CERAMIC 47nF +/-20% 63V X7R/2C1, MULTILAYER, SURFACE-MOUNTED, SIZE 1206, NICKEL	PHILIPS	1206-2R-473-K9-BBC
C106	26386/863	CAPACITOR-FIXED CERAMIC 1nF +/-10% 50V X7R/2C1, MULTILAYER, SURFACE-MOUNTED, SIZE 0805, NICKEL	ROHM ELECTRONICS LTD	MCH21-5C-102-KP
C107	26386/777	CAPACITOR-FIXED CERAMIC 47nF +/-20% 63V X7R/2C1, MULTILAYER, SURFACE-MOUNTED, SIZE 1206, NICKEL	PHILIPS	1206-2R-473-K9-BBC
C108	26386/863	CAPACITOR-FIXED CERAMIC 1nF +/-10% 50V X7R/2C1, MULTILAYER, SURFACE-MOUNTED, SIZE 0805, NICKEL	ROHM ELECTRONICS LTD	MCH21-5C-102-KP
C109	26386/777	CAPACITOR-FIXED CERAMIC 47nF +/-20% 63V X7R/2C1, MULTILAYER, SURFACE-MOUNTED, SIZE 1206, NICKEL	PHILIPS	1206-2R-473-K9-BBC
C110	26386/863	CAPACITOR-FIXED CERAMIC 1nF +/-10% 50V X7R/2C1, MULTILAYER, SURFACE-MOUNTED, SIZE 0805, NICKEL	ROHM ELECTRONICS LTD	MCH21-5C-102-KP
C111	26386/863	CAPACITOR-FIXED CERAMIC 1nF +/-10% 50V X7R/2C1, MULTILAYER, SURFACE-MOUNTED, SIZE 0805, NICKEL	ROHM ELECTRONICS LTD	MCH21-5C-102-KP
C112	26386/777	CAPACITOR-FIXED CERAMIC 47nF +/-20% 63V X7R/2C1, MULTILAYER, SURFACE-MOUNTED, SIZE 1206, NICKEL	PHILIPS	1206-2R-473-K9-BBC
C113	26386/863	CAPACITOR-FIXED CERAMIC 1nF +/-10% 50V X7R/2C1, MULTILAYER, SURFACE-MOUNTED, SIZE 0805, NICKEL	ROHM ELECTRONICS LTD	MCH21-5C-102-KP
C114	26386/777	CAPACITOR-FIXED CERAMIC 47nF +/-20% 63V X7R/2C1, MULTILAYER, SURFACE-MOUNTED, SIZE 1206, NICKEL	PHILIPS	1206-2R-473-K9-BBC
C115	26386/777	CAPACITOR-FIXED CERAMIC 47nF +/-20% 63V X7R/2C1, MULTILAYER, SURFACE-MOUNTED, SIZE 1206, NICKEL	PHILIPS	1206-2R-473-K9-BBC
C120	26386/863	CAPACITOR-FIXED CERAMIC 1nF +/-10% 50V X7R/2C1, MULTILAYER, SURFACE-MOUNTED, SIZE 0805, NICKEL	ROHM ELECTRONICS LTD	MCH21-5C-102-KP
C121	26386/777	CAPACITOR-FIXED CERAMIC 47nF +/-20% 63V X7R/2C1, MULTILAYER, SURFACE-MOUNTED, SIZE 1206, NICKEL	PHILIPS	1206-2R-473-K9-BBC
C122	26386/777	CAPACITOR-FIXED CERAMIC 47nF +/-20% 63V X7R/2C1, MULTILAYER, SURFACE-MOUNTED, SIZE 1206, NICKEL	PHILIPS	1206-2R-473-K9-BBC
C123	26386/863	CAPACITOR-FIXED CERAMIC 1nF +/-10% 50V X7R/2C1, MULTILAYER, SURFACE-MOUNTED, SIZE 0805, NICKEL	ROHM ELECTRONICS LTD	MCH21-5C-102-KP
C126	26386/777	CAPACITOR-FIXED CERAMIC 47nF +/-20% 63V X7R/2C1, MULTILAYER, SURFACE-MOUNTED, SIZE 1206, NICKEL	PHILIPS	1206-2R-473-K9-BBC
C127	26386/824	CAPACITOR-FIXED CERAMIC 100pF +/-5% 50V NP0 MULTILAYER, SURFACE-MOUNTED, SIZE 0805, NICKEL	ROHM ELECTRONICS LTD	MCH21-5A-101-JP

Audio processor board B1/2 (contd.)

Cir. Ref.	MI part number	Description	Manufacturer	Manufacturer's part number
C128	26386/824	CAPACITOR-FIXED CERAMIC 100pF +/-5% 50V NP0 MULTILAYER, SURFACE-MOUNTED, SIZE 0805, NICKEL	ROHM ELECTRONICS LTD	MCH21-5A-101-JP
C129	26386/808	CAPACITOR-FIXED CERAMIC 4.7pF +/-0.5pF 50V NPO MULTILAYER, SURFACE-MOUNTED, SIZE 0805, NICKEL	ROHM ELECTRONICS LTD	MCH21-5A-4R7-DP
C130	26386/777	CAPACITOR-FIXED CERAMIC 47nF +/-20% 63V X7R/2C1, MULTILAYER, SURFACE-MOUNTED, SIZE 1206, NICKEL	PHILIPS	1206-2R-473-K9-BBC
C131 to C133	26386/863	CAPACITOR-FIXED CERAMIC 1nF +/-10% 50V X7R/2C1, MULTILAYER, SURFACE-MOUNTED, SIZE 0805, NICKEL	ROHM ELECTRONICS LTD	MCH21-5C-102-KP
C134 to C136	26386/777	CAPACITOR-FIXED CERAMIC 47nF +/-20% 63V X7R/2C1, MULTILAYER, SURFACE-MOUNTED, SIZE 1206, NICKEL	PHILIPS	1206-2R-473-K9-BBC
C137	26386/899	CAPACITOR-FIXED CERAMIC 100nF +/-10% 50V X7R/2C1, MULTILAYER, SURFACE-MOUNTED, SIZE 1206, NICKEL	ROHM ELECTRONICS LTD	MCH31-5C-104-KP
C138	26386/899	CAPACITOR-FIXED CERAMIC 100nF +/-10% 50V X7R/2C1, MULTILAYER, SURFACE-MOUNTED, SIZE 1206, NICKEL	ROHM ELECTRONICS LTD	MCH31-5C-104-KP
C140	26582/427	CAPACITOR-FIXED POLYESTER 470nF +/-10% 63V 330 ppm/DEG.C, RADIAL, 5mm PWP, (TAPED).	VISHAY COMPONENTS	MKT-1826-447/065
C141	26386/899	CAPACITOR-FIXED CERAMIC 100nF +/-10% 50V X7R/2C1, MULTILAYER, SURFACE-MOUNTED, SIZE 1206, NICKEL	ROHM ELECTRONICS LTD	MCH31-5C-104-KP
C142	26386/760	CAPACITOR-FIXED CERAMIC 220nF +/-10% 50V X7R MULTILAYER, SURFACE-MOUNTED, SIZE 1210, NICKEL	PHILIPS	1210-2R-224-K9-BBC
C144	26451/003	CAPACITOR-FIXED ALUMINIUM 10uF +/-20% 16V ELECTROLYTIC, SURFACE-MOUNTED, SIZE 4.3 x 4.3mm.	PANASONIC INDUSTRIAL	ECE-V-1CA-100R
C150	26386/824	CAPACITOR-FIXED CERAMIC 100pF +/-5% 50V NP0 MULTILAYER, SURFACE-MOUNTED, SIZE 0805, NICKEL	ROHM ELECTRONICS LTD	MCH21-5A-101-JP
C151	26386/824	CAPACITOR-FIXED CERAMIC 100pF +/-5% 50V NP0 MULTILAYER, SURFACE-MOUNTED, SIZE 0805, NICKEL	ROHM ELECTRONICS LTD	MCH21-5A-101-JP
C152	26386/777	CAPACITOR-FIXED CERAMIC 47nF +/-20% 63V X7R/2C1, MULTILAYER, SURFACE-MOUNTED, SIZE 1206, NICKEL	PHILIPS	1206-2R-473-K9-BBC
C153	26386/863	CAPACITOR-FIXED CERAMIC 1nF +/-10% 50V X7R/2C1, MULTILAYER, SURFACE-MOUNTED, SIZE 0805, NICKEL	ROHM ELECTRONICS LTD	MCH21-5C-102-KP
C154	26386/827	CAPACITOR-FIXED CERAMIC 180pF +/-5% 50V NP0 MULTILAYER, SURFACE-MOUNTED, SIZE 0805, NICKEL	ROHM ELECTRONICS LTD	MCH21-5A-181-JP
C155	26386/830	CAPACITOR-FIXED CERAMIC 330pF +/-5% 50V NP0 MULTILAYER, SURFACE-MOUNTED, SIZE 0805, NICKEL	ROHM ELECTRONICS LTD	MCH21-5A-331-JP
C156	26386/777	CAPACITOR-FIXED CERAMIC 47nF +/-20% 63V X7R/2C1, MULTILAYER, SURFACE-MOUNTED, SIZE 1206, NICKEL	PHILIPS	1206-2R-473-K9-BBC
C157	26386/899	CAPACITOR-FIXED CERAMIC 100nF +/-10% 50V X7R/2C1, MULTILAYER, SURFACE-MOUNTED, SIZE 1206, NICKEL	ROHM ELECTRONICS LTD	MCH31-5C-104-KP
C158	26386/899	CAPACITOR-FIXED CERAMIC 100nF +/-10% 50V X7R/2C1, MULTILAYER, SURFACE-MOUNTED, SIZE 1206, NICKEL	ROHM ELECTRONICS LTD	MCH31-5C-104-KP
C160	26386/777	CAPACITOR-FIXED CERAMIC 47nF +/-20% 63V X7R/2C1, MULTILAYER, SURFACE-MOUNTED, SIZE 1206, NICKEL	PHILIPS	1206-2R-473-K9-BBC
C161	26386/826	CAPACITOR-FIXED CERAMIC 150pF +/-5% 50V NPO MULTILAYER, SURFACE-MOUNTED, SIZE 0805, NICKEL	ROHM ELECTRONICS LTD	MCH21-5A-151-JP
C162	26386/824	CAPACITOR-FIXED CERAMIC 100pF +/-5% 50V NP0 MULTILAYER, SURFACE-MOUNTED, SIZE 0805, NICKEL	ROHM ELECTRONICS LTD	MCH21-5A-101-JP
C163	26386/830	CAPACITOR-FIXED CERAMIC 330pF +/-5% 50V NP0 MULTILAYER, SURFACE-MOUNTED, SIZE 0805, NICKEL	ROHM ELECTRONICS LTD	MCH21-5A-331-JP
C164	26386/824	CAPACITOR-FIXED CERAMIC 100pF +/-5% 50V NP0 MULTILAYER, SURFACE-MOUNTED, SIZE 0805, NICKEL	ROHM ELECTRONICS LTD	MCH21-5A-101-JP
C165	26386/777	CAPACITOR-FIXED CERAMIC 47nF +/-20% 63V X7R/2C1, MULTILAYER, SURFACE-MOUNTED, SIZE 1206, NICKEL	PHILIPS	1206-2R-473-K9-BBC

Cir. Ref.	MI part number	Description	Manufacturer	Manufacturer's part number
Audio processor board B1/2 (contd.)				
C166	26451/010	CAPACITOR-FIXED ALUMINIUM 100uF +/-20% 6.3V ELECTROLYTIC, SURFACE-MOUNTED, SIZE 6.6 x 6.6mm,	PANASONIC INDUSTRIAL	ECE-V-0JA-101P
C167	26343/435	CAPACITOR-FIXED CERAMIC 220pF +/-2% 63V N750 SINGLELAYER, RADIAL, 2.5mm PWP, (TAPED).	VISHAY COMPONENTS	ROU-221-GAK-ACR-J
C168	26343/435	CAPACITOR-FIXED CERAMIC 220pF +/-2% 63V N750 SINGLELAYER, RADIAL, 2.5mm PWP, (TAPED).	VISHAY COMPONENTS	ROU-221-GAK-ACR-J
C169	26386/760	CAPACITOR-FIXED CERAMIC 220nF +/-10% 50V X7R MULTILAYER, SURFACE-MOUNTED, SIZE 1210, NICKEL	PHILIPS	1210-2R-224-K9-BBC
C170	26343/923	CAPACITOR-FIXED CERAMIC 1.5nF +/-1% 63V NP0 MULTILAYER, RADIAL, 5.08mm PWP, (LOOSE).	AVX LTD	SR21-5A-152-FAA
C171	26343/937	CAPACITOR-FIXED CERAMIC 5.6nF +/-1% 63V NP0 MULTILAYER, RADIAL, 5.08mm PWP, (LOOSE).	AVX LTD	SR21-5A-562-FAA
C172	26343/935	CAPACITOR-FIXED CERAMIC 4.7nF +/-1% 63V NP0 MULTILAYER, RADIAL, 5.08mm PWP, (LOOSE OR TAPED).	AVX LTD	SR21-5A-472-FAA
C175	26451/005	CAPACITOR-FIXED ALUMINIUM 22uF +/-20% 6.3V ELECTROLYTIC, SURFACE-MOUNTED, SIZE 4.3 x 4.3mm,	PANASONIC INDUSTRIAL	ECE-V-0JA-220R
C180	26386/899	CAPACITOR-FIXED CERAMIC 100nF +/-10% 50V X7R/2C1, MULTILAYER, SURFACE-MOUNTED, SIZE 1206, NICKEL	ROHM ELECTRONICS LTD	MCH31-5C-104-KP
C181	26386/899	CAPACITOR-FIXED CERAMIC 100nF +/-10% 50V X7R/2C1, MULTILAYER, SURFACE-MOUNTED, SIZE 1206, NICKEL	ROHM ELECTRONICS LTD	MCH31-5C-104-KP
C182	26343/943	CAPACITOR-FIXED CERAMIC 10nF +/-1% 50V NP0 MULTILAYER, RADIAL, 5.08mm PWP, (LOOSE OR TAPED).	AVX LTD	SR30-5A-103-FAT
C183	26343/911	CAPACITOR-FIXED CERAMIC 470pF +/-1% 63V NP0 MULTILAYER, RADIAL, 5.08mm PWP, (LOOSE OR TAPED).	AVX LTD	SR21-5A471-FAA-TR
C184	26343/438	CAPACITOR-FIXED CERAMIC 120pF +/-2% 63V N150 SINGLELAYER, RADIAL, 2.5mm PWP, (TAPED).	VISHAY COMPONENTS	ROP-121-GAK-ACR-J
C186	26343/917	CAPACITOR-FIXED CERAMIC 820pF +/-1% 63V NP0 MULTILAYER, RADIAL, 5.08mm PWP, (LOOSE OR TAPED).	AVX LTD	SR21-5A-821-FAA
C187	26386/760	CAPACITOR-FIXED CERAMIC 220nF +/-10% 50V X7R MULTILAYER, SURFACE-MOUNTED, SIZE 1210, NICKEL	PHILIPS	1210-2R-224-K9-BBC
C188	26386/875	CAPACITOR-FIXED CERAMIC 10nF +/-10% 50V X7R/2C1, MULTILAYER, SURFACE-MOUNTED, SIZE 0805, NICKEL	ROHM ELECTRONICS LTD	MCH21-5C-103-KP
C189	26386/875	CAPACITOR-FIXED CERAMIC 10nF +/-10% 50V X7R/2C1, MULTILAYER, SURFACE-MOUNTED, SIZE 0805, NICKEL	ROHM ELECTRONICS LTD	MCH21-5C-103-KP
C191	26386/992	CAPACITOR-FIXED CERAMIC 330nF +/-10% 50V X7R, MULTILAYER, SURFACE-MOUNTED, SIZE 1812, NICKEL	PHILIPS	1812-2B-334-K9BB
C200	26386/899	CAPACITOR-FIXED CERAMIC 100nF +/-10% 50V X7R/2C1, MULTILAYER, SURFACE-MOUNTED, SIZE 1206, NICKEL	ROHM ELECTRONICS LTD	MCH31-5C-104-KP
C201	26386/800	CAPACITOR-FIXED CERAMIC 1pF +/-0.5pF 50V NP0 MULTILAYER, SURFACE-MOUNTED, SIZE 0805, NICKEL	ROHM ELECTRONICS LTD	MCH21-5A-1R0-DP
C202	26386/875	CAPACITOR-FIXED CERAMIC 10nF +/-10% 50V X7R/2C1, MULTILAYER, SURFACE-MOUNTED, SIZE 0805, NICKEL	ROHM ELECTRONICS LTD	MCH21-5C-103-KP
C204	26451/006	CAPACITOR-FIXED ALUMINIUM 22uF +/-20% 16V ELECTROLYTIC, SURFACE-MOUNTED, SIZE 5.3 x 5.3mm,	RUBYCON CAPACITORS	16-REV-22
C205	26451/006	CAPACITOR-FIXED ALUMINIUM 22uF +/-20% 16V ELECTROLYTIC, SURFACE-MOUNTED, SIZE 5.3 x 5.3mm,	RUBYCON CAPACITORS	16-REV-22
C206	26386/808	CAPACITOR-FIXED CERAMIC 4.7pF +/-0.5pF 50V NPO MULTILAYER, SURFACE-MOUNTED, SIZE 0805, NICKEL	ROHM ELECTRONICS LTD	MCH21-5A-4R7-DP
C210	26451/010	CAPACITOR-FIXED ALUMINIUM 100uF +/-20% 6.3V ELECTROLYTIC, SURFACE-MOUNTED, SIZE 6.6 x 6.6mm,	PANASONIC INDUSTRIAL	ECE-V-0JA-101P
C211	26451/010	CAPACITOR-FIXED ALUMINIUM 100uF +/-20% 6.3V ELECTROLYTIC, SURFACE-MOUNTED, SIZE 6.6 x 6.6mm,	PANASONIC INDUSTRIAL	ECE-V-0JA-101P

Cir. Ref.	MI part number	Description	Manufacturer	Manufacturer's part number
Audio processor board B1/2 (contd.)				
C218	26386/816	CAPACITOR-FIXED CERAMIC 22pF +/-5% 50V NPO MULTILAYER, SURFACE-MOUNTED, SIZE 0805, NICKEL	ROHM ELECTRONICS LTD	MCH21-5A-220-JP
C219	26386/816	CAPACITOR-FIXED CERAMIC 22pF +/-5% 50V NPO MULTILAYER, SURFACE-MOUNTED, SIZE 0805, NICKEL	ROHM ELECTRONICS LTD	MCH21-5A-220-JP
C220	26386/760	CAPACITOR-FIXED CERAMIC 220nF +/-10% 50V X7R MULTILAYER, SURFACE-MOUNTED, SIZE 1210, NICKEL	PHILIPS	1210-2R-224-K9-BBC
C221	26343/438	CAPACITOR-FIXED CERAMIC 120pF +/-2% 63V N150 SINGLELAYER, RADIAL, 2.5mm PWP, (TAPED).	VISHAY COMPONENTS	ROP-121-GAK-ACR-J
C222	26343/436	CAPACITOR-FIXED CERAMIC 270pF +/-2% 63V N750 SINGLELAYER, RADIAL, 2.5mm PWP, (TAPED).	VISHAY COMPONENTS	ROU-271-GAK-ACR-J
C230	26421/152	CAPACITOR-FIXED ALUMINIUM 220uF +/-20% 16V ELECTROLYTIC, RADIAL, 5mm PWP, 9mm MAX BODY DIA,	VISHAY COMPONENTS	EKS-00-CC-322-D-C0
C231	26421/152	CAPACITOR-FIXED ALUMINIUM 220uF +/-20% 16V ELECTROLYTIC, RADIAL, 5mm PWP, 9mm MAX BODY DIA,	VISHAY COMPONENTS	EKS-00-CC-322-D-C0
C232	26451/005	CAPACITOR-FIXED ALUMINIUM 22uF +/-20% 6.3V ELECTROLYTIC, SURFACE-MOUNTED, SIZE 4.3 x 4.3mm,	PANASONIC INDUSTRIAL	ECE-V-0JA-220R
C234 to C239	26386/899	CAPACITOR-FIXED CERAMIC 100nF +/-10% 50V X7R/2C1, MULTILAYER, SURFACE-MOUNTED, SIZE 1206, NICKEL	ROHM ELECTRONICS LTD	MCH31-5C-104-KP
C241	26421/153	CAPACITOR-FIXED ALUMINIUM 470uF +/-20% 6.3V ELECTROLYTIC, RADIAL, 5mm PWP, 9mm MAX BODY DIA,	VISHAY COMPONENTS	EKS-00-CC-347-C-C0
C242	26386/899	CAPACITOR-FIXED CERAMIC 100nF +/-10% 50V X7R/2C1, MULTILAYER, SURFACE-MOUNTED, SIZE 1206, NICKEL	ROHM ELECTRONICS LTD	MCH31-5C-104-KP
C243	26421/153	CAPACITOR-FIXED ALUMINIUM 470uF +/-20% 6.3V ELECTROLYTIC, RADIAL, 5mm PWP, 9mm MAX BODY DIA,	VISHAY COMPONENTS	EKS-00-CC-347-C-C0
C244	26386/899	CAPACITOR-FIXED CERAMIC 100nF +/-10% 50V X7R/2C1, MULTILAYER, SURFACE-MOUNTED, SIZE 1206, NICKEL	ROHM ELECTRONICS LTD	MCH31-5C-104-KP
C250 to C255	26386/875	CAPACITOR-FIXED CERAMIC 10nF +/-10% 50V X7R/2C1, MULTILAYER, SURFACE-MOUNTED, SIZE 0805, NICKEL	ROHM ELECTRONICS LTD	MCH21-5C-103-KP
C260	26386/816	CAPACITOR-FIXED CERAMIC 22pF +/-5% 50V NPO MULTILAYER, SURFACE-MOUNTED, SIZE 0805, NICKEL	ROHM ELECTRONICS LTD	MCH21-5A-220-JP
C261 to C264	26343/935	CAPACITOR-FIXED CERAMIC 4.7nF +/-1% 63V NP0 MULTILAYER, RADIAL, 5.08mm PWP, (LOOSE OR TAPED).	AVX LTD	SR21-5A-472-FAA
C265	26386/760	CAPACITOR-FIXED CERAMIC 220nF +/-10% 50V X7R MULTILAYER, SURFACE-MOUNTED, SIZE 1210, NICKEL	PHILIPS	1210-2R-224-K9-BBC
C267	26451/010	CAPACITOR-FIXED ALUMINIUM 100uF +/-20% 6.3V ELECTROLYTIC, SURFACE-MOUNTED, SIZE 6.6 x 6.6mm,	PANASONIC INDUSTRIAL	ECE-V-0JA-101P
C268	26386/818	CAPACITOR-FIXED CERAMIC 33pF +/-5% 50V NP0 MULTILAYER, SURFACE-MOUNTED, SIZE 0805, NICKEL	ROHM ELECTRONICS LTD	MCH21-5A-330-JP
C269	26386/816	CAPACITOR-FIXED CERAMIC 22pF +/-5% 50V NPO MULTILAYER, SURFACE-MOUNTED, SIZE 0805, NICKEL	ROHM ELECTRONICS LTD	MCH21-5A-220-JP
C270	26343/788	CAPACITOR-FIXED CERAMIC 680pF +/-5% 50V NPO MULTILAYER, SURFACE-MOUNTED, SIZE 0805, NICKEL	ROHM ELECTRONICS LTD	MCH21-5A-681-JP
C271 to C278	26386/875	CAPACITOR-FIXED CERAMIC 10nF +/-10% 50V X7R/2C1, MULTILAYER, SURFACE-MOUNTED, SIZE 0805, NICKEL	ROHM ELECTRONICS LTD	MCH21-5C-103-KP
C279	26386/867	CAPACITOR-FIXED CERAMIC 2.2nF +/-10% 50V X7R/2C1, MULTILAYER, SURFACE-MOUNTED, SIZE 0805, NICKEL	ROHM ELECTRONICS LTD	MCH21-5C-222-KP
C280	26582/426	CAPACITOR-FIXED POLYESTER 10nF +/-10% 63V 330 ppm/DEG.C, RADIAL, 5mm PWP, (TAPED).	DUBILIER CAPACITORS	MMP-10nF-K-63V-T/R
C281	26582/440	CAPACITOR-FIXED POLYESTER 4.7nF +/-10% 63V 330 ppm/DEG.C, RADIAL, 5mm PWP, (TAPED).	DUBILIER CAPACITORS	MMP-4.7nF-K-63V-T/R
C282 to C287	26343/943	CAPACITOR-FIXED CERAMIC 10nF +/-1% 50V NP0 MULTILAYER, RADIAL, 5.08mm PWP, (LOOSE OR TAPED).	AVX LTD	SR30-5A-103-FAT

Audio processor board B1/2 (contd.)

Cir. Ref.	MI part number	Description	Manufacturer	Manufacturer's part number
C288	26343/921	CAPACITOR-FIXED CERAMIC 1.2nF +/-1% 63V NP0 MULTILAYER, RADIAL, 5.08mm PWP, (LOOSE OR TAPED).	AVX LTD	SR21-5A-122-FAA
C289	26356/881	CAPACITOR-FIXED CERAMIC 33nF +/-10% 50V X7R/2C1, MULTILAYER, SURFACE-MOUNTED, SIZE 1210, NICKEL	ROHM ELECTRONICS LTD	MCH32-5C-333-KP
C290	26386/832	CAPACITOR-FIXED CERAMIC 470pF +/-5% 50V NPO MULTILAYER, SURFACE-MOUNTED, SIZE 0805, NICKEL	ROHM ELECTRONICS LTD	MCH21-5A-471-JP
C291	26386/877	CAPACITOR-FIXED CERAMIC 15nF +/-10% 50V X7R/2C1, MULTILAYER, SURFACE-MOUNTED, SIZE 0805, NICKEL	ROHM ELECTRONICS LTD	MCH21-5C-153-KP
C292	26386/875	CAPACITOR-FIXED CERAMIC 10nF +/-10% 50V X7R/2C1, MULTILAYER, SURFACE-MOUNTED, SIZE 0805, NICKEL	ROHM ELECTRONICS LTD	MCH21-5C-103-KP
C293	26386/865	CAPACITOR-FIXED CERAMIC 1.5nF +/-10% 50V X7R/2C1, MULTILAYER, SURFACE-MOUNTED, SIZE 0805, NICKEL	ROHM ELECTRONICS LTD	MCH21-5C-152-KP
C294	26386/863	CAPACITOR-FIXED CERAMIC 1nF +/-10% 50V X7R/2C1, MULTILAYER, SURFACE-MOUNTED, SIZE 0805, NICKEL	ROHM ELECTRONICS LTD	MCH21-5C-102-KP
C295	26386/759	CAPACITOR-FIXED CERAMIC 22nF +/-20% 50V X7R/2C1, MULTILAYER, SURFACE-MOUNTED, SIZE 1206, NICKEL	PHILIPS	1206-2R-223-K9-BBC
C296	26386/863	CAPACITOR-FIXED CERAMIC 1nF +/-10% 50V X7R/2C1, MULTILAYER, SURFACE-MOUNTED, SIZE 0805, NICKEL	ROHM ELECTRONICS LTD	MCH21-5C-102-KP
C297	26386/863	CAPACITOR-FIXED CERAMIC 1nF +/-10% 50V X7R/2C1, MULTILAYER, SURFACE-MOUNTED, SIZE 0805, NICKEL	ROHM ELECTRONICS LTD	MCH21-5C-102-KP
C298	26451/003	CAPACITOR-FIXED ALUMINIUM 10uF +/-20% 16V ELECTROLYTIC, SURFACE-MOUNTED, SIZE 4.3 x 4.3mm,	PANASONIC INDUSTRIAL	ECE-V-1CA-100R
C299	26386/760	CAPACITOR-FIXED CERAMIC 220nF +/-10% 50V X7R MULTILAYER, SURFACE-MOUNTED, SIZE 1210, NICKEL	PHILIPS	1210-2R-224-K9-BBC
C300	26386/777	CAPACITOR-FIXED CERAMIC 47nF +/-20% 63V X7R/2C1, MULTILAYER, SURFACE-MOUNTED, SIZE 1206, NICKEL	PHILIPS	1206-2R-473-K9-BBC
C301	26386/875	CAPACITOR-FIXED CERAMIC 10nF +/-10% 50V X7R/2C1, MULTILAYER, SURFACE-MOUNTED, SIZE 0805, NICKEL	ROHM ELECTRONICS LTD	MCH21-5C-103-KP
C302	26421/153	CAPACITOR-FIXED ALUMINIUM 470uF +/-20% 6.3V ELECTROLYTIC, RADIAL, 5mm PWP, 9mm MAX BODY DIA,	VISHAY COMPONENTS	EKS-00-CC-347-C-C0
C303	26451/010	CAPACITOR-FIXED ALUMINIUM 100uF +/-20% 6.3V ELECTROLYTIC, SURFACE-MOUNTED, SIZE 6.6 x 6.6mm,	PANASONIC INDUSTRIAL	ECE-V-0JA-101P
C304	26421/153	CAPACITOR-FIXED ALUMINIUM 470uF +/-20% 6.3V ELECTROLYTIC, RADIAL, 5mm PWP, 9mm MAX BODY DIA,	VISHAY COMPONENTS	EKS-00-CC-347-C-C0
C305	26386/899	CAPACITOR-FIXED CERAMIC 100nF +/-10% 50V X7R/2C1, MULTILAYER, SURFACE-MOUNTED, SIZE 1206, NICKEL	ROHM ELECTRONICS LTD	MCH31-5C-104-KP
C306	26386/899	CAPACITOR-FIXED CERAMIC 100nF +/-10% 50V X7R/2C1, MULTILAYER, SURFACE-MOUNTED, SIZE 1206, NICKEL	ROHM ELECTRONICS LTD	MCH31-5C-104-KP
C307	26451/005	CAPACITOR-FIXED ALUMINIUM 22uF +/-20% 6.3V ELECTROLYTIC, SURFACE-MOUNTED, SIZE 4.3 x 4.3mm,	PANASONIC INDUSTRIAL	ECE-V-0JA-220R
C308	26386/875	CAPACITOR-FIXED CERAMIC 10nF +/-10% 50V X7R/2C1, MULTILAYER, SURFACE-MOUNTED, SIZE 0805, NICKEL	ROHM ELECTRONICS LTD	MCH21-5C-103-KP
C309	26386/867	CAPACITOR-FIXED CERAMIC 2.2nF +/-10% 50V X7R/2C1, MULTILAYER, SURFACE-MOUNTED, SIZE 0805, NICKEL	ROHM ELECTRONICS LTD	MCH21-5C-222-KP
C310 to C314	26386/875	CAPACITOR-FIXED CERAMIC 10nF +/-10% 50V X7R/2C1, MULTILAYER, SURFACE-MOUNTED, SIZE 0805, NICKEL	ROHM ELECTRONICS LTD	MCH21-5C-103-KP
C367	26343/446	CAPACITOR-FIXED CERAMIC 180pF +/-2% 63V N750 SINGLELAYER, RADIAL, 2.5mm PWP, (TAPED).	VISHAY COMPONENTS	ROU-181-GAK-ACR-J
C368	26343/446	CAPACITOR-FIXED CERAMIC 180pF +/-2% 63V N750 SINGLELAYER, RADIAL, 2.5mm PWP, (TAPED).	VISHAY COMPONENTS	ROU-181-GAK-ACR-J

Cir. Ref.	MI part number	Description	Manufacturer	Manufacturer's part number
Audio processor board B1/2 (contd.)				
D1	28371/494	DIODE VOLTAGE REFERENCE, 1N825... 250mW 6.2V 5% 50mA 20ppm/DEG.C, AXIAL, DO-7, (TAPED).	PHILIPS	1N825
D2	28357/030	DIODE RECTIFIER, 4004... 400V 1A 1.2Vf @ 1A, SURFACE MOUNTED, MELF, (12mmTAPE - 7"REEL).	ROHM ELECTRONICS LTD	RLR4004-TE23C
D3	28357/030	DIODE RECTIFIER, 4004... 400V 1A 1.2Vf @ 1A, SURFACE MOUNTED, MELF, (12mmTAPE - 7"REEL).	ROHM ELECTRONICS LTD	RLR4004-TE23C
D4	28371/494	DIODE VOLTAGE REFERENCE, 1N825... 250mW 6.2V 5% 50mA 20ppm/DEG.C, AXIAL, DO-7, (TAPED).	PHILIPS	1N825
D40	28383/903	DIODE SMALL-SIGNAL, BAV99... DUAL, 70V 100mA 1.1Vf @ 50mA, IN SERIES, MARKING CODE A7, SURFACE	PHILIPS	BAV99 (A7)
D70	28383/934	DIODE SMALL-SIGNAL, LL4148... 500mW 50V 150mA 1Vf @ 10mA, SURFACE MOUNTED, MINI-MELF, (8mm TAPE -	PHILIPS	PMLL4148L
D71	28383/936	DIODE SMALL-SIGNAL, SCHOTTKY, LL103B... 300mW 30V 1A 0.7Vf @ 500mA, SURFACE MOUNTED, MINI-MELF, (8mm	SGS-THOMSON	TMMBAT48
D100 to D105	28383/932	DIODE PIN, HSMP-3810... 250mW 100V 1A 0.35pF Rs 4R0 MAX @ 100mA, MARKING CODE E0, LOW PROFILE,	HEWLETT-PACKARD	HSMP-3810-L31
D106 to D111	28383/933	DIODE BAND SWITCHING, BA582... 35V 100mA 1.1pF MAX @ 3V, SURFACE MOUNTED, SOD-123, (8mm TAPE -	SIEMENS LTD	BA582
D150 to D182	28383/936	DIODE SMALL-SIGNAL, SCHOTTKY, LL103B... 300mW 30V 1A 0.7Vf @ 500mA, SURFACE MOUNTED, MINI-MELF, (8mm	SGS-THOMSON	TMMBAT48
D200 to D300	28383/934	DIODE SMALL-SIGNAL, LL4148... 500mW 50V 150mA 1Vf @ 10mA, SURFACE MOUNTED, MINI-MELF, (8mm TAPE -	PHILIPS	PMLL4148L
IC1	28469/638	IC-DIGITAL ARRAY-LOGIC AMI6703-012... AUDIO SYNTHESIZER TO MI CUSTOM SPEC, CMOS, 68 PIN, PLCC.	AMERICAN MICROSYSTEM	AMI6703-012
IC2	28469/638	IC-DIGITAL ARRAY-LOGIC AMI6703-012... AUDIO SYNTHESIZER TO MI CUSTOM SPEC, CMOS, 68 PIN, PLCC.	AMERICAN MICROSYSTEM	AMI6703-012
IC5	28461/005	IC-ANALOGUE D/A-CONVERTER 7524... 15V 8 BIT, BUFFERED, MULTIPLYING, REL-ACC +/-1/2LSB, GAIN-ERR	ANALOG DEVICES LTD	PM7524FS
IC6	28461/005	IC-ANALOGUE D/A-CONVERTER 7524... 15V 8 BIT, BUFFERED, MULTIPLYING, REL-ACC +/-1/2LSB, GAIN-ERR	ANALOG DEVICES LTD	PM7524FS
IC7	28462/638	IC-DIGITAL FLIP-FLOP/D-TYPE 74HC74... 2 BIT, DUAL, POS EDGE TRIGGER, PLUS SET & CLEAR, CMOS-H/SPEED,	PHILIPS	74HC74D
IC8	28466/390	IC-DIGITAL NAND-GATE 74HC00... 2 INPUT, QUAD, CMOS-H/SPEED, 14 PIN, SMALL-OUTLINE.	PHILIPS	74HC00D
IC9	28461/437	IC-ANALOGUE OPERATIONAL AMP 5534... 2 INPUT, SINGLE, 10V 16mA LOW NOISE, 10MHz, BIPOLAR, 8 PIN,	PHILIPS	NE5534D
IC10	28461/437	IC-ANALOGUE OPERATIONAL AMP 5534... 2 INPUT, SINGLE, 10V 16mA LOW NOISE, 10MHz, BIPOLAR, 8 PIN,	PHILIPS	NE5534D
IC11	28461/413	IC-ANALOGUE OPERATIONAL AMP TL074... QUAD, JFET INPUT, LOW NOISE, SLEW RATE 8V/uS MIN, GAIN	MOTOROLA INC.	TL074CD
IC12	28461/412	IC-ANALOGUE OPERATIONAL AMP TL072... DUAL, 18V UNITY GAIN BNDWDTH 3MHz, OFFSET VOLTAGE 10mV, SLEW	MOTOROLA INC.	TL072CD
IC13	28461/999	IC-ANALOGUE SWITCH DG441... QUAD, 15V SPST, ON-RESISTANCE<85R, 4 x N/O @ LOGIC 1, TTL	TEMIC UK LTD	DG441DY
IC15	28461/846	IC-ANALOGUE D/A-CONVERTER 7545... 15V 12 BIT, BUFFERED, MULTIPLYING, REL-ACC +/-1 LSB, GAIN-ERR	ANALOG DEVICES LTD	AD7545AKR
IC16	28461/846	IC-ANALOGUE D/A-CONVERTER 7545... 15V 12 BIT, BUFFERED, MULTIPLYING, REL-ACC +/-1 LSB, GAIN-ERR	ANALOG DEVICES LTD	AD7545AKR
IC17	28461/413	IC-ANALOGUE OPERATIONAL AMP TL074... QUAD, JFET INPUT, LOW NOISE, SLEW RATE 8V/uS MIN, GAIN	MOTOROLA INC.	TL074CD

Cir. Ref.	MI part number	Description	Manufacturer	Manufacturer's part number
Audio processor board B1/2 (contd.)				
IC18	28461/845	IC-ANALOGUE SWITCH 74HC4316... QUAD, BILATERAL, WITH COMMON ENABLE, CMOS-H/SPEED, 16 PIN,	PHILIPS	74HC4316D
IC19	28461/495	IC-ANALOGUE AUDIO-AMPLIFIER TDA2030... SINGLE, 28V 14W, MONOLITHIC, 5 PIN, TO-220.	SGS-THOMSON	TDA2030H
IC20	28461/846	IC-ANALOGUE D/A-CONVERTER 7545... 15V 12 BIT, BUFFERED, MULTIPLYING, REL-ACC +/-1 LSB, GAIN-ERR	ANALOG DEVICES LTD	AD7545AKR
IC21	28461/413	IC-ANALOGUE OPERATIONAL AMP TL074... QUAD, JFET INPUT, LOW NOISE, SLEW RATE 8V/uS MIN, GAIN	MOTOROLA INC.	TL074CD
IC22	28461/999	IC-ANALOGUE SWITCH DG441... QUAD, 15V SPST, ON-RESISTANCE<85R, 4 x N/O @ LOGIC 1, TTL	TEMIC UK LTD	DG441DY
IC23	28461/413	IC-ANALOGUE OPERATIONAL AMP TL074... QUAD, JFET INPUT, LOW NOISE, SLEW RATE 8V/uS MIN, GAIN	MOTOROLA INC.	TL074CD
IC24	28461/999	IC-ANALOGUE SWITCH DG441... QUAD, 15V SPST, ON-RESISTANCE<85R, 4 x N/O @ LOGIC 1, TTL	TEMIC UK LTD	DG441DY
IC25	28461/846	IC-ANALOGUE D/A-CONVERTER 7545... 15V 12 BIT, BUFFERED, MULTIPLYING, REL-ACC +/-1 LSB, GAIN-ERR	ANALOG DEVICES LTD	AD7545AKR
IC26	28461/413	IC-ANALOGUE OPERATIONAL AMP TL074... QUAD, JFET INPUT, LOW NOISE, SLEW RATE 8V/uS MIN, GAIN	MOTOROLA INC.	TL074CD
IC27	28461/846	IC-ANALOGUE D/A-CONVERTER 7545... 15V 12 BIT, BUFFERED, MULTIPLYING, REL-ACC +/-1 LSB, GAIN-ERR	ANALOG DEVICES LTD	AD7545AKR
IC28	28461/005	IC-ANALOGUE D/A-CONVERTER 7524... 15V 8 BIT, BUFFERED, MULTIPLYING, REL-ACC +/-1/2LSB, GAIN-ERR	ANALOG DEVICES LTD	PM7524FS
IC29	28461/999	IC-ANALOGUE SWITCH DG441... QUAD, 15V SPST, ON-RESISTANCE<85R, 4 x N/O @ LOGIC 1, TTL	TEMIC UK LTD	DG441DY
IC50	28462/157	IC-DIGITAL FLIP-FLOP/D-TYPE 74HC377... OCTAL, POS EDGE TRIGGER WITH DATA ENABLE, CMOS-H/SPEED, 20	PHILIPS	74HC377D
IC52	28465/055	IC-DIGITAL DECODER/DEMULTIPLEX 74HC138... 3 INPUT, 8 BIT, SINGLE, INVERTING, 3 BIT ADDRESS,	PHILIPS	74HC138D
IC53	28465/055	IC-DIGITAL DECODER/DEMULTIPLEX 74HC138... 3 INPUT, 8 BIT, SINGLE, INVERTING, 3 BIT ADDRESS,	PHILIPS	74HC138D
IC54	28469/057	IC-DIGITAL INVERTER 74HC04... HEX, CMOS-H/SPEED, 14 PIN, SMALL-OUTLINE.	PHILIPS	74HC04D
IC55 to IC58	28462/157	IC-DIGITAL FLIP-FLOP/D-TYPE 74HC377... OCTAL, POS EDGE TRIGGER WITH DATA ENABLE, CMOS-H/SPEED, 20	PHILIPS	74HC377D
IC60	28461/774	IC-ANALOGUE VOLTAGE-REGULATOR 78L05AC... 5V +/-5%, POSITIVE, LINEAR, BIPOLAR, 8 PIN, SMALL-OUTLINE.	NAT. SEMICONDUCTOR	LM78L05ACM
IC61	28461/780	IC-ANALOGUE VOLTAGE-REGULATOR 79L05AC... 5V 100mA NEGATIVE, LINEAR, 5% REGULATION, MONOLITHIC, 8	NAT. SEMICONDUCTOR	LM79L05ACM
IC70	28461/412	IC-ANALOGUE OPERATIONAL AMP TL072... DUAL, 18V UNITY GAIN BNDWDTH 3MHz, OFFSET VOLTAGE 10mV, SLEW	MOTOROLA INC.	TL072CD
IC71	28461/421	IC-ANALOGUE VOICE-AMPLIFIER SL6270C... SINGLE, 9V 5mA GAIN CONTROLLED PREAMPLIFIER, CMOS, 8 PIN,	GEC PLESSEY SEMICOND	SL6270CDP
IC100	28461/431	IC-ANALOGUE VIDEO DIFF AMPLIFIER 592... 2 INPUT, SINGLE, 8V BANDWDTH-x1 120MHz TYP, GAIN 0 TO 400,	PHILIPS	NE592D8
IC101	28461/844	IC-ANALOGUE MODULATR/DEMODULATOR 1496... 30V BALANCED, SUPPRESSION 50dB @ 10MHz, 3dB SIGNAL	NAT. SEMICONDUCTOR	LM1496M
IC102	28461/532	IC-ANALOGUE OPERATIONAL AMP TBA120T... FM-IF WITH DEMODULATOR, BIPOLAR, 14 PIN, DUAL-IN-LINE.	MARCONI INSTRUMENTS LTD	
IC103	28461/459	IC-ANALOGUE OPERATIONAL AMP TL032... DUAL, 15V U/GAIN BANDWDTH 1.1MHz, OFFSET VOLTAGE 2.0mV, SLEW	TEXAS INSTRUMENTS	TL032CD(TUBE)
IC104	28466/390	IC-DIGITAL NAND-GATE 74HC00... 2 INPUT, QUAD, CMOS-H/SPEED, 14 PIN, SMALL-OUTLINE.	PHILIPS	74HC00D

Cir. Ref.	MI part number	Description	Manufacturer	Manufacturer's part number
Audio processor board B1/2 (contd.)				
IC105	28466/414	IC-DIGITAL EXCLUSIVE-OR 74HC86... 2 INPUT, QUAD, CMOS-H/SPEED, 14 PIN, SMALL-OUTLINE.	PHILIPS	74HC86D
IC106	28469/032	IC-DIGITAL INVERTER 74HC14... HEX, SCHMITT-TRIGGER OPERATION, CMOS-H/SPEED, 14 PIN, SMALL-OUTLINE.	PHILIPS	74HC14D
IC107	28468/325	IC-DIGITAL FLIP-FLOP/MONOSTABLE 74HC4538... DUAL, RETRIGGERABLE, PRECISION, tW=0.7RC, CMOS-H/SPEED,	PHILIPS	74HC4538D
IC108	28461/413	IC-ANALOGUE OPERATIONAL AMP TL074... QUAD, JFET INPUT, LOW NOISE, SLEW RATE 8V/uS MIN, GAIN	MOTOROLA INC.	TL074CD
IC109	28461/845	IC-ANALOGUE SWITCH 74HC4316... QUAD, BILATERAL, WITH COMMON ENABLE, CMOS-H/SPEED, 16 PIN,	PHILIPS	74HC4316D
IC110	28461/845	IC-ANALOGUE SWITCH 74HC4316... QUAD, BILATERAL, WITH COMMON ENABLE, CMOS-H/SPEED, 16 PIN,	PHILIPS	74HC4316D
IC200	28461/411	IC-ANALOGUE OPERATIONAL AMP TL071... SINGLE, JFET INPUT, LOW NOISE, 8 PIN, SMALL-OUTLINE.	MOTOROLA INC.	TL071CD
IC201	28461/411	IC-ANALOGUE OPERATIONAL AMP TL071... SINGLE, JFET INPUT, LOW NOISE, 8 PIN, SMALL-OUTLINE.	MOTOROLA INC.	TL071CD
IC202	28461/806	IC-ANALOGUE OPERATIONAL AMP OP-249... DUAL, PRECISION HI SPEED, SETTLING TIME-1.2uS, GAIN	ANALOG DEVICES LTD	OP-249GS
IC203	28461/437	IC-ANALOGUE OPERATIONAL AMP 5534... 2 INPUT, SINGLE, 10V 16mA LOW NOISE, 10MHz, BIPOLAR, 8 PIN,	PHILIPS	NE5534D
IC204	28461/412	IC-ANALOGUE OPERATIONAL AMP TL072... DUAL, 18V UNITY GAIN BNDWDTH 3MHz, OFFSET VOLTAGE 10mV, SLEW	MOTOROLA INC.	TL072CD
IC205	28461/411	IC-ANALOGUE OPERATIONAL AMP TL071... SINGLE, JFET INPUT, LOW NOISE, 8 PIN, SMALL-OUTLINE.	MOTOROLA INC.	TL071CD
IC206	28461/459	IC-ANALOGUE OPERATIONAL AMP TL032... DUAL, 15V U/GAIN BANDWDTH 1.1MHz, OFFSET VOLTAGE 2.0mV, SLEW	TEXAS INSTRUMENTS	TL032CD(TUBE)
IC207	28461/459	IC-ANALOGUE OPERATIONAL AMP TL032... DUAL, 15V U/GAIN BANDWDTH 1.1MHz, OFFSET VOLTAGE 2.0mV, SLEW	TEXAS INSTRUMENTS	TL032CD(TUBE)
IC208	28461/413	IC-ANALOGUE OPERATIONAL AMP TL074... QUAD, JFET INPUT, LOW NOISE, SLEW RATE 8V/uS MIN, GAIN	MOTOROLA INC.	TL074CD
IC209	28461/412	IC-ANALOGUE OPERATIONAL AMP TL072... DUAL, 18V UNITY GAIN BNDWDTH 3MHz, OFFSET VOLTAGE 10mV, SLEW	MOTOROLA INC.	TL072CD
IC210	28461/029	IC-ANALOGUE SWITCH DG211... QUAD, 15V SPST, ON-RESISTANCE <175R, TTL COMPATIBLE, CMOS, 16 PIN,	ANALOG DEVICES LTD	ADG211AKR
IC211	28461/999	IC-ANALOGUE SWITCH DG441... QUAD, 15V SPST, ON-RESISTANCE<85R, 4 x N/O @ LOGIC 1, TTL	TEMIC UK LTD	DG441DY
IC212	28461/999	IC-ANALOGUE SWITCH DG441... QUAD, 15V SPST, ON-RESISTANCE<85R, 4 x N/O @ LOGIC 1, TTL	TEMIC UK LTD	DG441DY
IC213	28461/029	IC-ANALOGUE SWITCH DG211... QUAD, 15V SPST, ON-RESISTANCE <175R, TTL COMPATIBLE, CMOS, 16 PIN,	ANALOG DEVICES LTD	ADG211AKR
IC214	28461/029	IC-ANALOGUE SWITCH DG211... QUAD, 15V SPST, ON-RESISTANCE <175R, TTL COMPATIBLE, CMOS, 16 PIN,	ANALOG DEVICES LTD	ADG211AKR
IC215	28461/845	IC-ANALOGUE SWITCH 74HC4316... QUAD, BILATERAL, WITH COMMON ENABLE, CMOS-H/SPEED, 16 PIN,	PHILIPS	74HC4316D
IC216	28461/029	IC-ANALOGUE SWITCH DG211... QUAD, 15V SPST, ON-RESISTANCE <175R, TTL COMPATIBLE, CMOS, 16 PIN,	ANALOG DEVICES LTD	ADG211AKR
IC217	28461/029	IC-ANALOGUE SWITCH DG211... QUAD, 15V SPST, ON-RESISTANCE <175R, TTL COMPATIBLE, CMOS, 16 PIN,	ANALOG DEVICES LTD	ADG211AKR
IC218	28461/845	IC-ANALOGUE SWITCH 74HC4316... QUAD, BILATERAL, WITH COMMON ENABLE, CMOS-H/SPEED, 16 PIN,	PHILIPS	74HC4316D
IC219	28461/845	IC-ANALOGUE SWITCH 74HC4316... QUAD, BILATERAL, WITH COMMON ENABLE, CMOS-H/SPEED, 16 PIN,	PHILIPS	74HC4316D

Cir. Ref.	MI part number	Description	Manufacturer	Manufacturer's part number
Audio processor board B1/2 (contd.)				
IC220	28461/413	IC-ANALOGUE OPERATIONAL AMP TL074... QUAD, JFET INPUT, LOW NOISE, SLEW RATE 8V/uS MIN, GAIN	MOTOROLA INC.	TL074CD
IC221	28461/053	IC-ANALOGUE FILTER TLC04... LOW PASS 4th ORDER SWITCHED CAPACITOR, BUTTERWORTH, CUT OFF TO 40KHz,	TEXAS INSTRUMENTS	TLC04CP
IC222	28469/543	IC-DIGITAL COUNTER 74HC390... 4 BIT, DUAL, DECADE RIPPLE, CMOS-H/SPEED, 16 PIN, SMALL-OUTLINE.	PHILIPS	74HC390D
IC223	28469/543	IC-DIGITAL COUNTER 74HC390... 4 BIT, DUAL, DECADE RIPPLE, CMOS-H/SPEED, 16 PIN, SMALL-OUTLINE.	PHILIPS	74HC390D
IC224	28461/837	IC-ANALOGUE PHASE-LOCKED-LOOP 74HC4046A... MAX Vco OPERATING FREQUENCY 12MHz, CMOS-H/SPEED, 16 PIN,	PHILIPS	74HC4046AD
IC225	28466/390	IC-DIGITAL NAND-GATE 74HC00... 2 INPUT, QUAD, CMOS-H/SPEED, 14 PIN, SMALL-OUTLINE.	PHILIPS	74HC00D
IC226	28464/175	IC-DIGITAL COUNTER 74HC191... 4 BIT, SINGLE, BINARY UP/DOWN, SYNCHRONOUS, PRESETTABLE,	PHILIPS	74HC191D
IC227	28464/175	IC-DIGITAL COUNTER 74HC191... 4 BIT, SINGLE, BINARY UP/DOWN, SYNCHRONOUS, PRESETTABLE,	PHILIPS	74HC191D
IC228	28461/412	IC-ANALOGUE OPERATIONAL AMP TL072... DUAL, 18V UNITY GAIN BNDWDTH 3MHz, OFFSET VOLTAGE 10mV, SLEW	MOTOROLA INC.	TL072CD
IC229	28461/437	IC-ANALOGUE OPERATIONAL AMP 5534... 2 INPUT, SINGLE, 10V 16mA LOW NOISE, 10MHz, BIPOLAR, 8 PIN,	PHILIPS	NE5534D
IC230	28466/393	IC-DIGITAL NAND-GATE 74HC132... 2 INPUT, QUAD, SCHMITT TRIGGER, CMOS-H/SPEED, 14 PIN,	PHILIPS	74HC132D
IC231	28461/493	IC-ANALOGUE AUDIO-AMPLIFIER LM386... 2 INPUT, SINGLE, 5V 4mA 325mW OUTPUT, 300KHz BANDWIDTH,	NAT. SEMICONDUCTOR	LM386M-1
IC251	28465/055	IC-DIGITAL DECODER/DEMULTIPLEX 74HC138... 3 INPUT, 8 BIT, SINGLE, INVERTING, 3 BIT ADDRESS,	PHILIPS	74HC138D
IC252 to IC257	28462/157	IC-DIGITAL FLIP-FLOP/D-TYPE 74HC377... OCTAL, POS EDGE TRIGGER WITH DATA ENABLE, CMOS-H/SPEED, 20	PHILIPS	74HC377D
IC258	28465/056	IC-DIGITAL DECODER/DEMULTIPLEX 74HC139... 2 INPUT, 4 BIT, DUAL, INVERTING, 1 BIT ADDRESS,	PHILIPS	74HC139D
IC259	28466/390	IC-DIGITAL NAND-GATE 74HC00... 2 INPUT, QUAD, CMOS-H/SPEED, 14 PIN, SMALL-OUTLINE.	PHILIPS	74HC00D
IC301	28467/101	IC-MICRO CONTROLLER, 82C54... PROGRAMMABLE INTERVAL TIMER, 8MHz, CMOS, 28 PIN, PLCC.	HARRIS SEMICONDUCTOR	CS82C54
IC302	28469/095	IC-DIGITAL BUFFER/LINE-DRIVER 74HC126... QUAD, TRI-STATE, HIGH ENABLE, CMOS-H/SPEED, 14 PIN,	PHILIPS	74HC126D
IC303	28466/241	IC-DIGITAL NOR-GATE 74HC02... 2 INPUT, QUAD, CMOS-H/SPEED, 14 PIN, SMALL-OUTLINE.	PHILIPS	74HC02D
IC304	28464/184	IC-DIGITAL COUNTER 74HC161... 4 INPUT, 4 BIT, SINGLE, BINARY, PRESETTABLE, SYNCHRONOUS,	PHILIPS	74HC161D
IC310	28469/052	IC-DIGITAL BUFFER 74HC365... HEX, TRI-STATE, NON-INVERTING, CMOS-H/SPEED, 16 PIN,	PHILIPS	74HC365D
L1	23642/555	INDUCTOR-FIXED 10uH +/- 10% COATED-LACQUER, MINIATURE, 470mA 0R9 MAX, 45 Q @ 7.9 MHz, 45 MHz	MEGGITT ELECTRONICS	C11-406/8/27520/006
L52	23642/909	WOUND-PART INDUCTOR, WIDEBAND HF CHOKE, BEAD-CORE, 4B1 GRADE MATERIAL, 2.5 TURNS, TINNED COPPER WIRE.	PHILIPS	4312-020-36700
L150	23642/528	INDUCTOR-FIXED 47uH +/- 5% EPOXY-MOULD, 60mA 7R MAX, 30 Q @ 2.52 MHz, 15 MHz SRF, SURFACE MOUNTED,	MEGGITT ELECTRONICS	3612-T-470-J
L160	23642/528	INDUCTOR-FIXED 47uH +/- 5% EPOXY-MOULD, 60mA 7R MAX, 30 Q @ 2.52 MHz, 15 MHz SRF, SURFACE MOUNTED,	MEGGITT ELECTRONICS	3612-T-470-J

Cir. Ref.	MI part number	Description	Manufacturer	Manufacturer's part number
Audio processor board B1/2 (contd.)				
L161	23642/719	INDUCTOR-FIXED 220uH +/- 5% EPOXY-MOULD, 50mA 21R MAX, 20 Q @ 0.796 MHz, 7 MHz SRF, SURFACE MOUNTED,	MEGGITT ELECTRONICS	3612-T-221-J
L162	23642/526	INDUCTOR-FIXED 470uH +/- 10% EPOXY-MOULD, 62mA 26R MAX, 40 Q @ 0.796 MHz, 3 MHz SRF, SURFACE MOUNTED,	MEGGITT ELECTRONICS	3613-T-471-K
L180	23642/524	INDUCTOR-FIXED 1mH +/- 10% EPOXY-MOULD, 30mA 40R MAX, 30 Q @ 0.252 MHz, 2.5 MHz SRF, SURFACE	MEGGITT ELECTRONICS	3613-T-102-K
L230 to L232	23642/701	INDUCTOR-FIXED 2.2uH +/- 5% EPOXY-MOULD, 320mA 1R MAX, 30 Q @ 7.96 MHz, 75 MHz SRF, SURFACE MOUNTED,	MEGGITT ELECTRONICS	3612-T-2R2-J
PLA to PLM	23435/188	TERMINAL CONNECTOR-PIN, 0.64mm SQUARE, 5.97mm HIGH, PCB-MOUNTING, SINGLE-ENDED, PHOSPHOR BRONZE,	BERG ELECTRONICS	75401-001
PLN	23444/334	CONNECTOR-RF SMB-TYPE MALE, RECEPTACLE, 50 OHMS, PCB-MOUNTING, NICKEL PLATED BODY.	ITT CANNON (UK)	051-051-0000-C90
PLP to PLU	23435/188	TERMINAL CONNECTOR-PIN, 0.64mm SQUARE, 5.97mm HIGH, PCB-MOUNTING, SINGLE-ENDED, PHOSPHOR BRONZE,	BERG ELECTRONICS	75401-001
R1	24811/168	RESISTOR-FIXED METAL-FILM 619R +/- 1% 250mW 200V 50 ppm/DEG.C, SURFACE MOUNTED, SIZE MINI-MELF,	VISHAY COMPONENTS	SMM0204-619R-1%50ppm
R2	25748/566	RESISTOR-VARIABLE CERMET LINEAR, 10K 10% 500mW 200V 100 ppm/DEG.C, MULTI-TURN, VERTICAL-PCB,	MEGGITT ELECTRONICS	4290W404/8/06411/103
R4	24811/607	RESISTOR-FIXED METAL-FILM 20K +/- 0.1% 250mW 200V 15 ppm/DEG.C, SURFACE MOUNTED, SIZE MINI-MELF,	VISHAY COMPONENTS	SMM0204-20K0-0.1%-15
R5	24811/602	RESISTOR-FIXED METAL-FILM 10K +/- 0.1% 250mW 200V 15 ppm/DEG.C, SURFACE MOUNTED, SIZE MINI-MELF,	VISHAY COMPONENTS	SMM0204-10K0-0.1%-15
R6	24811/602	RESISTOR-FIXED METAL-FILM 10K +/- 0.1% 250mW 200V 15 ppm/DEG.C, SURFACE MOUNTED, SIZE MINI-MELF,	VISHAY COMPONENTS	SMM0204-10K0-0.1%-15
R7	24811/187	RESISTOR-FIXED METAL-FILM 3K92 +/- 1% 250mW 200V 50 ppm/DEG.C, SURFACE MOUNTED, SIZE MINI-MELF,	VISHAY COMPONENTS	SMM0204-3K92-1%50ppm
R8	24811/189	RESISTOR-FIXED METAL-FILM 4K75 +/- 1% 250mW 200V 50 ppm/DEG.C, SURFACE MOUNTED, SIZE MINI-MELF,	VISHAY COMPONENTS	SMM0204-4K75-1%50ppm
R9	24811/189	RESISTOR-FIXED METAL-FILM 4K75 +/- 1% 250mW 200V 50 ppm/DEG.C, SURFACE MOUNTED, SIZE MINI-MELF,	VISHAY COMPONENTS	SMM0204-4K75-1%50ppm
R10 to R15	24811/197	RESISTOR-FIXED METAL-FILM 10K +/- 1% 250mW 200V 50 ppm/DEG.C, SURFACE MOUNTED, SIZE MINI-MELF, (8mm	VISHAY COMPONENTS	SMM0204-10K-1%50ppm
R16	24811/227	RESISTOR-FIXED METAL-FILM 182K +/- 1% 250mW 200V 50 ppm/DEG.C, SURFACE MOUNTED, SIZE MINI-MELF,	VISHAY COMPONENTS	SMM0204-182K-1%50ppm
R17	24811/226	RESISTOR-FIXED METAL-FILM 162K +/- 1% 250mW 200V 50 ppm/DEG.C, SURFACE MOUNTED, SIZE MINI-MELF,	VISHAY COMPONENTS	SMM0204-162K-1%50ppm
R18	24811/173	RESISTOR-FIXED METAL-FILM 1K +/- 1% 250mW 200V 50 ppm/DEG.C, SURFACE MOUNTED, SIZE MINI-MELF, (8mm	VISHAY COMPONENTS	SMM0204-1K0-1%-50ppm
R19	24811/141	RESISTOR-FIXED METAL-FILM 47R5 +/- 1% 250mW 200V 50 ppm/DEG.C, SURFACE MOUNTED, SIZE MINI-MELF,	VISHAY COMPONENTS	SMM0204-47R5-1%50ppm
R20	24811/602	RESISTOR-FIXED METAL-FILM 10K +/- 0.1% 250mW 200V 15 ppm/DEG.C, SURFACE MOUNTED, SIZE MINI-MELF,	VISHAY COMPONENTS	SMM0204-10K0-0.1%-15
R21	24753/395	RESISTOR-FIXED METAL-FILM 1K07 +/- 0.5% 250mW 200V 50 ppm/DEG.C, AXIAL, (LOOSE OR TAPED).	VISHAY COMPONENTS	EE.10-1K07-D-T-2
R22	24811/125	RESISTOR-FIXED METAL-FILM 10R +/- 1% 250mW 200V 50 ppm/DEG.C, SURFACE MOUNTED, SIZE MINI-MELF, (8mm	VISHAY COMPONENTS	SMM0204-10R-1%-50ppm
R23	24811/125	RESISTOR-FIXED METAL-FILM 10R +/- 1% 250mW 200V 50 ppm/DEG.C, SURFACE MOUNTED, SIZE MINI-MELF, (8mm	VISHAY COMPONENTS	SMM0204-10R-1%-50ppm

Cir. Ref.	MI part number	Description	Manufacturer	Manufacturer's part number
Audio processor board B1/2 (contd.)				
R24	24753/626	RESISTOR-FIXED METAL-FILM 2K +/- 0.5% 250mW 200V 50 ppm/DEG.C, AXIAL, (LOOSE OR TAPED).	VISHAY COMPONENTS	EE.10-2K0-D-T-2
R25	24753/395	RESISTOR-FIXED METAL-FILM 1K07 +/- 0.5% 250mW 200V 50 ppm/DEG.C, AXIAL, (LOOSE OR TAPED).	VISHAY COMPONENTS	EE.10-1K07-D-T-2
R26	24811/602	RESISTOR-FIXED METAL-FILM 10K +/- 0.1% 250mW 200V 15 ppm/DEG.C, SURFACE MOUNTED, SIZE MINI-MELF,	VISHAY COMPONENTS	SMM0204-10K0-0.1%-15
R27	24811/149	RESISTOR-FIXED METAL-FILM 100R +/- 1% 250mW 200V 50 ppm/DEG.C, SURFACE MOUNTED, SIZE MINI-MELF,	VISHAY COMPONENTS	SMM0204-100R-1%50ppm
R28 to R33	24811/173	RESISTOR-FIXED METAL-FILM 1K +/- 1% 250mW 200V 50 ppm/DEG.C, SURFACE MOUNTED, SIZE MINI-MELF, (8mm	VISHAY COMPONENTS	SMM0204-1K0-1%-50ppm
R34	24811/607	RESISTOR-FIXED METAL-FILM 20K +/- 0.1% 250mW 200V 15 ppm/DEG.C, SURFACE MOUNTED, SIZE MINI-MELF,	VISHAY COMPONENTS	SMM0204-20K0-0.1%-15
R35	24811/602	RESISTOR-FIXED METAL-FILM 10K +/- 0.1% 250mW 200V 15 ppm/DEG.C, SURFACE MOUNTED, SIZE MINI-MELF,	VISHAY COMPONENTS	SMM0204-10K0-0.1%-15
R36	24811/602	RESISTOR-FIXED METAL-FILM 10K +/- 0.1% 250mW 200V 15 ppm/DEG.C, SURFACE MOUNTED, SIZE MINI-MELF,	VISHAY COMPONENTS	SMM0204-10K0-0.1%-15
R37	24811/187	RESISTOR-FIXED METAL-FILM 3K92 +/- 1% 250mW 200V 50 ppm/DEG.C, SURFACE MOUNTED, SIZE MINI-MELF,	VISHAY COMPONENTS	SMM0204-3K92-1%50ppm
R38	24811/197	RESISTOR-FIXED METAL-FILM 10K +/- 1% 250mW 200V 50 ppm/DEG.C, SURFACE MOUNTED, SIZE MINI-MELF, (8mm	VISHAY COMPONENTS	SMM0204-10K-1%50ppm
R39	24811/197	RESISTOR-FIXED METAL-FILM 10K +/- 1% 250mW 200V 50 ppm/DEG.C, SURFACE MOUNTED, SIZE MINI-MELF, (8mm	VISHAY COMPONENTS	SMM0204-10K-1%50ppm
R40	24811/189	RESISTOR-FIXED METAL-FILM 4K75 +/- 1% 250mW 200V 50 ppm/DEG.C, SURFACE MOUNTED, SIZE MINI-MELF,	VISHAY COMPONENTS	SMM0204-4K75-1%50ppm
R41	24811/197	RESISTOR-FIXED METAL-FILM 10K +/- 1% 250mW 200V 50 ppm/DEG.C, SURFACE MOUNTED, SIZE MINI-MELF, (8mm	VISHAY COMPONENTS	SMM0204-10K-1%50ppm
R42	24753/624	RESISTOR-FIXED METAL-FILM 1K +/- 0.5% 250mW 200V 50 ppm/DEG.C, AXIAL, (TAPED).	VISHAY COMPONENTS	EE.10-1K0-D-T-2
R43	24753/360	RESISTOR-FIXED METAL-FILM 1K05 +/- 0.5% 250mW 200V 50 ppm/DEG.C, AXIAL, (TAPED).	VISHAY COMPONENTS	EE.10-1K05-D-T-2
R44 to R46	24811/602	RESISTOR-FIXED METAL-FILM 10K +/- 0.1% 250mW 200V 15 ppm/DEG.C, SURFACE MOUNTED, SIZE MINI-MELF,	VISHAY COMPONENTS	SMM0204-10K0-0.1%-15
R47	24811/195	RESISTOR-FIXED METAL-FILM 8K25 +/- 1% 250mW 200V 50 ppm/DEG.C, SURFACE MOUNTED, SIZE MINI-MELF,	VISHAY COMPONENTS	SMM0204-8K25-1%50ppm
R48	24753/673	RESISTOR-FIXED METAL-FILM 4K22 +/- 0.5% 250mW 200V 50 ppm/DEG.C, AXIAL, (LOOSE OR TAPED).	VISHAY COMPONENTS	EE.10-4K22-D-T-2
R49	24811/607	RESISTOR-FIXED METAL-FILM 20K +/- 0.1% 250mW 200V 15 ppm/DEG.C, SURFACE MOUNTED, SIZE MINI-MELF,	VISHAY COMPONENTS	SMM0204-20K0-0.1%-15
R50	24811/165	RESISTOR-FIXED METAL-FILM 475R +/- 1% 250mW 200V 50 ppm/DEG.C, SURFACE MOUNTED, SIZE MINI-MELF,	VISHAY COMPONENTS	SMM0204-475R-1%50ppm
R51	24811/153	RESISTOR-FIXED METAL-FILM 150R +/- 1% 250mW 200V 50 ppm/DEG.C, SURFACE MOUNTED, SIZE MINI-MELF,	VISHAY COMPONENTS	SMM0204-150R-1%50ppm
R52	24753/541	RESISTOR-FIXED METAL-FILM 75K +/- 0.5% 250mW 200V 50 ppm/DEG.C, AXIAL, (LOOSE OR TAPED).	VISHAY COMPONENTS	EE.10-75K-D-T-2
R54	24753/600	RESISTOR-FIXED METAL-FILM 12K4 +/- 0.5% 250mW 200V 50 ppm/DEG.C, AXIAL, (LOOSE OR TAPED).	VISHAY COMPONENTS	EE.10-12K4-D-T-2
R55	24753/627	RESISTOR-FIXED METAL-FILM 4K02 +/- 0.5% 250mW 200V 50 ppm/DEG.C, AXIAL, (LOOSE OR TAPED).	VISHAY COMPONENTS	EE.10-4K02-D-T-2
R56	24753/612	RESISTOR-FIXED METAL-FILM 5K11 +/- 0.5% 250mW 200V 50 ppm/DEG.C, AXIAL, (LOOSE OR TAPED).	VISHAY COMPONENTS	EE.10-5K11-D-T-2
R57	24811/181	RESISTOR-FIXED METAL-FILM 2K21 +/- 1% 250mW 200V 50 ppm/DEG.C, SURFACE MOUNTED, SIZE MINI-MELF,	VISHAY COMPONENTS	SMM0204-2K21-1%50ppm

Audio processor board B1/2 (contd.)

Cir. Ref.	MI part number	Description	Manufacturer	Manufacturer's part number
R58	24811/200	RESISTOR-FIXED METAL-FILM 13K +/- 1% 250mW 200V 50 ppm/DEG.C, SURFACE MOUNTED, SIZE MINI-MELF, (8mm	VISHAY COMPONENTS	SMM0204-13K-1%50ppm
R59	24811/198	RESISTOR-FIXED METAL-FILM 11K +/- 1% 250mW 200V 50 ppm/DEG.C, SURFACE MOUNTED, SIZE MINI-MELF, (8mm	VISHAY COMPONENTS	SMM0204-11K-1%50ppm
R60	24811/169	RESISTOR-FIXED METAL-FILM 681R +/- 1% 250mW 200V 50 ppm/DEG.C, SURFACE MOUNTED, SIZE MINI-MELF,	VISHAY COMPONENTS	SMM0204-681R-1%50ppm
R61	25748/566	RESISTOR-VARIABLE CERMET LINEAR, 10K 10% 500mW 200V 100 ppm/DEG.C, MULTI-TURN, VERTICAL-PCB,	MEGGITT ELECTRONICS	4290W404/8/06411/103
R62	24811/197	RESISTOR-FIXED METAL-FILM 10K +/- 1% 250mW 200V 50 ppm/DEG.C, SURFACE MOUNTED, SIZE MINI-MELF, (8mm	VISHAY COMPONENTS	SMM0204-10K-1%50ppm
R63	24811/197	RESISTOR-FIXED METAL-FILM 10K +/- 1% 250mW 200V 50 ppm/DEG.C, SURFACE MOUNTED, SIZE MINI-MELF, (8mm	VISHAY COMPONENTS	SMM0204-10K-1%50ppm
R64 to R66	24811/205	RESISTOR-FIXED METAL-FILM 22K1 +/- 1% 250mW 200V 50 ppm/DEG.C, SURFACE MOUNTED, SIZE MINI-MELF,	VISHAY COMPONENTS	SMM0204-22K1-1%50ppm
R67	24811/165	RESISTOR-FIXED METAL-FILM 475R +/- 1% 250mW 200V 50 ppm/DEG.C, SURFACE MOUNTED, SIZE MINI-MELF,	VISHAY COMPONENTS	SMM0204-475R-1%50ppm
R68	24811/165	RESISTOR-FIXED METAL-FILM 475R +/- 1% 250mW 200V 50 ppm/DEG.C, SURFACE MOUNTED, SIZE MINI-MELF,	VISHAY COMPONENTS	SMM0204-475R-1%50ppm
R69	24811/205	RESISTOR-FIXED METAL-FILM 22K1 +/- 1% 250mW 200V 50 ppm/DEG.C, SURFACE MOUNTED, SIZE MINI-MELF,	VISHAY COMPONENTS	SMM0204-22K1-1%50ppm
R70	24811/209	RESISTOR-FIXED METAL-FILM 33K2 +/- 1% 250mW 200V 50 ppm/DEG.C, SURFACE MOUNTED, SIZE MINI-MELF,	VISHAY COMPONENTS	SMM0204-33K2-1%50ppm
R71	24811/199	RESISTOR-FIXED METAL-FILM 12K1 +/- 1% 250mW 200V 50 ppm/DEG.C, SURFACE MOUNTED, SIZE MINI-MELF,	VISHAY COMPONENTS	SMM0204-12K1-1%50ppm
R72	24811/213	RESISTOR-FIXED METAL-FILM 47K5 +/- 1% 250mW 200V 50 ppm/DEG.C, SURFACE MOUNTED, SIZE MINI-MELF,	VISHAY COMPONENTS	SMM0204-47K5-1%50ppm
R73	24811/213	RESISTOR-FIXED METAL-FILM 47K5 +/- 1% 250mW 200V 50 ppm/DEG.C, SURFACE MOUNTED, SIZE MINI-MELF,	VISHAY COMPONENTS	SMM0204-47K5-1%50ppm
R74	24811/205	RESISTOR-FIXED METAL-FILM 22K1 +/- 1% 250mW 200V 50 ppm/DEG.C, SURFACE MOUNTED, SIZE MINI-MELF,	VISHAY COMPONENTS	SMM0204-22K1-1%50ppm
R77	24811/205	RESISTOR-FIXED METAL-FILM 22K1 +/- 1% 250mW 200V 50 ppm/DEG.C, SURFACE MOUNTED, SIZE MINI-MELF,	VISHAY COMPONENTS	SMM0204-22K1-1%50ppm
R78	24811/173	RESISTOR-FIXED METAL-FILM 1K +/- 1% 250mW 200V 50 ppm/DEG.C, SURFACE MOUNTED, SIZE MINI-MELF, (8mm	VISHAY COMPONENTS	SMM0204-1K0-1%-50ppm
R79	24811/245	RESISTOR-FIXED METAL-FILM 1M +/- 1% 250mW 200V 50 ppm/DEG.C, SURFACE MOUNTED, SIZE MINI-MELF, (8mm	VISHAY COMPONENTS	SMM0204-1M0-1%50ppm
R80	24811/221	RESISTOR-FIXED METAL-FILM 100K +/- 1% 250mW 200V 50 ppm/DEG.C, SURFACE MOUNTED, SIZE MINI-MELF,	VISHAY COMPONENTS	SMM0204-100K-1%50ppm
R81	24811/189	RESISTOR-FIXED METAL-FILM 4K75 +/- 1% 250mW 200V 50 ppm/DEG.C, SURFACE MOUNTED, SIZE MINI-MELF,	VISHAY COMPONENTS	SMM0204-4K75-1%50ppm
R82	24811/208	RESISTOR-FIXED METAL-FILM 30K1 +/- 1% 250mW 200V 50 ppm/DEG.C, SURFACE MOUNTED, SIZE MINI-MELF,	VISHAY COMPONENTS	SMM0204-30K1-1%50ppm
R83	25711/643	RESISTOR-VARIABLE CERMET LINEAR, 50K 10% 500mW 200V 150 ppm/DEG.C, SINGLE-TURN, HORIZONTAL-PCB,	VISHAY COMPONENTS	TYA-50K-10%
R90	25685/418	THERMISTOR POSITIVE-TC DISC, 7.4mm 2R67 @ 20 DEG.C, 400mW 5mm PWP, FAULT VOLTAGE 60V, TRIP	BOURNS ELECTRONICS	MF-R020
R91	25685/418	THERMISTOR POSITIVE-TC DISC, 7.4mm 2R67 @ 20 DEG.C, 400mW 5mm PWP, FAULT VOLTAGE 60V, TRIP	BOURNS ELECTRONICS	MF-R020
R92	24811/189	RESISTOR-FIXED METAL-FILM 4K75 +/- 1% 250mW 200V 50 ppm/DEG.C, SURFACE MOUNTED, SIZE MINI-MELF,	VISHAY COMPONENTS	SMM0204-4K75-1%50ppm
R93	24811/197	RESISTOR-FIXED METAL-FILM 10K +/- 1% 250mW 200V 50 ppm/DEG.C, SURFACE MOUNTED, SIZE MINI-MELF, (8mm	VISHAY COMPONENTS	SMM0204-10K-1%50ppm

Audio processor board B1/2 (contd.)

Cir. Ref.	MI part number	Description	Manufacturer	Manufacturer's part number
R94	24811/199	RESISTOR-FIXED METAL-FILM 12K1 +/- 1% 250mW 200V 50 ppm/DEG.C, SURFACE MOUNTED, SIZE MINI-MELF,	VISHAY COMPONENTS	SMM0204-12K1-1%50ppm
R95	24811/173	RESISTOR-FIXED METAL-FILM 1K +/- 1% 250mW 200V 50 ppm/DEG.C, SURFACE MOUNTED, SIZE MINI-MELF, (8mm	VISHAY COMPONENTS	SMM0204-1K0-1%-50ppm
R96	24811/197	RESISTOR-FIXED METAL-FILM 10K +/- 1% 250mW 200V 50 ppm/DEG.C, SURFACE MOUNTED, SIZE MINI-MELF, (8mm	VISHAY COMPONENTS	SMM0204-10K-1%50ppm
R97	24811/189	RESISTOR-FIXED METAL-FILM 4K75 +/- 1% 250mW 200V 50 ppm/DEG.C, SURFACE MOUNTED, SIZE MINI-MELF,	VISHAY COMPONENTS	SMM0204-4K75-1%50ppm
R98	24811/213	RESISTOR-FIXED METAL-FILM 47K5 +/- 1% 250mW 200V 50 ppm/DEG.C, SURFACE MOUNTED, SIZE MINI-MELF,	VISHAY COMPONENTS	SMM0204-47K5-1%50ppm
R100	24811/157	RESISTOR-FIXED METAL-FILM 221R +/- 1% 250mW 200V 50 ppm/DEG.C, SURFACE MOUNTED, SIZE MINI-MELF,	VISHAY COMPONENTS	SMM0204-221R-1%50ppm
R101	24811/157	RESISTOR-FIXED METAL-FILM 221R +/- 1% 250mW 200V 50 ppm/DEG.C, SURFACE MOUNTED, SIZE MINI-MELF,	VISHAY COMPONENTS	SMM0204-221R-1%50ppm
R102	24811/149	RESISTOR-FIXED METAL-FILM 100R +/- 1% 250mW 200V 50 ppm/DEG.C, SURFACE MOUNTED, SIZE MINI-MELF,	VISHAY COMPONENTS	SMM0204-100R-1%50ppm
R103	24811/181	RESISTOR-FIXED METAL-FILM 2K21 +/- 1% 250mW 200V 50 ppm/DEG.C, SURFACE MOUNTED, SIZE MINI-MELF,	VISHAY COMPONENTS	SMM0204-2K21-1%50ppm
R104	24811/173	RESISTOR-FIXED METAL-FILM 1K +/- 1% 250mW 200V 50 ppm/DEG.C, SURFACE MOUNTED, SIZE MINI-MELF, (8mm	VISHAY COMPONENTS	SMM0204-1K0-1%-50ppm
R105	24811/181	RESISTOR-FIXED METAL-FILM 2K21 +/- 1% 250mW 200V 50 ppm/DEG.C, SURFACE MOUNTED, SIZE MINI-MELF,	VISHAY COMPONENTS	SMM0204-2K21-1%50ppm
R106	24811/149	RESISTOR-FIXED METAL-FILM 100R +/- 1% 250mW 200V 50 ppm/DEG.C, SURFACE MOUNTED, SIZE MINI-MELF,	VISHAY COMPONENTS	SMM0204-100R-1%50ppm
R107	24811/173	RESISTOR-FIXED METAL-FILM 1K +/- 1% 250mW 200V 50 ppm/DEG.C, SURFACE MOUNTED, SIZE MINI-MELF, (8mm	VISHAY COMPONENTS	SMM0204-1K0-1%-50ppm
R108	24811/181	RESISTOR-FIXED METAL-FILM 2K21 +/- 1% 250mW 200V 50 ppm/DEG.C, SURFACE MOUNTED, SIZE MINI-MELF,	VISHAY COMPONENTS	SMM0204-2K21-1%50ppm
R109	24811/181	RESISTOR-FIXED METAL-FILM 2K21 +/- 1% 250mW 200V 50 ppm/DEG.C, SURFACE MOUNTED, SIZE MINI-MELF,	VISHAY COMPONENTS	SMM0204-2K21-1%50ppm
R110	24811/189	RESISTOR-FIXED METAL-FILM 4K75 +/- 1% 250mW 200V 50 ppm/DEG.C, SURFACE MOUNTED, SIZE MINI-MELF,	VISHAY COMPONENTS	SMM0204-4K75-1%50ppm
R111	24811/173	RESISTOR-FIXED METAL-FILM 1K +/- 1% 250mW 200V 50 ppm/DEG.C, SURFACE MOUNTED, SIZE MINI-MELF, (8mm	VISHAY COMPONENTS	SMM0204-1K0-1%-50ppm
R112 to R114	24811/189	RESISTOR-FIXED METAL-FILM 4K75 +/- 1% 250mW 200V 50 ppm/DEG.C, SURFACE MOUNTED, SIZE MINI-MELF,	VISHAY COMPONENTS	SMM0204-4K75-1%50ppm
R115	24811/173	RESISTOR-FIXED METAL-FILM 1K +/- 1% 250mW 200V 50 ppm/DEG.C, SURFACE MOUNTED, SIZE MINI-MELF, (8mm	VISHAY COMPONENTS	SMM0204-1K0-1%-50ppm
R116 to R119	24811/189	RESISTOR-FIXED METAL-FILM 4K75 +/- 1% 250mW 200V 50 ppm/DEG.C, SURFACE MOUNTED, SIZE MINI-MELF,	VISHAY COMPONENTS	SMM0204-4K75-1%50ppm
R120	24811/125	RESISTOR-FIXED METAL-FILM 10R +/- 1% 250mW 200V 50 ppm/DEG.C, SURFACE MOUNTED, SIZE MINI-MELF, (8mm	VISHAY COMPONENTS	SMM0204-10R-1%-50ppm
R121	24811/173	RESISTOR-FIXED METAL-FILM 1K +/- 1% 250mW 200V 50 ppm/DEG.C, SURFACE MOUNTED, SIZE MINI-MELF, (8mm	VISHAY COMPONENTS	SMM0204-1K0-1%-50ppm
R122	24811/141	RESISTOR-FIXED METAL-FILM 47R5 +/- 1% 250mW 200V 50 ppm/DEG.C, SURFACE MOUNTED, SIZE MINI-MELF,	VISHAY COMPONENTS	SMM0204-47R5-1%50ppm
R123	24811/173	RESISTOR-FIXED METAL-FILM 1K +/- 1% 250mW 200V 50 ppm/DEG.C, SURFACE MOUNTED, SIZE MINI-MELF, (8mm	VISHAY COMPONENTS	SMM0204-1K0-1%-50ppm
R124	24811/125	RESISTOR-FIXED METAL-FILM 10R +/- 1% 250mW 200V 50 ppm/DEG.C, SURFACE MOUNTED, SIZE MINI-MELF, (8mm	VISHAY COMPONENTS	SMM0204-10R-1%-50ppm
R125	24811/161	RESISTOR-FIXED METAL-FILM 332R +/- 1% 250mW 200V 50 ppm/DEG.C, SURFACE MOUNTED, SIZE MINI-MELF,	VISHAY COMPONENTS	SMM0204-332R-1%50ppm

Audio processor board B1/2 (contd.)

Cir. Ref.	MI part number	Description	Manufacturer	Manufacturer's part number
R126	24811/161	RESISTOR-FIXED METAL-FILM 332R +/- 1% 250mW 200V 50 ppm/DEG.C, SURFACE MOUNTED, SIZE MINI-MELF,	VISHAY COMPONENTS	SMM0204-332R-1%50ppm
R127	24811/186	RESISTOR-FIXED METAL-FILM 3K65 +/- 1% 250mW 200V 50 ppm/DEG.C, SURFACE MOUNTED, SIZE MINI-MELF,	VISHAY COMPONENTS	SMM0204-3K65-1%50ppm
R128	24811/186	RESISTOR-FIXED METAL-FILM 3K65 +/- 1% 250mW 200V 50 ppm/DEG.C, SURFACE MOUNTED, SIZE MINI-MELF,	VISHAY COMPONENTS	SMM0204-3K65-1%50ppm
R129	24811/169	RESISTOR-FIXED METAL-FILM 681R +/- 1% 250mW 200V 50 ppm/DEG.C, SURFACE MOUNTED, SIZE MINI-MELF,	VISHAY COMPONENTS	SMM0204-681R-1%50ppm
R130	24811/169	RESISTOR-FIXED METAL-FILM 681R +/- 1% 250mW 200V 50 ppm/DEG.C, SURFACE MOUNTED, SIZE MINI-MELF,	VISHAY COMPONENTS	SMM0204-681R-1%50ppm
R131	24811/165	RESISTOR-FIXED METAL-FILM 475R +/- 1% 250mW 200V 50 ppm/DEG.C, SURFACE MOUNTED, SIZE MINI-MELF,	VISHAY COMPONENTS	SMM0204-475R-1%50ppm
R132	24811/186	RESISTOR-FIXED METAL-FILM 3K65 +/- 1% 250mW 200V 50 ppm/DEG.C, SURFACE MOUNTED, SIZE MINI-MELF,	VISHAY COMPONENTS	SMM0204-3K65-1%50ppm
R133	24811/173	RESISTOR-FIXED METAL-FILM 1K +/- 1% 250mW 200V 50 ppm/DEG.C, SURFACE MOUNTED, SIZE MINI-MELF, (8mm	VISHAY COMPONENTS	SMM0204-1K0-1%-50ppm
R134	24811/173	RESISTOR-FIXED METAL-FILM 1K +/- 1% 250mW 200V 50 ppm/DEG.C, SURFACE MOUNTED, SIZE MINI-MELF, (8mm	VISHAY COMPONENTS	SMM0204-1K0-1%-50ppm
R135	24811/153	RESISTOR-FIXED METAL-FILM 150R +/- 1% 250mW 200V 50 ppm/DEG.C, SURFACE MOUNTED, SIZE MINI-MELF,	VISHAY COMPONENTS	SMM0204-150R-1%50ppm
R136	24811/153	RESISTOR-FIXED METAL-FILM 150R +/- 1% 250mW 200V 50 ppm/DEG.C, SURFACE MOUNTED, SIZE MINI-MELF,	VISHAY COMPONENTS	SMM0204-150R-1%50ppm
R137	24811/149	RESISTOR-FIXED METAL-FILM 100R +/- 1% 250mW 200V 50 ppm/DEG.C, SURFACE MOUNTED, SIZE MINI-MELF,	VISHAY COMPONENTS	SMM0204-100R-1%50ppm
R138	24811/197	RESISTOR-FIXED METAL-FILM 10K +/- 1% 250mW 200V 50 ppm/DEG.C, SURFACE MOUNTED, SIZE MINI-MELF, (8mm	VISHAY COMPONENTS	SMM0204-10K-1%50ppm
R139	24811/227	RESISTOR-FIXED METAL-FILM 182K +/- 1% 250mW 200V 50 ppm/DEG.C, SURFACE MOUNTED, SIZE MINI-MELF,	VISHAY COMPONENTS	SMM0204-182K-1%50ppm
R140	24811/214	RESISTOR-FIXED METAL-FILM 51K1 +/- 1% 250mW 200V 50 ppm/DEG.C, SURFACE MOUNTED, SIZE MINI-MELF,	VISHAY COMPONENTS	SMM0204-51K1-1%50ppm
R141	24811/214	RESISTOR-FIXED METAL-FILM 51K1 +/- 1% 250mW 200V 50 ppm/DEG.C, SURFACE MOUNTED, SIZE MINI-MELF,	VISHAY COMPONENTS	SMM0204-51K1-1%50ppm
R142	24811/227	RESISTOR-FIXED METAL-FILM 182K +/- 1% 250mW 200V 50 ppm/DEG.C, SURFACE MOUNTED, SIZE MINI-MELF,	VISHAY COMPONENTS	SMM0204-182K-1%50ppm
R143	25748/564	RESISTOR-VARIABLE CERMET LINEAR, 500R 10% 500mW 200V 100 ppm/DEG.C, MULTI-TURN, VERTICAL-PCB,	MEGGITT ELECTRONICS	4290W404/8/06411/501
R144	24811/181	RESISTOR-FIXED METAL-FILM 2K21 +/- 1% 250mW 200V 50 ppm/DEG.C, SURFACE MOUNTED, SIZE MINI-MELF,	VISHAY COMPONENTS	SMM0204-2K21-1%50ppm
R145	24811/221	RESISTOR-FIXED METAL-FILM 100K +/- 1% 250mW 200V 50 ppm/DEG.C, SURFACE MOUNTED, SIZE MINI-MELF,	VISHAY COMPONENTS	SMM0204-100K-1%50ppm
R146	24811/221	RESISTOR-FIXED METAL-FILM 100K +/- 1% 250mW 200V 50 ppm/DEG.C, SURFACE MOUNTED, SIZE MINI-MELF,	VISHAY COMPONENTS	SMM0204-100K-1%50ppm
R147	24811/238	RESISTOR-FIXED METAL-FILM 511K +/- 1% 250mW 200V 50 ppm/DEG.C, SURFACE MOUNTED, SIZE MINI-MELF,	VISHAY COMPONENTS	SMM0204-511K-1%50ppm
R148	24811/169	RESISTOR-FIXED METAL-FILM 681R +/- 1% 250mW 200V 50 ppm/DEG.C, SURFACE MOUNTED, SIZE MINI-MELF,	VISHAY COMPONENTS	SMM0204-681R-1%50ppm
R149	24811/231	RESISTOR-FIXED METAL-FILM 274K +/- 1% 250mW 200V 50 ppm/DEG.C, SURFACE MOUNTED, SIZE MINI-MELF,	VISHAY COMPONENTS	SMM0204-274K-1%50ppm
R150	24811/221	RESISTOR-FIXED METAL-FILM 100K +/- 1% 250mW 200V 50 ppm/DEG.C, SURFACE MOUNTED, SIZE MINI-MELF,	VISHAY COMPONENTS	SMM0204-100K-1%50ppm
R151	24811/173	RESISTOR-FIXED METAL-FILM 1K +/- 1% 250mW 200V 50 ppm/DEG.C, SURFACE MOUNTED, SIZE MINI-MELF, (8mm	VISHAY COMPONENTS	SMM0204-1K0-1%-50ppm

Audio processor board B1/2 (contd.)

Cir Ref.	MI part number	Description	Manufacturer	Manufacturer's part number
R152	24811/125	RESISTOR-FIXED METAL-FILM 10R +/- 1% 250mW 200V 50 ppm/DEG.C, SURFACE MOUNTED, SIZE MINI-MELF, (8mm	VISHAY COMPONENTS	SMM0204-10R-1%-50ppm
R153	24811/161	RESISTOR-FIXED METAL-FILM 332R +/- 1% 250mW 200V 50 ppm/DEG.C, SURFACE MOUNTED, SIZE MINI-MELF,	VISHAY COMPONENTS	SMM0204-332R-1%50ppm
R154	24811/190	RESISTOR-FIXED METAL-FILM 5K11 +/- 1% 250mW 200V 50 ppm/DEG.C, SURFACE MOUNTED, SIZE MINI-MELF,	VISHAY COMPONENTS	SMM0204-5K11-1%50ppm
R155	24811/186	RESISTOR-FIXED METAL-FILM 3K65 +/- 1% 250mW 200V 50 ppm/DEG.C, SURFACE MOUNTED, SIZE MINI-MELF,	VISHAY COMPONENTS	SMM0204-3K65-1%50ppm
R156	24811/197	RESISTOR-FIXED METAL-FILM 10K +/- 1% 250mW 200V 50 ppm/DEG.C, SURFACE MOUNTED, SIZE MINI-MELF, (8mm	VISHAY COMPONENTS	SMM0204-10K-1%50ppm
R157	24811/235	RESISTOR-FIXED METAL-FILM 392K +/- 1% 250mW 200V 50 ppm/DEG.C, SURFACE MOUNTED, SIZE MINI-MELF,	VISHAY COMPONENTS	SMM0204-392K-1%50ppm
R158 to R160	24811/125	RESISTOR-FIXED METAL-FILM 10R +/- 1% 250mW 200V 50 ppm/DEG.C, SURFACE MOUNTED, SIZE MINI-MELF, (8mm	VISHAY COMPONENTS	SMM0204-10R-1%-50ppm
R161	24811/221	RESISTOR-FIXED METAL-FILM 100K +/- 1% 250mW 200V 50 ppm/DEG.C, SURFACE MOUNTED, SIZE MINI-MELF,	VISHAY COMPONENTS	SMM0204-100K-1%50ppm
R162	24811/221	RESISTOR-FIXED METAL-FILM 100K +/- 1% 250mW 200V 50 ppm/DEG.C, SURFACE MOUNTED, SIZE MINI-MELF,	VISHAY COMPONENTS	SMM0204-100K-1%50ppm
R163 to R165	24811/173	RESISTOR-FIXED METAL-FILM 1K +/- 1% 250mW 200V 50 ppm/DEG.C, SURFACE MOUNTED, SIZE MINI-MELF, (8mm	VISHAY COMPONENTS	SMM0204-1K0-1%-50ppm
R166	24811/133	RESISTOR-FIXED METAL-FILM 22R1 +/- 1% 250mW 200V 50 ppm/DEG.C, SURFACE MOUNTED, SIZE MINI-MELF,	VISHAY COMPONENTS	SMM0204-22R1-1%50ppm
R167	24811/221	RESISTOR-FIXED METAL-FILM 100K +/- 1% 250mW 200V 50 ppm/DEG.C, SURFACE MOUNTED, SIZE MINI-MELF,	VISHAY COMPONENTS	SMM0204-100K-1%50ppm
R168	24811/218	RESISTOR-FIXED METAL-FILM 75K +/- 1% 250mW 200V 50 ppm/DEG.C, SURFACE MOUNTED, SIZE MINI-MELF, (8mm	VISHAY COMPONENTS	SMM0204-75K-1%50ppm
R169	24811/188	RESISTOR-FIXED METAL-FILM 4K32 +/- 1% 250mW 200V 50 ppm/DEG.C, SURFACE MOUNTED, SIZE MINI-MELF,	VISHAY COMPONENTS	SMM0204-4K32-1%50ppm
R170	24811/188	RESISTOR-FIXED METAL-FILM 4K32 +/- 1% 250mW 200V 50 ppm/DEG.C, SURFACE MOUNTED, SIZE MINI-MELF,	VISHAY COMPONENTS	SMM0204-4K32-1%50ppm
R171	24811/173	RESISTOR-FIXED METAL-FILM 1K +/- 1% 250mW 200V 50 ppm/DEG.C, SURFACE MOUNTED, SIZE MINI-MELF, (8mm	VISHAY COMPONENTS	SMM0204-1K0-1%-50ppm
R172	24811/170	RESISTOR-FIXED METAL-FILM 750R +/- 1% 250mW 200V 50 ppm/DEG.C, SURFACE MOUNTED, SIZE MINI-MELF,	VISHAY COMPONENTS	SMM0204-750R-1%50ppm
R173	24811/173	RESISTOR-FIXED METAL-FILM 1K +/- 1% 250mW 200V 50 ppm/DEG.C, SURFACE MOUNTED, SIZE MINI-MELF, (8mm	VISHAY COMPONENTS	SMM0204-1K0-1%-50ppm
R174	24811/170	RESISTOR-FIXED METAL-FILM 750R +/- 1% 250mW 200V 50 ppm/DEG.C, SURFACE MOUNTED, SIZE MINI-MELF,	VISHAY COMPONENTS	SMM0204-750R-1%50ppm
R175	24811/253	RESISTOR-FIXED METAL-FILM 2M21 +/- 1% 250mW 200V 50 ppm/DEG.C, SURFACE MOUNTED, SIZE MINI-MELF,	VISHAY COMPONENTS	SMM0204-2M21-1%50ppm
R176	24811/125	RESISTOR-FIXED METAL-FILM 10R +/- 1% 250mW 200V 50 ppm/DEG.C, SURFACE MOUNTED, SIZE MINI-MELF, (8mm	VISHAY COMPONENTS	SMM0204-10R-1%-50ppm
R177	24811/133	RESISTOR-FIXED METAL-FILM 22R1 +/- 1% 250mW 200V 50 ppm/DEG.C, SURFACE MOUNTED, SIZE MINI-MELF,	VISHAY COMPONENTS	SMM0204-22R1-1%50ppm
R178	24811/133	RESISTOR-FIXED METAL-FILM 22R1 +/- 1% 250mW 200V 50 ppm/DEG.C, SURFACE MOUNTED, SIZE MINI-MELF,	VISHAY COMPONENTS	SMM0204-22R1-1%50ppm
R179	24811/185	RESISTOR-FIXED METAL-FILM 3K32 +/- 1% 250mW 200V 50 ppm/DEG.C, SURFACE MOUNTED, SIZE MINI-MELF,	VISHAY COMPONENTS	SMM0204-3K32-1%50ppm
R180	24811/189	RESISTOR-FIXED METAL-FILM 4K75 +/- 1% 250mW 200V 50 ppm/DEG.C, SURFACE MOUNTED, SIZE MINI-MELF,	VISHAY COMPONENTS	SMM0204-4K75-1%50ppm
R181	25711/638	RESISTOR-VARIABLE CERMET LINEAR, 1K 10% 500mW 200V 150 ppm/DEG.C, SINGLE-TURN, HORIZONTAL-PCB,	VISHAY COMPONENTS	TYA-1K-10%

Audio processor board B1/2 (contd.)

Cir. Ref.	MI part number	Description	Manufacturer	Manufacturer's part number
R182	24811/179	RESISTOR-FIXED METAL-FILM 1K82 +/- 1% 250mW 200V 50 ppm/DEG.C, SURFACE MOUNTED, SIZE MINI-MELF,	VISHAY COMPONENTS	SMM0204-1K82-1%50ppm
R183	24753/541	RESISTOR-FIXED METAL-FILM 75K +/- 0.5% 250mW 200V 50 ppm/DEG.C, AXIAL, (LOOSE OR TAPED).	VISHAY COMPONENTS	EE.10-75K-D-T-2
R184	24811/194	RESISTOR-FIXED METAL-FILM 7K5 +/- 1% 250mW 200V 50 ppm/DEG.C, SURFACE MOUNTED, SIZE MINI-MELF, (8mm	VISHAY COMPONENTS	SMM0204-7K5-1%50ppm
R185	24811/184	RESISTOR-FIXED METAL-FILM 3K01 +/- 1% 250mW 200V 50 ppm/DEG.C, SURFACE MOUNTED, SIZE MINI-MELF,	VISHAY COMPONENTS	SMM0204-3K01-1%50ppm
R186	24811/184	RESISTOR-FIXED METAL-FILM 3K01 +/- 1% 250mW 200V 50 ppm/DEG.C, SURFACE MOUNTED, SIZE MINI-MELF,	VISHAY COMPONENTS	SMM0204-3K01-1%50ppm
R187	24753/582	RESISTOR-FIXED METAL-FILM 54K6 +/- 0.5% 250mW 200V 50 ppm/DEG.C, AXIAL, (LOOSE OR TAPED).	VISHAY COMPONENTS	EE.10-54K6-D-T-2
R188	24753/630	RESISTOR-FIXED METAL-FILM 14K3 +/- 0.5% 250mW 200V 50 ppm/DEG.C, AXIAL, (LOOSE OR TAPED).	VISHAY COMPONENTS	EE.10-14K3-D-T-2
R189	24811/225	RESISTOR-FIXED METAL-FILM 150K +/- 1% 250mW 200V 50 ppm/DEG.C, SURFACE MOUNTED, SIZE MINI-MELF,	VISHAY COMPONENTS	SMM0204-150K-1%50ppm
R190	24811/197	RESISTOR-FIXED METAL-FILM 10K +/- 1% 250mW 200V 50 ppm/DEG.C, SURFACE MOUNTED, SIZE MINI-MELF, (8mm	VISHAY COMPONENTS	SMM0204-10K-1%50ppm
R191	24811/200	RESISTOR-FIXED METAL-FILM 13K +/- 1% 250mW 200V 50 ppm/DEG.C, SURFACE MOUNTED, SIZE MINI-MELF, (8mm	VISHAY COMPONENTS	SMM0204-13K-1%50ppm
R192	24811/157	RESISTOR-FIXED METAL-FILM 221R +/- 1% 250mW 200V 50 ppm/DEG.C, SURFACE MOUNTED, SIZE MINI-MELF,	VISHAY COMPONENTS	SMM0204-221R-1%50ppm
R193	24811/185	RESISTOR-FIXED METAL-FILM 3K32 +/- 1% 250mW 200V 50 ppm/DEG.C, SURFACE MOUNTED, SIZE MINI-MELF,	VISHAY COMPONENTS	SMM0204-3K32-1%50ppm
R194	24811/253	RESISTOR-FIXED METAL-FILM 2M21 +/- 1% 250mW 200V 50 ppm/DEG.C, SURFACE MOUNTED, SIZE MINI-MELF,	VISHAY COMPONENTS	SMM0204-2M21-1%50ppm
R195	24811/245	RESISTOR-FIXED METAL-FILM 1M +/- 1% 250mW 200V 50 ppm/DEG.C, SURFACE MOUNTED, SIZE MINI-MELF, (8mm	VISHAY COMPONENTS	SMM0204-1M0-1%50ppm
R196	24811/197	RESISTOR-FIXED METAL-FILM 10K +/- 1% 250mW 200V 50 ppm/DEG.C, SURFACE MOUNTED, SIZE MINI-MELF, (8mm	VISHAY COMPONENTS	SMM0204-10K-1%50ppm
R197	24811/181	RESISTOR-FIXED METAL-FILM 2K21 +/- 1% 250mW 200V 50 ppm/DEG.C, SURFACE MOUNTED, SIZE MINI-MELF,	VISHAY COMPONENTS	SMM0204-2K21-1%50ppm
R198	24811/157	RESISTOR-FIXED METAL-FILM 221R +/- 1% 250mW 200V 50 ppm/DEG.C, SURFACE MOUNTED, SIZE MINI-MELF,	VISHAY COMPONENTS	SMM0204-221R-1%50ppm
R199	24811/217	RESISTOR-FIXED METAL-FILM 68K1 +/- 1% 250mW 200V 50 ppm/DEG.C, SURFACE MOUNTED, SIZE MINI-MELF,	VISHAY COMPONENTS	SMM0204-68K1-1%50ppm
R200	24811/245	RESISTOR-FIXED METAL-FILM 1M +/- 1% 250mW 200V 50 ppm/DEG.C, SURFACE MOUNTED, SIZE MINI-MELF, (8mm	VISHAY COMPONENTS	SMM0204-1M0-1%50ppm
R201	24811/185	RESISTOR-FIXED METAL-FILM 3K32 +/- 1% 250mW 200V 50 ppm/DEG.C, SURFACE MOUNTED, SIZE MINI-MELF,	VISHAY COMPONENTS	SMM0204-3K32-1%50ppm
R202	24811/233	RESISTOR-FIXED METAL-FILM 332K +/- 1% 250mW 200V 50 ppm/DEG.C, SURFACE MOUNTED, SIZE MINI-MELF,	VISHAY COMPONENTS	SMM0204-332K-1%50ppm
R203	24753/231	RESISTOR-FIXED METAL-FILM 55K6 +/- 0.5% 250mW 200V 50 ppm/DEG.C, AXIAL, (TAPED).	VISHAY COMPONENTS	EE.10-55K6-D-T-2
R204	24753/363	RESISTOR-FIXED METAL-FILM 499K +/- 0.5% 250mW 200V 50 ppm/DEG.C, AXIAL, (LOOSE OR TAPED).	VISHAY COMPONENTS	EE.10-499K-D-T-2
R205	25711/644	RESISTOR-VARIABLE CERMET LINEAR, 100K 10% 500mW 200V 150 ppm/DEG.C, SINGLE-TURN, HORIZONTAL-PCB,	VISHAY COMPONENTS	TYA-100K-10%
R206	24811/125	RESISTOR-FIXED METAL-FILM 10R +/- 1% 250mW 200V 50 ppm/DEG.C, SURFACE MOUNTED, SIZE MINI-MELF, (8mm	VISHAY COMPONENTS	SMM0204-10R-1%-50ppm
R207	24811/125	RESISTOR-FIXED METAL-FILM 10R +/- 1% 250mW 200V 50 ppm/DEG.C, SURFACE MOUNTED, SIZE MINI-MELF, (8mm	VISHAY COMPONENTS	SMM0204-10R-1%-50ppm

Audio processor board B1/2 (contd.)

Cir. Ref.	MI part number	Description	Manufacturer	Manufacturer's part number
R208	24811/199	RESISTOR-FIXED METAL-FILM 12K1 +/- 1% 250mW 200V 50 ppm/DEG.C, SURFACE MOUNTED, SIZE MINI-MELF,	VISHAY COMPONENTS	SMM0204-12K1-1%50ppm
R209	24811/212	RESISTOR-FIXED METAL-FILM 43K2 +/- 1% 250mW 200V 50 ppm/DEG.C, SURFACE MOUNTED, SIZE MINI-MELF,	VISHAY COMPONENTS	SMM0204-43K2-1%50ppm
R210	25711/642	RESISTOR-VARIABLE CERMET LINEAR, 20K 10% 500mW 200V 150 ppm/DEG.C, SINGLE-TURN, HORIZONTAL-PCB,	VISHAY COMPONENTS	TYA-20K-10%
R211	25711/644	RESISTOR-VARIABLE CERMET LINEAR, 100K 10% 500mW 200V 150 ppm/DEG.C, SINGLE-TURN, HORIZONTAL-PCB,	VISHAY COMPONENTS	TYA-100K-10%
R212	24753/640	RESISTOR-FIXED METAL-FILM 4K32 +/- 0.5% 250mW 200V 50 ppm/DEG.C, AXIAL, (LOOSE OR TAPED).	VISHAY COMPONENTS	EE.10-4K32-D-T-2
R213	24811/644	RESISTOR-FIXED METAL-FILM 39K2 +/- 0.1% 250mW 200V 15 ppm/DEG.C, SURFACE MOUNTED, SIZE MINI-MELF,	VISHAY COMPONENTS	SMM0204-39K2-0.1%-15
R214	24811/203	RESISTOR-FIXED METAL-FILM 18K2 +/- 1% 250mW 200V 50 ppm/DEG.C, SURFACE MOUNTED, SIZE MINI-MELF,	VISHAY COMPONENTS	SMM0204-18K2-1%50ppm
R215	24811/623	RESISTOR-FIXED METAL-FILM 12K1 +/- 0.1% 250mW 200V 15 ppm/DEG.C, SURFACE MOUNTED, SIZE MINI-MELF,	VISHAY COMPONENTS	SMM0204-12K1-0.1%-15
R216	24811/173	RESISTOR-FIXED METAL-FILM 1K +/- 1% 250mW 200V 50 ppm/DEG.C, SURFACE MOUNTED, SIZE MINI-MELF, (8mm	VISHAY COMPONENTS	SMM0204-1K0-1%-50ppm
R217	24811/206	RESISTOR-FIXED METAL-FILM 24K3 +/- 1% 250mW 200V 50 ppm/DEG.C, SURFACE MOUNTED, SIZE MINI-MELF,	VISHAY COMPONENTS	SMM0204-24K3-1%50ppm
R218	24811/206	RESISTOR-FIXED METAL-FILM 24K3 +/- 1% 250mW 200V 50 ppm/DEG.C, SURFACE MOUNTED, SIZE MINI-MELF,	VISHAY COMPONENTS	SMM0204-24K3-1%50ppm
R219	24753/364	RESISTOR-FIXED METAL-FILM 4K99 +/- 0.5% 250mW 200V 50 ppm/DEG.C, AXIAL, (LOOSE OR TAPED).	VISHAY COMPONENTS	EE.10-4K99-D-T-2
R220	24753/475	RESISTOR-FIXED METAL-FILM 3K +/- 0.5% 250mW 200V 50 ppm/DEG.C, AXIAL, (LOOSE OR TAPED).	VISHAY COMPONENTS	EE.10-3K0-D-T-2
R221	24753/624	RESISTOR-FIXED METAL-FILM 1K +/- 0.5% 250mW 200V 50 ppm/DEG.C, AXIAL, (TAPED).	VISHAY COMPONENTS	EE.10-1K0-D-T-2
R222	24753/624	RESISTOR-FIXED METAL-FILM 1K +/- 0.5% 250mW 200V 50 ppm/DEG.C, AXIAL, (TAPED).	VISHAY COMPONENTS	EE.10-1K0-D-T-2
R223	24811/204	RESISTOR-FIXED METAL-FILM 20K +/- 1% 250mW 200V 50 ppm/DEG.C, SURFACE MOUNTED, SIZE MINI-MELF, (8mm	VISHAY COMPONENTS	SMM0204-20K-1%50ppm
R224	24811/221	RESISTOR-FIXED METAL-FILM 100K +/- 1% 250mW 200V 50 ppm/DEG.C, SURFACE MOUNTED, SIZE MINI-MELF,	VISHAY COMPONENTS	SMM0204-100K-1%50ppm
R225	24811/197	RESISTOR-FIXED METAL-FILM 10K +/- 1% 250mW 200V 50 ppm/DEG.C, SURFACE MOUNTED, SIZE MINI-MELF, (8mm	VISHAY COMPONENTS	SMM0204-10K-1%50ppm
R226	24811/191	RESISTOR-FIXED METAL-FILM 5K62 +/- 1% 250mW 200V 50 ppm/DEG.C, SURFACE MOUNTED, SIZE MINI-MELF,	VISHAY COMPONENTS	SMM0204-5K62-1%50ppm
R227	24811/207	RESISTOR-FIXED METAL-FILM 27K4 +/- 1% 250mW 200V 50 ppm/DEG.C, SURFACE MOUNTED, SIZE MINI-MELF,	VISHAY COMPONENTS	SMM0204-27K4-1%50ppm
R228	24811/224	RESISTOR-FIXED METAL-FILM 130K +/- 1% 250mW 200V 50 ppm/DEG.C, SURFACE MOUNTED, SIZE MINI-MELF,	VISHAY COMPONENTS	SMM0204-130K-1%50ppm
R229	24811/201	RESISTOR-FIXED METAL-FILM 15K +/- 1% 250mW 200V 50 ppm/DEG.C, SURFACE MOUNTED, SIZE MINI-MELF, (8mm	VISHAY COMPONENTS	SMM0204-15K-1%50ppm
R230	24811/179	RESISTOR-FIXED METAL-FILM 1K82 +/- 1% 250mW 200V 50 ppm/DEG.C, SURFACE MOUNTED, SIZE MINI-MELF,	VISHAY COMPONENTS	SMM0204-1K82-1%50ppm
R231	24811/195	RESISTOR-FIXED METAL-FILM 8K25 +/- 1% 250mW 200V 50 ppm/DEG.C, SURFACE MOUNTED, SIZE MINI-MELF,	VISHAY COMPONENTS	SMM0204-8K25-1%50ppm
R232	25711/644	RESISTOR-VARIABLE CERMET LINEAR, 100K 10% 500mW 200V 150 ppm/DEG.C, SINGLE-TURN, HORIZONTAL-PCB,	VISHAY COMPONENTS	TYA-100K-10%
R233	24753/640	RESISTOR-FIXED METAL-FILM 4K32 +/- 0.5% 250mW 200V 50 ppm/DEG.C, AXIAL, (LOOSE OR TAPED).	VISHAY COMPONENTS	EE.10-4K32-D-T-2

Cir. Ref.	MI part number	Description	Manufacturer	Manufacturer's part number
Audio processor board B1/2 (contd.)				
R234	24811/644	RESISTOR-FIXED METAL-FILM 39K2 +/- 0.1% 250mW 200V 15 ppm/DEG.C, SURFACE MOUNTED, SIZE MINI-MELF,	VISHAY COMPONENTS	SMM0204-39K2-0.1%-15
R235	24811/193	RESISTOR-FIXED METAL-FILM 6K81 +/- 1% 250mW 200V 50 ppm/DEG.C, SURFACE MOUNTED, SIZE MINI-MELF,	VISHAY COMPONENTS	SMM0204-6K81-1%50ppm
R236	24811/197	RESISTOR-FIXED METAL-FILM 10K +/- 1% 250mW 200V 50 ppm/DEG.C, SURFACE MOUNTED, SIZE MINI-MELF, (8mm	VISHAY COMPONENTS	SMM0204-10K-1%50ppm
R237	24811/195	RESISTOR-FIXED METAL-FILM 8K25 +/- 1% 250mW 200V 50 ppm/DEG.C, SURFACE MOUNTED, SIZE MINI-MELF,	VISHAY COMPONENTS	SMM0204-8K25-1%50ppm
R238	25711/638	RESISTOR-VARIABLE CERMET LINEAR, 1K 10% 500mW 200V 150 ppm/DEG.C, SINGLE-TURN, HORIZONTAL-PCB,	VISHAY COMPONENTS	TYA-1K-10%
R239	24811/245	RESISTOR-FIXED METAL-FILM 1M +/- 1% 250mW 200V 50 ppm/DEG.C, SURFACE MOUNTED, SIZE MINI-MELF, (8mm	VISHAY COMPONENTS	SMM0204-1M0-1%50ppm
R240	24811/602	RESISTOR-FIXED METAL-FILM 10K +/- 0.1% 250mW 200V 15 ppm/DEG.C, SURFACE MOUNTED, SIZE MINI-MELF,	VISHAY COMPONENTS	SMM0204-10K0-0.1%-15
R241	24811/602	RESISTOR-FIXED METAL-FILM 10K +/- 0.1% 250mW 200V 15 ppm/DEG.C, SURFACE MOUNTED, SIZE MINI-MELF,	VISHAY COMPONENTS	SMM0204-10K0-0.1%-15
R242	24811/206	RESISTOR-FIXED METAL-FILM 24K3 +/- 1% 250mW 200V 50 ppm/DEG.C, SURFACE MOUNTED, SIZE MINI-MELF,	VISHAY COMPONENTS	SMM0204-24K3-1%50ppm
R243	24811/202	RESISTOR-FIXED METAL-FILM 16K2 +/- 1% 250mW 200V 50 ppm/DEG.C, SURFACE MOUNTED, SIZE MINI-MELF,	VISHAY COMPONENTS	SMM0204-16K2-1%50ppm
R244	24811/607	RESISTOR-FIXED METAL-FILM 20K +/- 0.1% 250mW 200V 15 ppm/DEG.C, SURFACE MOUNTED, SIZE MINI-MELF,	VISHAY COMPONENTS	SMM0204-20K0-0.1%-15
R245 to R249	24811/189	RESISTOR-FIXED METAL-FILM 4K75 +/- 1% 250mW 200V 50 ppm/DEG.C, SURFACE MOUNTED, SIZE MINI-MELF,	VISHAY COMPONENTS	SMM0204-4K75-1%50ppm
R250	24811/211	RESISTOR-FIXED METAL-FILM 39K2 +/- 1% 250mW 200V 50 ppm/DEG.C, SURFACE MOUNTED, SIZE MINI-MELF,	VISHAY COMPONENTS	SMM0204-39K2-1%50ppm
R251	24811/178	RESISTOR-FIXED METAL-FILM 1K62 +/- 1% 250mW 200V 50 ppm/DEG.C, SURFACE MOUNTED, SIZE MINI-MELF,	VISHAY COMPONENTS	SMM0204-1K62-1%50ppm
R252	24811/601	RESISTOR-FIXED METAL-FILM 33K2 +/- 0.1% 250mW 200V 15 ppm/DEG.C, SURFACE MOUNTED, SIZE MINI-MELF,	VISHAY COMPONENTS	SMM0204-33K2-0.1%-15
R253	24732/306	RESISTOR-FIXED METAL-FILM 6K +/- 0.25% 250mW 200V 50 ppm/DEG.C, AXIAL, (LOOSE OR TAPED).	VISHAY COMPONENTS	EE.10-6K0-C-T-2
R254	24753/626	RESISTOR-FIXED METAL-FILM 2K +/- 0.5% 250mW 200V 50 ppm/DEG.C, AXIAL, (LOOSE OR TAPED).	VISHAY COMPONENTS	EE.10-2K0-D-T-2
R255	24753/624	RESISTOR-FIXED METAL-FILM 1K +/- 0.5% 250mW 200V 50 ppm/DEG.C, AXIAL, (TAPED).	VISHAY COMPONENTS	EE.10-1K0-D-T-2
R256	24753/624	RESISTOR-FIXED METAL-FILM 1K +/- 0.5% 250mW 200V 50 ppm/DEG.C, AXIAL, (TAPED).	VISHAY COMPONENTS	EE.10-1K0-D-T-2
R257	24811/189	RESISTOR-FIXED METAL-FILM 4K75 +/- 1% 250mW 200V 50 ppm/DEG.C, SURFACE MOUNTED, SIZE MINI-MELF,	VISHAY COMPONENTS	SMM0204-4K75-1%50ppm
R258	24811/189	RESISTOR-FIXED METAL-FILM 4K75 +/- 1% 250mW 200V 50 ppm/DEG.C, SURFACE MOUNTED, SIZE MINI-MELF,	VISHAY COMPONENTS	SMM0204-4K75-1%50ppm
R259	24811/165	RESISTOR-FIXED METAL-FILM 475R +/- 1% 250mW 200V 50 ppm/DEG.C, SURFACE MOUNTED, SIZE MINI-MELF,	VISHAY COMPONENTS	SMM0204-475R-1%50ppm
R260	24753/570	RESISTOR-FIXED METAL-FILM 6K92 +/- 0.5% 250mW 200V 50 ppm/DEG.C, AXIAL, (LOOSE OR TAPED).	VISHAY COMPONENTS	EE.10-6K92-D-T-2
R261	24732/261	RESISTOR-FIXED METAL-FILM 59K +/- 0.25% 250mW 200V 25 ppm/DEG.C, AXIAL, (LOOSE OR TAPED).	VISHAY COMPONENTS	EE.10-59K-C-T-9
R262	24811/190	RESISTOR-FIXED METAL-FILM 5K11 +/- 1% 250mW 200V 50 ppm/DEG.C, SURFACE MOUNTED, SIZE MINI-MELF,	VISHAY COMPONENTS	SMM0204-5K11-1%50ppm
R263	25711/637	RESISTOR-VARIABLE CERMET LINEAR, 500R 10% 500mW 200V 150 ppm/DEG.C, SINGLE-TURN, HORIZONTAL-PCB,	VISHAY COMPONENTS	TYA-500R-10%

Audio processor board B1/2 (contd.)

Cir. Ref.	MI part number	Description	Manufacturer	Manufacturer's part number
R264	24753/230	RESISTOR-FIXED METAL-FILM 237K +/- 0.5% 250mW 200V 50 ppm/DEG.C, AXIAL, (TAPED).	VISHAY COMPONENTS	EE.10-237K-D-T-2
R265	24732/265	RESISTOR-FIXED METAL-FILM 19K6 +/- 0.25% 250mW 200V 25 ppm/DEG.C, AXIAL, (LOOSE OR TAPED).	VISHAY COMPONENTS	EE.10-19K6-C-T-9
R266	24811/644	RESISTOR-FIXED METAL-FILM 39K2 +/- 0.1% 250mW 200V 15 ppm/DEG.C, SURFACE MOUNTED, SIZE MINI-MELF,	VISHAY COMPONENTS	SMM0204-39K2-0.1%-15
R267	24811/173	RESISTOR-FIXED METAL-FILM 1K +/- 1% 250mW 200V 50 ppm/DEG.C, SURFACE MOUNTED, SIZE MINI-MELF, (8mm	VISHAY COMPONENTS	SMM0204-1K0-1%-50ppm
R270	24753/583	RESISTOR-FIXED METAL-FILM 61K9 +/- 0.5% 250mW 200V 50 ppm/DEG.C, AXIAL, (LOOSE OR TAPED).	VISHAY COMPONENTS	EE.10-61K9-D-T-2
R271	24732/261	RESISTOR-FIXED METAL-FILM 59K +/- 0.25% 250mW 200V 25 ppm/DEG.C, AXIAL, (LOOSE OR TAPED).	VISHAY COMPONENTS	EE.10-59K-C-T-9
R272	24811/190	RESISTOR-FIXED METAL-FILM 5K11 +/- 1% 250mW 200V 50 ppm/DEG.C, SURFACE MOUNTED, SIZE MINI-MELF,	VISHAY COMPONENTS	SMM0204-5K11-1%50ppm
R273	25711/637	RESISTOR-VARIABLE CERMET LINEAR, 500R 10% 500mW 200V 150 ppm/DEG.C, SINGLE-TURN, HORIZONTAL-PCB,	VISHAY COMPONENTS	TYA-500R-10%
R274	24753/230	RESISTOR-FIXED METAL-FILM 237K +/- 0.5% 250mW 200V 50 ppm/DEG.C, AXIAL, (TAPED).	VISHAY COMPONENTS	EE.10-237K-D-T-2
R275	24732/265	RESISTOR-FIXED METAL-FILM 19K6 +/- 0.25% 250mW 200V 25 ppm/DEG.C, AXIAL, (LOOSE OR TAPED).	VISHAY COMPONENTS	EE.10-19K6-C-T-9
R276	24811/644	RESISTOR-FIXED METAL-FILM 39K2 +/- 0.1% 250mW 200V 15 ppm/DEG.C, SURFACE MOUNTED, SIZE MINI-MELF,	VISHAY COMPONENTS	SMM0204-39K2-0.1%-15
R277	24753/378	RESISTOR-FIXED METAL-FILM 90K9 +/- 0.5% 250mW 200V 50 ppm/DEG.C, AXIAL, (LOOSE OR TAPED).	VISHAY COMPONENTS	EE.10-90K9-D-T-2
R278	24811/165	RESISTOR-FIXED METAL-FILM 475R +/- 1% 250mW 200V 50 ppm/DEG.C, SURFACE MOUNTED, SIZE MINI-MELF,	VISHAY COMPONENTS	SMM0204-475R-1%50ppm
R279	24811/165	RESISTOR-FIXED METAL-FILM 475R +/- 1% 250mW 200V 50 ppm/DEG.C, SURFACE MOUNTED, SIZE MINI-MELF,	VISHAY COMPONENTS	SMM0204-475R-1%50ppm
R280	24811/207	RESISTOR-FIXED METAL-FILM 27K4 +/- 1% 250mW 200V 50 ppm/DEG.C, SURFACE MOUNTED, SIZE MINI-MELF,	VISHAY COMPONENTS	SMM0204-27K4-1%50ppm
R281	24811/207	RESISTOR-FIXED METAL-FILM 27K4 +/- 1% 250mW 200V 50 ppm/DEG.C, SURFACE MOUNTED, SIZE MINI-MELF,	VISHAY COMPONENTS	SMM0204-27K4-1%50ppm
R282	24811/165	RESISTOR-FIXED METAL-FILM 475R +/- 1% 250mW 200V 50 ppm/DEG.C, SURFACE MOUNTED, SIZE MINI-MELF,	VISHAY COMPONENTS	SMM0204-475R-1%50ppm
R283	24811/655	RESISTOR-FIXED METAL-FILM 7K68 +/- 0.1% 250mW 200V 15 ppm/DEG.C, SURFACE MOUNTED, SIZE MINI-MELF,	VISHAY COMPONENTS	SMM0204-7K68-0.1%-15
R284	24811/233	RESISTOR-FIXED METAL-FILM 332K +/- 1% 250mW 200V 50 ppm/DEG.C, SURFACE MOUNTED, SIZE MINI-MELF,	VISHAY COMPONENTS	SMM0204-332K-1%50ppm
R285	24811/165	RESISTOR-FIXED METAL-FILM 475R +/- 1% 250mW 200V 50 ppm/DEG.C, SURFACE MOUNTED, SIZE MINI-MELF,	VISHAY COMPONENTS	SMM0204-475R-1%50ppm
R286	24811/654	RESISTOR-FIXED METAL-FILM 19K6 +/- 0.1% 250mW 200V 15 ppm/DEG.C, SURFACE MOUNTED, SIZE MINI-MELF,	VISHAY COMPONENTS	SMM0204-19K6-0.1%-15
R287	24811/656	RESISTOR-FIXED METAL-FILM 63K4 +/- 0.1% 250mW 200V 15 ppm/DEG.C, SURFACE MOUNTED, SIZE MINI-MELF,	VISHAY COMPONENTS	SMM0204-63K4-0.1%-15
R288	24811/194	RESISTOR-FIXED METAL-FILM 7K5 +/- 1% 250mW 200V 50 ppm/DEG.C, SURFACE MOUNTED, SIZE MINI-MELF, (8mm	VISHAY COMPONENTS	SMM0204-7K5-1%50ppm
R289	24811/194	RESISTOR-FIXED METAL-FILM 7K5 +/- 1% 250mW 200V 50 ppm/DEG.C, SURFACE MOUNTED, SIZE MINI-MELF, (8mm	VISHAY COMPONENTS	SMM0204-7K5-1%50ppm
R290	24811/201	RESISTOR-FIXED METAL-FILM 15K +/- 1% 250mW 200V 50 ppm/DEG.C, SURFACE MOUNTED, SIZE MINI-MELF, (8mm	VISHAY COMPONENTS	SMM0204-15K-1%50ppm
R291	24811/199	RESISTOR-FIXED METAL-FILM 12K1 +/- 1% 250mW 200V 50 ppm/DEG.C, SURFACE MOUNTED, SIZE MINI-MELF,	VISHAY COMPONENTS	SMM0204-12K1-1%50ppm

Audio processor board B1/2 (contd.)

Cir. Ref.	MI part number	Description	Manufacturer	Manufacturer's part number
R292	24811/193	RESISTOR-FIXED METAL-FILM 6K81 +/- 1% 250mW 200V 50 ppm/DEG.C, SURFACE MOUNTED, SIZE MINI-MELF,	VISHAY COMPONENTS	SMM0204-6K81-1%50ppm
R293	24811/175	RESISTOR-FIXED METAL-FILM 1K21 +/- 1% 250mW 200V 50 ppm/DEG.C, SURFACE MOUNTED, SIZE MINI-MELF,	VISHAY COMPONENTS	SMM0204-1K21-1%50ppm
R294	24811/175	RESISTOR-FIXED METAL-FILM 1K21 +/- 1% 250mW 200V 50 ppm/DEG.C, SURFACE MOUNTED, SIZE MINI-MELF,	VISHAY COMPONENTS	SMM0204-1K21-1%50ppm
R295	24811/229	RESISTOR-FIXED METAL-FILM 221K +/- 1% 250mW 200V 50 ppm/DEG.C, SURFACE MOUNTED, SIZE MINI-MELF,	VISHAY COMPONENTS	SMM0204-221K-1%50ppm
R296	24811/173	RESISTOR-FIXED METAL-FILM 1K +/- 1% 250mW 200V 50 ppm/DEG.C, SURFACE MOUNTED, SIZE MINI-MELF, (8mm	VISHAY COMPONENTS	SMM0204-1K0-1%-50ppm
R297	24811/125	RESISTOR-FIXED METAL-FILM 10R +/- 1% 250mW 200V 50 ppm/DEG.C, SURFACE MOUNTED, SIZE MINI-MELF, (8mm	VISHAY COMPONENTS	SMM0204-10R-1%-50ppm
R299	24811/245	RESISTOR-FIXED METAL-FILM 1M +/- 1% 250mW 200V 50 ppm/DEG.C, SURFACE MOUNTED, SIZE MINI-MELF, (8mm	VISHAY COMPONENTS	SMM0204-1M0-1%50ppm
R300	24811/229	RESISTOR-FIXED METAL-FILM 221K +/- 1% 250mW 200V 50 ppm/DEG.C, SURFACE MOUNTED, SIZE MINI-MELF,	VISHAY COMPONENTS	SMM0204-221K-1%50ppm
R301	24811/233	RESISTOR-FIXED METAL-FILM 332K +/- 1% 250mW 200V 50 ppm/DEG.C, SURFACE MOUNTED, SIZE MINI-MELF,	VISHAY COMPONENTS	SMM0204-332K-1%50ppm
R302	24811/234	RESISTOR-FIXED METAL-FILM 365K +/- 1% 250mW 200V 50 ppm/DEG.C, SURFACE MOUNTED, SIZE MINI-MELF,	VISHAY COMPONENTS	SMM0204-365K-1%50ppm
R303	24811/217	RESISTOR-FIXED METAL-FILM 68K1 +/- 1% 250mW 200V 50 ppm/DEG.C, SURFACE MOUNTED, SIZE MINI-MELF,	VISHAY COMPONENTS	SMM0204-68K1-1%50ppm
R304	24811/245	RESISTOR-FIXED METAL-FILM 1M +/- 1% 250mW 200V 50 ppm/DEG.C, SURFACE MOUNTED, SIZE MINI-MELF, (8mm	VISHAY COMPONENTS	SMM0204-1M0-1%50ppm
R305	24811/113	RESISTOR-FIXED METAL-FILM 3R32 +/- 1% 250mW 200V 50 ppm/DEG.C, SURFACE MOUNTED, SIZE MINI-MELF,	VISHAY COMPONENTS	SMM0204-3R32-1%50ppm
R306	24811/173	RESISTOR-FIXED METAL-FILM 1K +/- 1% 250mW 200V 50 ppm/DEG.C, SURFACE MOUNTED, SIZE MINI-MELF, (8mm	VISHAY COMPONENTS	SMM0204-1K0-1%-50ppm
R307	24811/209	RESISTOR-FIXED METAL-FILM 33K2 +/- 1% 250mW 200V 50 ppm/DEG.C, SURFACE MOUNTED, SIZE MINI-MELF,	VISHAY COMPONENTS	SMM0204-33K2-1%50ppm
R308	24811/245	RESISTOR-FIXED METAL-FILM 1M +/- 1% 250mW 200V 50 ppm/DEG.C, SURFACE MOUNTED, SIZE MINI-MELF, (8mm	VISHAY COMPONENTS	SMM0204-1M0-1%50ppm
R310	24681/549	RESISTOR-NETWORK BUSSED, THICK-FILM, 22K 2% 600mW 50V 200 ppm/DEG.C, 15 RESISTORS, SURFACE MOUNTED,	VISHAY COMPONENTS	SOMC16-01-223-G-TUBE
R312	24811/165	RESISTOR-FIXED METAL-FILM 475R +/- 1% 250mW 200V 50 ppm/DEG.C, SURFACE MOUNTED, SIZE MINI-MELF,	VISHAY COMPONENTS	SMM0204-475R-1%50ppm
R315	24811/200	RESISTOR-FIXED METAL-FILM 13K +/- 1% 250mW 200V 50 ppm/DEG.C, SURFACE MOUNTED, SIZE MINI-MELF, (8mm	VISHAY COMPONENTS	SMM0204-13K-1%50ppm
R320	24811/189	RESISTOR-FIXED METAL-FILM 4K75 +/- 1% 250mW 200V 50 ppm/DEG.C, SURFACE MOUNTED, SIZE MINI-MELF,	VISHAY COMPONENTS	SMM0204-4K75-1%50ppm
R321	24811/189	RESISTOR-FIXED METAL-FILM 4K75 +/- 1% 250mW 200V 50 ppm/DEG.C, SURFACE MOUNTED, SIZE MINI-MELF,	VISHAY COMPONENTS	SMM0204-4K75-1%50ppm
R322	24811/173	RESISTOR-FIXED METAL-FILM 1K +/- 1% 250mW 200V 50 ppm/DEG.C, SURFACE MOUNTED, SIZE MINI-MELF, (8mm	VISHAY COMPONENTS	SMM0204-1K0-1%-50ppm
R323	24811/217	RESISTOR-FIXED METAL-FILM 68K1 +/- 1% 250mW 200V 50 ppm/DEG.C, SURFACE MOUNTED, SIZE MINI-MELF,	VISHAY COMPONENTS	SMM0204-68K1-1%50ppm
R350	24811/189	RESISTOR-FIXED METAL-FILM 4K75 +/- 1% 250mW 200V 50 ppm/DEG.C, SURFACE MOUNTED, SIZE MINI-MELF,	VISHAY COMPONENTS	SMM0204-4K75-1%50ppm
R351	24811/189	RESISTOR-FIXED METAL-FILM 4K75 +/- 1% 250mW 200V 50 ppm/DEG.C, SURFACE MOUNTED, SIZE MINI-MELF,	VISHAY COMPONENTS	SMM0204-4K75-1%50ppm
RLA	23486/544	RELAY REED, SINGLE-POLE N/O, 5V COIL, 500R - CONTACTS 0.5A, 100V, INTERNAL DIODE, SPECIAL, PCB	PICKERING ELECTRONIC	106-1-A-5/920D

Cir. Ref.	MI part number	Description	Manufacturer	Manufacturer's part number
Audio processor board B1/2 (contd.)				
TP1 to TP214	23435/188	TERMINAL CONNECTOR-PIN, 0.64mm SQUARE, 5.97mm HIGH, PCB-MOUNTING, SINGLE-ENDED, PHOSPHOR BRONZE,	BERG ELECTRONICS	75401-001
TR70	28487/818	TRANSISTOR NPN BIPOLAR BFS20... 20V 450MHz 200mW 25mA 40hFE MIN @ 7mA, MARKING CODE G1, SURFACE	PHILIPS	BFS20
TR90	28433/828	TRANSISTOR PNP BIPOLAR BC858B... 30V 150MHz 200mW 100mA 220hFE MIN @ 2mA, MARKING CODE 3K, SURFACE	PHILIPS	BC858B
TR91	28453/829	TRANSISTOR NPN BIPOLAR BC848B... 30V 200MHz 200mW 100mA 290hFE @ 2mA, NOISE 2dB @ 1KHz, MARKING CODE	PHILIPS	BC848B
TR150	28453/829	TRANSISTOR NPN BIPOLAR BC848B... 30V 200MHz 200mW 100mA 290hFE @ 2mA, NOISE 2dB @ 1KHz, MARKING CODE	PHILIPS	BC848B
TR230	28459/084	TRANSISTOR N-CHANNEL-ENHANCE MOSFET BST82... 80V 300mW 175mA 7R SWITCH ON & OFF <10nS, MARKING CODE	PHILIPS	BST82(TAPE & REEL)
X100	23642/944	FILTER HF, PCB-MOUNT, CERAMIC, RADIAL, 10.7MHz, 280KHz B/WIDTH @ -3dB, 650KHz B/WIDTH @ -20dB, 330	MURATA ELECTRONICS	SFE10.7MA5-A
X101	23642/944	FILTER HF, PCB-MOUNT, CERAMIC, RADIAL, 10.7MHz, 280KHz B/WIDTH @ -3dB, 650KHz B/WIDTH @ -20dB, 330	MURATA ELECTRONICS	SFE10.7MA5-A

Cir. Ref.	MI part number	Description	Manufacturer	Manufacturer's part number

Microprocessor B2/1

When ordering, prefix circuit reference with B2/1.

	44830-110	Complete unit	Issue 2	
C1	26386/875	CAPACITOR-FIXED CERAMIC 10nF +/-10% 50V X7R/2C1, MULTILAYER, SURFACE-MOUNTED, SIZE 0805, NICKEL	ROHM ELECTRONICS LTD	MCH21-5C-103-KP
C2	26386/875	CAPACITOR-FIXED CERAMIC 10nF +/-10% 50V X7R/2C1, MULTILAYER, SURFACE-MOUNTED, SIZE 0805, NICKEL	ROHM ELECTRONICS LTD	MCH21-5C-103-KP
C5	26582/427	CAPACITOR-FIXED POLYESTER 470nF +/-10% 63V 330 ppm/DEG.C, RADIAL, 5mm PWP, (TAPED).	VISHAY COMPONENTS	MKT-1826-447/065
C6	26386/759	CAPACITOR-FIXED CERAMIC 22nF +/-20% 50V X7R/2C1, MULTILAYER, SURFACE-MOUNTED, SIZE 1206, NICKEL	PHILIPS	1206-2R-223-K9-BBC
C7	26451/006	CAPACITOR-FIXED ALUMINIUM 22uF +/-20% 16V ELECTROLYTIC, SURFACE-MOUNTED, SIZE 5.3 x 5.3mm,	RUBYCON CAPACITORS	16-REV-22
C8	26386/875	CAPACITOR-FIXED CERAMIC 10nF +/-10% 50V X7R/2C1, MULTILAYER, SURFACE-MOUNTED, SIZE 0805, NICKEL	ROHM ELECTRONICS LTD	MCH21-5C-103-KP
C9	26386/899	CAPACITOR-FIXED CERAMIC 100nF +/-10% 50V X7R/2C1, MULTILAYER, SURFACE-MOUNTED, SIZE 1206, NICKEL	ROHM ELECTRONICS LTD	MCH31-5C-104-KP
C10	26386/875	CAPACITOR-FIXED CERAMIC 10nF +/-10% 50V X7R/2C1, MULTILAYER, SURFACE-MOUNTED, SIZE 0805, NICKEL	ROHM ELECTRONICS LTD	MCH21-5C-103-KP
C11	26386/830	CAPACITOR-FIXED CERAMIC 330pF +/-5% 50V NP0 MULTILAYER, SURFACE-MOUNTED, SIZE 0805, NICKEL	ROHM ELECTRONICS LTD	MCH21-5A-331-JP
C12	26386/830	CAPACITOR-FIXED CERAMIC 330pF +/-5% 50V NP0 MULTILAYER, SURFACE-MOUNTED, SIZE 0805, NICKEL	ROHM ELECTRONICS LTD	MCH21-5A-331-JP
C13	26343/767	CAPACITOR-FIXED CERAMIC 10pF +/-5% 50V NPO MULTILAYER, SURFACE-MOUNTED, SIZE 0805, NICKEL	ROHM ELECTRONICS LTD	MCH21-5A-100-DP
C14	26343/767	CAPACITOR-FIXED CERAMIC 10pF +/-5% 50V NPO MULTILAYER, SURFACE-MOUNTED, SIZE 0805, NICKEL	ROHM ELECTRONICS LTD	MCH21-5A-100-DP
C15 to C 7	26386/875	CAPACITOR-FIXED CERAMIC 10nF +/-10% 50V X7R/2C1, MULTILAYER, SURFACE-MOUNTED, SIZE 0805, NICKEL	ROHM ELECTRONICS LTD	MCH21-5C-103-KP
C18	26386/760	CAPACITOR-FIXED CERAMIC 220nF +/-10% 50V X7R MULTILAYER, SURFACE-MOUNTED, SIZE 1210, NICKEL	PHILIPS	1210-2R-224-K9-BBC
C19	26582/427	CAPACITOR-FIXED POLYESTER 470nF +/-10% 63V 330 ppm/DEG.C, RADIAL, 5mm PWP, (TAPED).	VISHAY COMPONENTS	MKT-1826-447/065
C20	26451/004	CAPACITOR-FIXED ALUMINIUM 10uF +/-20% 35V ELECTROLYTIC, SURFACE-MOUNTED, SIZE 5.3 x 5.3mm,	RUBYCON CAPACITORS	35-REV-10
C21	26386/875	CAPACITOR-FIXED CERAMIC 10nF +/-10% 50V X7R/2C1, MULTILAYER, SURFACE-MOUNTED, SIZE 0805, NICKEL	ROHM ELECTRONICS LTD	MCH21-5C-103-KP
C22	26386/777	CAPACITOR-FIXED CERAMIC 47nF +/-20% 63V X7R/2C1, MULTILAYER, SURFACE-MOUNTED, SIZE 1206, NICKEL	PHILIPS	1206-2R-473-K9-BBC
C23	26386/760	CAPACITOR-FIXED CERAMIC 220nF +/-10% 50V X7R MULTILAYER, SURFACE-MOUNTED, SIZE 1210, NICKEL	PHILIPS	1210-2R-224-K9-BBC
C24	26451/004	CAPACITOR-FIXED ALUMINIUM 10uF +/-20% 35V ELECTROLYTIC, SURFACE-MOUNTED, SIZE 5.3 x 5.3mm,	RUBYCON CAPACITORS	35-REV-10
C25	26451/004	CAPACITOR-FIXED ALUMINIUM 10uF +/-20% 35V ELECTROLYTIC, SURFACE-MOUNTED, SIZE 5.3 x 5.3mm,	RUBYCON CAPACITORS	35-REV-10
C26	26582/427	CAPACITOR-FIXED POLYESTER 470nF +/-10% 63V 330 ppm/DEG.C, RADIAL, 5mm PWP, (TAPED).	VISHAY COMPONENTS	MKT-1826-447/065
C27	26386/760	CAPACITOR-FIXED CERAMIC 220nF +/-10% 50V X7R MULTILAYER, SURFACE-MOUNTED, SIZE 1210, NICKEL	PHILIPS	1210-2R-224-K9-BBC

Microprocessor board B2/1 (contd.)

Cir. Ref.	MI part number	Description	Manufacturer	Manufacturer's part number
C28	26386/760	CAPACITOR-FIXED CERAMIC 220nF +/-10% 50V X7R MULTILAYER, SURFACE-MOUNTED, SIZE 1210, NICKEL	PHILIPS	1210-2R-224-K9-BBC
C29	26451/004	CAPACITOR-FIXED ALUMINIUM 10uF +/-20% 35V ELECTROLYTIC, SURFACE-MOUNTED, SIZE 5.3 x 5.3mm,	RUBYCON CAPACITORS	35-REV-10
C30	26386/863	CAPACITOR-FIXED CERAMIC 1nF +/-10% 50V X7R/2C1, MULTILAYER, SURFACE-MOUNTED, SIZE 0805, NICKEL	ROHM ELECTRONICS LTD	MCH21-5C-102-KP
C31	26451/004	CAPACITOR-FIXED ALUMINIUM 10uF +/-20% 35V ELECTROLYTIC, SURFACE-MOUNTED, SIZE 5.3 x 5.3mm,	RUBYCON CAPACITORS	35-REV-10
C32	26451/008	CAPACITOR-FIXED ALUMINIUM 47uF +/-20% 6.3V ELECTROLYTIC, SURFACE-MOUNTED, SIZE 5.3 x 5.3mm,	PANASONIC INDUSTRIAL	ECE-V-0JA-470P
C33	26451/008	CAPACITOR-FIXED ALUMINIUM 47uF +/-20% 6.3V ELECTROLYTIC, SURFACE-MOUNTED, SIZE 5.3 x 5.3mm,	PANASONIC INDUSTRIAL	ECE-V-0JA-470P
C34	26451/006	CAPACITOR-FIXED ALUMINIUM 22uF +/-20% 16V ELECTROLYTIC, SURFACE-MOUNTED, SIZE 5.3 x 5.3mm,	RUBYCON CAPACITORS	16-REV-22
C35	26451/006	CAPACITOR-FIXED ALUMINIUM 22uF +/-20% 16V ELECTROLYTIC, SURFACE-MOUNTED, SIZE 5.3 x 5.3mm,	RUBYCON CAPACITORS	16-REV-22
C36	26386/899	CAPACITOR-FIXED CERAMIC 100nF +/-10% 50V X7R/2C1, MULTILAYER, SURFACE-MOUNTED, SIZE 1206, NICKEL	ROHM ELECTRONICS LTD	MCH31-5C-104-KP
C37	26451/004	CAPACITOR-FIXED ALUMINIUM 10uF +/-20% 35V ELECTROLYTIC, SURFACE-MOUNTED, SIZE 5.3 x 5.3mm,	RUBYCON CAPACITORS	35-REV-10
C38	26451/006	CAPACITOR-FIXED ALUMINIUM 22uF +/-20% 16V ELECTROLYTIC, SURFACE-MOUNTED, SIZE 5.3 x 5.3mm,	RUBYCON CAPACITORS	16-REV-22
C39	26451/009	CAPACITOR-FIXED ALUMINIUM 47uF +/-20% 16V ELECTROLYTIC, SURFACE-MOUNTED, SIZE 6.6 x 6.6mm,	PANASONIC INDUSTRIAL	ECE-V-1CA-470P
C40	26386/899	CAPACITOR-FIXED CERAMIC 100nF +/-10% 50V X7R/2C1, MULTILAYER, SURFACE-MOUNTED, SIZE 1206, NICKEL	ROHM ELECTRONICS LTD	MCH31-5C-104-KP
C41 to C43	26582/427	CAPACITOR-FIXED POLYESTER 470nF +/-10% 63V 330 ppm/DEG.C, RADIAL, 5mm PWP, (TAPED).	VISHAY COMPONENTS	MKT-1826-447/065
C44 to C46	26451/006	CAPACITOR-FIXED ALUMINIUM 22uF +/-20% 16V ELECTROLYTIC, SURFACE-MOUNTED, SIZE 5.3 x 5.3mm,	RUBYCON CAPACITORS	16-REV-22
C47	26386/760	CAPACITOR-FIXED CERAMIC 220nF +/-10% 50V X7R MULTILAYER, SURFACE-MOUNTED, SIZE 1210, NICKEL	PHILIPS	1210-2R-224-K9-BBC
C48	26386/777	CAPACITOR-FIXED CERAMIC 47nF +/-20% 63V X7R/2C1, MULTILAYER, SURFACE-MOUNTED, SIZE 1206, NICKEL	PHILIPS	1206-2R-473-K9-BBC
C49	26386/760	CAPACITOR-FIXED CERAMIC 220nF +/-10% 50V X7R MULTILAYER, SURFACE-MOUNTED, SIZE 1210, NICKEL	PHILIPS	1210-2R-224-K9-BBC
C50	26386/899	CAPACITOR-FIXED CERAMIC 100nF +/-10% 50V X7R/2C1, MULTILAYER, SURFACE-MOUNTED, SIZE 1206, NICKEL	ROHM ELECTRONICS LTD	MCH31-5C-104-KP
C51	26386/899	CAPACITOR-FIXED CERAMIC 100nF +/-10% 50V X7R/2C1, MULTILAYER, SURFACE-MOUNTED, SIZE 1206, NICKEL	ROHM ELECTRONICS LTD	MCH31-5C-104-KP
C52	26451/009	CAPACITOR-FIXED ALUMINIUM 47uF +/-20% 16V ELECTROLYTIC, SURFACE-MOUNTED, SIZE 6.6 x 6.6mm,	PANASONIC INDUSTRIAL	ECE-V-1CA-470P
C53	26386/899	CAPACITOR-FIXED CERAMIC 100nF +/-10% 50V X7R/2C1, MULTILAYER, SURFACE-MOUNTED, SIZE 1206, NICKEL	ROHM ELECTRONICS LTD	MCH31-5C-104-KP
C54 to C119	26386/875	CAPACITOR-FIXED CERAMIC 10nF +/-10% 50V X7R/2C1, MULTILAYER, SURFACE-MOUNTED, SIZE 0805, NICKEL	ROHM ELECTRONICS LTD	MCH21-5C-103-KP
C120	26451/006	CAPACITOR-FIXED ALUMINIUM 22uF +/-20% 16V ELECTROLYTIC, SURFACE-MOUNTED, SIZE 5.3 x 5.3mm,	RUBYCON CAPACITORS	16-REV-22
C121	26386/899	CAPACITOR-FIXED CERAMIC 100nF +/-10% 50V X7R/2C1, MULTILAYER, SURFACE-MOUNTED, SIZE 1206, NICKEL	ROHM ELECTRONICS LTD	MCH31-5C-104-KP
C122	26386/830	CAPACITOR-FIXED CERAMIC 330pF +/-5% 50V NP0 MULTILAYER, SURFACE-MOUNTED, SIZE 0805, NICKEL	ROHM ELECTRONICS LTD	MCH21-5A-331-JP

Cir. Ref.	MI part number	Description	Manufacturer	Manufacturer's part number
Microprocessor board B2/1 (contd.)				
C123	26386/867	CAPACITOR-FIXED CERAMIC 2.2nF +/-10% 50V X7R/2C1, MULTILAYER, SURFACE-MOUNTED, SIZE 0805, NICKEL	ROHM ELECTRONICS LTD	MCH21-5C-222-KP
C124	26386/875	CAPACITOR-FIXED CERAMIC 10nF +/-10% 50V X7R/2C1, MULTILAYER, SURFACE-MOUNTED, SIZE 0805, NICKEL	ROHM ELECTRONICS LTD	MCH21-5C-103-KP
C125	26386/885	CAPACITOR-FIXED CERAMIC 68nF 10% 50V X7R MULTILAYER, SURFACE-MOUNTED, SIZE 1210, NICKEL	ROHM ELECTRONICS LTD	MCH32-5C-683-KP
C126 to C130	26386/875	CAPACITOR-FIXED CERAMIC 10nF +/-10% 50V X7R/2C1, MULTILAYER, SURFACE-MOUNTED, SIZE 0805, NICKEL	ROHM ELECTRONICS LTD	MCH21-5C-103-KP
C131	26451/006	CAPACITOR-FIXED ALUMINIUM 22uF +/-20% 16V ELECTROLYTIC, SURFACE-MOUNTED, SIZE 5.3 x 5.3mm,	RUBYCON CAPACITORS	16-REV-22
C133	26386/875	CAPACITOR-FIXED CERAMIC 10nF +/-10% 50V X7R/2C1, MULTILAYER, SURFACE-MOUNTED, SIZE 0805, NICKEL	ROHM ELECTRONICS LTD	MCH21-5C-103-KP
C134	26386/875	CAPACITOR-FIXED CERAMIC 10nF +/-10% 50V X7R/2C1, MULTILAYER, SURFACE-MOUNTED, SIZE 0805, NICKEL	ROHM ELECTRONICS LTD	MCH21-5C-103-KP
C135	26386/818	CAPACITOR-FIXED CERAMIC 33pF +/-5% 50V NP0 MULTILAYER, SURFACE-MOUNTED, SIZE 0805, NICKEL	ROHM ELECTRONICS LTD	MCH21-5A-330-JP
C136	26421/118	CAPACITOR-FIXED ALUMINIUM 100uF +/-20% 6.3V ELECTROLYTIC, RADIAL, 5mm PWP, (TAPED).	PANASONIC INDUSTRIAL	ECE-A-0J-KA-101-B
D1	28372/215	DIODE ZENER, BZX84-C12... 350mW 12V 5% 250mA MARKING CODE Y2, SURFACE MOUNTED, SOT-23, (8mm	PHILIPS	BZX84-C12 (Y2)
D2 to D6	28349/034	DIODE SMALL-SIGNAL, SCHOTTKY, BAT54... 160mW 30V 100mA MARKING CODE L4p, SURFACE MOUNTED, SOT-23,	PHILIPS	BAT54-T1
D7 to D10	28383/934	DIODE SMALL-SIGNAL, LL4148... 500mW 50V 150mA 1Vf @ 10mA, SURFACE MOUNTED, MINI-MELF, (8mm TAPE -	PHILIPS	PMLL4148L
D13 to D18	28383/901	DIODE SMALL-SIGNAL, BAV70... DUAL, 70V 100mA 1.1Vf @ 50mA, COMMON CATHODE, MARKING CODE A4, SURFACE	PHILIPS	BAV70
D19 to D22	28335/670	DIODE BAND SWITCHING, BAT18... 35V 100mA 1pF MAX @ 20V, 1.2Vf @ 100mA, MARKING CODE A2, SURFACE	PHILIPS	BAT18/T1
D23	28371/302	DIODE ZENER, BZX84-C4V7... 350mW 4.7V 5% 250mA MARKING CODE Z1, SURFACE MOUNTED, SOT-23, (8mm	PHILIPS	BZX84-C4V7
D24	28371/412	DIODE ZENER, BZX84-C5V1... 350mW 5.1V 5% 250mA MARKING CODE Z2, SURFACE MOUNTED, SOT-23, (8mm	PHILIPS	BZX84-C5V1
D25	28371/412	DIODE ZENER, BZX84-C5V1... 350mW 5.1V 5% 250mA MARKING CODE Z2, SURFACE MOUNTED, SOT-23, (8mm	PHILIPS	BZX84-C5V1
D27	28349/034	DIODE SMALL-SIGNAL, SCHOTTKY, BAT54... 160mW 30V 100mA MARKING CODE L4p, SURFACE MOUNTED, SOT-23,	PHILIPS	BAT54-T1
D28	28349/034	DIODE SMALL-SIGNAL, SCHOTTKY, BAT54... 160mW 30V 100mA MARKING CODE L4p, SURFACE MOUNTED, SOT-23,	PHILIPS	BAT54-T1
D29	28335/670	DIODE BAND SWITCHING, BAT18... 35V 100mA 1pF MAX @ 20V, 1.2Vf @ 100mA, MARKING CODE A2, SURFACE	PHILIPS	BAT18/T1
D30	28335/670	DIODE BAND SWITCHING, BAT18... 35V 100mA 1pF MAX @ 20V, 1.2Vf @ 100mA, MARKING CODE A2, SURFACE	PHILIPS	BAT18/T1
D31	28383/901	DIODE SMALL-SIGNAL, BAV70... DUAL, 70V 100mA 1.1Vf @ 50mA, COMMON CATHODE, MARKING CODE A4, SURFACE	PHILIPS	BAV70
D32 to D34	28335/670	DIODE BAND SWITCHING, BAT18... 35V 100mA 1pF MAX @ 20V, 1.2Vf @ 100mA, MARKING CODE A2, SURFACE	PHILIPS	BAT18/T1
D35	28371/768	DIODE ZENER, BZX84-C9V1... 350mW 9.1V 5% 250mA MARKING CODE Z8, SURFACE MOUNTED, SOT-23, (8mm	PHILIPS	BZX84-C9V1
D36	28371/768	DIODE ZENER, BZX84-C9V1... 350mW 9.1V 5% 250mA MARKING CODE Z8, SURFACE MOUNTED, SOT-23, (8mm	PHILIPS	BZX84-C9V1

Microprocessor board B2/1 (contd.)

Cir. Ref.	MI part number	Description	Manufacturer	Manufacturer's part number
D37	28349/034	DIODE SMALL-SIGNAL, SCHOTTKY, BAT54... 160mW 30V 100mA MARKING CODE L4p, SURFACE MOUNTED, SOT-23,	PHILIPS	BAT54-T1
D38	28349/034	DIODE SMALL-SIGNAL, SCHOTTKY, BAT54... 160mW 30V 100mA MARKING CODE L4p, SURFACE MOUNTED, SOT-23,	PHILIPS	BAT54-T1
IC1	44535/315	IC-PROGRAMMED PAL SET OF 1 (2945)EXTERNAL STANDARD		
IC3	28469/543	IC-DIGITAL COUNTER 74HC390... 4 BIT, DUAL, DECADE RIPPLE, CMOS-H/SPEED, 16 PIN, SMALL-OUTLINE.	PHILIPS	74HC390D
IC4	28466/412	IC-DIGITAL EXCLUSIVE-OR 74HCT86... 2 INPUT, QUAD, CMOS-H/SPEED+TTL, 14 PIN, SMALL-OUTLINE.	PHILIPS	74HCT86D
IC5	28464/189	IC-DIGITAL COUNTER 74HC393... 4 BIT, DUAL, BINARY RIPPLE, CMOS-H/SPEED, 14 PIN, SMALL-OUTLINE.	PHILIPS	74HC393D
IC6	28462/136	IC-DIGITAL FLIP-FLOP/D-TYPE 74HCT74... 2 BIT, DUAL, POS EDGE TRIGGER, PLUS SET & CLEAR,	PHILIPS	74HCT74D
IC7	28461/815	IC-ANALOGUE PHASE-LOCKED-LOOP NE564D... 45MHz MIN, 16 PIN, SMALL-OUTLINE.	PHILIPS	NE564D
IC8	28469/543	IC-DIGITAL COUNTER 74HC390... 4 BIT, DUAL, DECADE RIPPLE, CMOS-H/SPEED, 16 PIN, SMALL-OUTLINE.	PHILIPS	74HC390D
IC9	28467/117	IC-MICRO STATIC-RAM, 128K x 8 BIT, HM628128... 5V, 100nS, 50uA MAX STANDBY CURRENT, CMOS, 32 PIN,	TOSHIBA (UK) LTD	TC551001BFL-10L
IC10	28469/338	IC-MICRO STATIC-RAM, 8K x 8 BIT, MK48Z08... 5V +/-5%, 150nS, NON-VOLATILE, WITH INTERNAL LITHIUM	SGS-THOMSON	MK48Z08B-10
IC11	28488/187	SOCKET INTEGRATED-CIRCUIT, 32 WAY, DUAL-IN-LINE, 15.24mm ROW PITCH, LOW-PROFILE, TURNED PIN,	AUGAT LTD	1832-AG111D
IC12	28488/187	SOCKET INTEGRATED-CIRCUIT, 32 WAY, DUAL-IN-LINE, 15.24mm ROW PITCH, LOW-PROFILE, TURNED PIN,	AUGAT LTD	1832-AG111D
IC13	28467/133	IC-MICRO PROCESSOR, 80C188... 16 BIT, 12.5MHz, CHMOS, 68 PIN, PLCC.	ADVANCED MICRO DEV	N80C188-12
IC14	28469/573	IC-DIGITAL LATCH 74ACT373... OCTAL, TRANSPARENT WITH TRI-STATE BUS, CMOS-ADVANCED+TTL, 20 PIN,	NAT. SEMICONDUCTOR	74ACT373SC
IC15	28469/573	IC-DIGITAL LATCH 74ACT373... OCTAL, TRANSPARENT WITH TRI-STATE BUS, CMOS-ADVANCED+TTL, 20 PIN,	NAT. SEMICONDUCTOR	74ACT373SC
IC16	28462/431	IC-DIGITAL LATCH 74HCT373... OCTAL, TRANSPARENT WITH TRI-STATE BUS, CMOS-H/SPEED+TTL, 20 PIN,	PHILIPS	74HCT373D
IC17	28469/027	IC-DIGITAL INVERTER 74HCT14... HEX, SCHMITT-TRIGGER OPERATION, CMOS-H/SPEED+TTL, 14	PHILIPS	74HCT14D
IC18	44535/285	IC-PROGRAMMED PAL, SET OF 1, 2945, MEMORY DECODER.		
IC19	44535/286	IC-PROGRAMMED PAL, SET OF 1, 2945, WAIT STATE GENERATOR.		
IC20	28466/122	IC-DIGITAL OR-GATE 74ACT32... 2 INPUT, QUAD, CMOS-ADVANCED+TTL, 14 PIN, SMALL-OUTLINE.	NAT. SEMICONDUCTOR	74ACT32SC
IC21	28469/049	IC-DIGITAL TRANSCEIVER 74HCT245... OCTAL, BI-DIRECTIONAL, TRI-STATE BUS, CMOS-H/SPEED+TTL,	PHILIPS	74HCT245D
IC22	28469/049	IC-DIGITAL TRANSCEIVER 74HCT245... OCTAL, BI-DIRECTIONAL, TRI-STATE BUS, CMOS-H/SPEED+TTL,	PHILIPS	74HCT245D
IC23	28466/122	IC-DIGITAL OR-GATE 74ACT32... 2 INPUT, QUAD, CMOS-ADVANCED+TTL, 14 PIN, SMALL-OUTLINE.	NAT. SEMICONDUCTOR	74ACT32SC
IC24	28465/053	IC-DIGITAL DECODER/DEMULTIPLEX 74HCT138... 3 INPUT, 8 BIT, SINGLE, INVERTING, 3 BIT ADDRESS,	PHILIPS	74HCT138D

Cir. Ref.	MI part number	Description	Manufacturer	Manufacturer's part number
Microprocessor board B2/1 (contd.)				
IC25	28465/053	IC-DIGITAL DECODER/DEMULTIPLEX 74HCT138... 3 INPUT, 8 BIT, SINGLE, INVERTING, 3 BIT ADDRESS,	PHILIPS	74HCT138D
IC26	28466/600	IC-DIGITAL NAND-GATE 74HC30... 8 INPUT, SINGLE, CMOS-H/SPEED, 14 PIN, SMALL-OUTLINE.	PHILIPS	74HC30D
IC27	28469/058	IC-DIGITAL BUFFER/LINE-DRIVER 74HC244... 4 INPUT, 4 BIT, DUAL, NON-INVERTING, TRI-STATE BUS,	PHILIPS	74HC244D
IC28	28462/157	IC-DIGITAL FLIP-FLOP/D-TYPE 74HC377... OCTAL, POS EDGE TRIGGER WITH DATA ENABLE, CMOS-H/SPEED, 20	PHILIPS	74HC377D
IC29	28466/412	IC-DIGITAL EXCLUSIVE-OR 74HCT86... 2 INPUT, QUAD, CMOS-H/SPEED+TTL, 14 PIN, SMALL-OUTLINE.	PHILIPS	74HCT86D
IC30	28469/772	IC-DIGITAL MULTIPLEXER 74HC153... 4 INPUT, 1 BIT, DUAL, NON-INVERTING, 4 TO 1, CMOS-H/SPEED, 16 PIN,	PHILIPS	74HC153D
IC31	28462/638	IC-DIGITAL FLIP-FLOP/D-TYPE 74HC74... 2 BIT, DUAL, POS EDGE TRIGGER, PLUS SET & CLEAR, CMOS-H/SPEED,	PHILIPS	74HC74D
IC32	28471/044	IC-MICRO EEPROM, 8K x 8 BIT, 28C64... 200nS, 64 BYTE PAGE WRITE MODE, CMOS, 32 PIN, PLCC.	ATMEL CORPORATION	AT28C64B-20JC
IC33	28469/058	IC-DIGITAL BUFFER/LINE-DRIVER 74HC244... 4 INPUT, 4 BIT, DUAL, NON-INVERTING, TRI-STATE BUS,	PHILIPS	74HC244D
IC34	28462/164	IC-DIGITAL FLIP-FLOP/D-TYPE 74AC377... OCTAL, POS EDGE TRIGGER WITH DATA ENABLE, CMOS-ADVANCED, 20	NAT. SEMICONDUCTOR	74AC377SC
IC35	28469/058	IC-DIGITAL BUFFER/LINE-DRIVER 74HC244... 4 INPUT, 4 BIT, DUAL, NON-INVERTING, TRI-STATE BUS,	PHILIPS	74HC244D
IC36	28466/120	IC-DIGITAL OR-GATE 74HC32... 2 INPUT, QUAD, CMOS-H/SPEED, 14 PIN, SMALL-OUTLINE.	PHILIPS	74HC32D
IC37	28462/638	IC-DIGITAL FLIP-FLOP/D-TYPE 74HC74... 2 BIT, DUAL, POS EDGE TRIGGER, PLUS SET & CLEAR, CMOS-H/SPEED,	PHILIPS	74HC74D
IC38	28465/067	IC-DIGITAL ENCODER 74HC148... 8 INPUT, 3 BIT, SINGLE, PRIORITY ENCODING, CMOS-H/SPEED, 16 PIN,	TEXAS INSTRUMENTS	SN74HC148D
IC39	28465/067	IC-DIGITAL ENCODER 74HC148... 8 INPUT, 3 BIT, SINGLE, PRIORITY ENCODING, CMOS-H/SPEED, 16 PIN,	TEXAS INSTRUMENTS	SN74HC148D
IC40	28462/157	IC-DIGITAL FLIP-FLOP/D-TYPE 74HC377... OCTAL, POS EDGE TRIGGER WITH DATA ENABLE, CMOS-H/SPEED, 20	PHILIPS	74HC377D
IC41	28467/132	IC-MICRO CONTROLLER, 82C51A... UNIVERSAL SYN/ASYN, RECEIVER/TRANSMITTR, 10MHz, CMOS, 28 PIN, PLCC.	NEC ELECTRONICS LTD	uPD71051L-10
IC42	28469/044	IC-DIGITAL BUFFER/LINE-DRIVER 1488... QUAD, UNBALANCED, INVERTING, TO RS-232D AND CCITT V.24,	NAT. SEMICONDUCTOR	DS1488M
IC43	28469/045	IC-DIGITAL RECEIVER 1489... 4 INPUT, 4 BIT, QUAD, RS 232 RECEIVER, MOS, 14 PIN, SMALL-OUTLINE.	NAT. SEMICONDUCTOR	DS1489M
IC44	28461/004	IC-ANALOGUE A/D CONVERTER ADC0809CCV... 8 BIT, 8 CHANNEL MULTIPLEXER, BUS-COMPATIBLE, TOTAL ERROR	NAT. SEMICONDUCTOR	ADC0809CCV
IC45	28466/241	IC-DIGITAL NOR-GATE 74HC02... 2 INPUT, QUAD, CMOS-H/SPEED, 14 PIN, SMALL-OUTLINE.	PHILIPS	74HC02D
IC46	28468/321	IC-DIGITAL FLIP-FLOP/MONOSTABLE 74HC123... DUAL, RETRIGGERABLE, tW = 0.45RC, WITH RESET,	PHILIPS	74HC123D
IC47	28462/639	IC-DIGITAL FLIP-FLOP/D-TYPE 74AC374... OCTAL, NON-INVERTING, POS EDGE TRIGGER, TRI-STATE,	NAT. SEMICONDUCTOR	74AC374SC
IC48	28461/413	IC-ANALOGUE OPERATIONAL AMP TL074... QUAD, JFET INPUT, LOW NOISE, SLEW RATE 8V/uS MIN, GAIN	MOTOROLA INC.	TL074CD
IC49	28461/939	IC-ANALOGUE RMS/DC CONVERTER AD536AJH... LINEAR, MONOLITHIC, 10 PIN, TO-100.	ANALOG DEVICES LTD	AD536AJH
IC50	28461/413	IC-ANALOGUE OPERATIONAL AMP TL074... QUAD, JFET INPUT, LOW NOISE, SLEW RATE 8V/uS MIN, GAIN	MOTOROLA INC.	TL074CD

Cir. Ref.	MI part number	Description	Manufacturer	Manufacturer's part number
Microprocessor board B2/1 (contd.)				
IC51	28461/898	IC-ANALOGUE D/A-CONVERTER 7528... 8 INPUT, DUAL, 8-BIT, BUFFERED, MULTIPLYING, CMOS, 20 PIN,	ANALOG DEVICES LTD	AD7528JR
IC52 to IC54	28462/157	IC-DIGITAL FLIP-FLOP/D-TYPE 74HC377... OCTAL, POS EDGE TRIGGER WITH DATA ENABLE, CMOS-H/SPEED, 20	PHILIPS	74HC377D
IC55	44535/284	IC-PROGRAMMED FPGA, SET OF 1, 2945.		
IC56	28467/108	IC-MICRO DIGIT/SGNL PROCESSR, ADSP2105... 10MHz DIGITAL SIGNAL PROCESSING, 1K PROGRAM & 0.5K DATA	ANALOG DEVICES LTD	ADSP2105KP-40
IC57	44535/287	IC-PROGRAMMED PAL, SET OF 1, 2945, DSP DECODER.		
IC58	28462/431	IC-DIGITAL LATCH 74HCT373... OCTAL, TRANSPARENT WITH TRI-STATE BUS, CMOS-H/SPEED+TTL, 20 PIN,	PHILIPS	74HCT373D
IC59	28462/431	IC-DIGITAL LATCH 74HCT373... OCTAL, TRANSPARENT WITH TRI-STATE BUS, CMOS-H/SPEED+TTL, 20 PIN,	PHILIPS	74HCT373D
IC60 to IC62	28469/573	IC-DIGITAL LATCH 74ACT373... OCTAL, TRANSPARENT WITH TRI-STATE BUS, CMOS-ADVANCED+TTL, 20 PIN,	NAT. SEMICONDUCTOR	74ACT373SC
IC63	28467/118	IC-MICRO STATIC-RAM, 32K x 8 BIT, 62256... 100nS, 100uA STANDBY CURRENT, 0.45in PITCH, CMOS, 28 PIN,	TOSHIBA (UK) LTD	TC55257BFL-10
IC64	28467/118	IC-MICRO STATIC-RAM, 32K x 8 BIT, 62256... 100nS, 100uA STANDBY CURRENT, 0.45in PITCH, CMOS, 28 PIN,	TOSHIBA (UK) LTD	TC55257BFL-10
IC65	28462/151	IC-DIGITAL FLIP-FLOP/D-TYPE 74HC374... 1 INPUT, OCTAL, NON-INVERTING, POS EDGE TRIGGER, TRI-STATE,	PHILIPS	74HC374D
IC66	28461/818	IC-ANALOGUE A/D CONVERTER 7821... SINGLE, 5V 8 BIT, HALF-FLASH, ERROR +/-1/2 LSB, RD-CONVERSION	ANALOG DEVICES LTD	AD7821KR
IC67	28462/151	IC-DIGITAL FLIP-FLOP/D-TYPE 74HC374... 1 INPUT, OCTAL, NON-INVERTING, POS EDGE TRIGGER, TRI-STATE,	PHILIPS	74HC374D
IC68	44535/288	IC-PROGRAMMED PAL, SET OF 1, 2945, FRACTIONAL DECODER.		
IC69	28461/898	IC-ANALOGUE D/A-CONVERTER 7528... 8 INPUT, DUAL, 8-BIT, BUFFERED, MULTIPLYING, CMOS, 20 PIN,	ANALOG DEVICES LTD	AD7528JR
IC70	28462/157	IC-DIGITAL FLIP-FLOP/D-TYPE 74HC377... OCTAL, POS EDGE TRIGGER WITH DATA ENABLE, CMOS-H/SPEED, 20	PHILIPS	74HC377D
IC71	28461/029	IC-ANALOGUE SWITCH DG211... QUAD, 15V SPST, ON-RESISTANCE <175R, TTL COMPATIBLE, CMOS, 16 PIN,	ANALOG DEVICES LTD	ADG211AKR
IC72	28461/413	IC-ANALOGUE OPERATIONAL AMP TL074... QUAD, JFET INPUT, LOW NOISE, SLEW RATE 8V/uS MIN, GAIN	MOTOROLA INC.	TL074CD
IC73	28461/673	IC-ANALOGUE COMPARATOR LM339... QUAD, SINGLE SUPPLY, BIPOLAR, 14 PIN, SMALL-OUTLINE.	PHILIPS	LM339D
IC74	28461/411	IC-ANALOGUE OPERATIONAL AMP TL071... SINGLE, JFET INPUT, LOW NOISE, 8 PIN, SMALL-OUTLINE.	MOTOROLA INC.	TL071CD
IC75	28461/413	IC-ANALOGUE OPERATIONAL AMP TL074... QUAD, JFET INPUT, LOW NOISE, SLEW RATE 8V/uS MIN, GAIN	MOTOROLA INC.	TL074CD
IC76	28466/412	IC-DIGITAL EXCLUSIVE-OR 74HCT86... 2 INPUT, QUAD, CMOS-H/SPEED+TTL, 14 PIN, SMALL-OUTLINE.	PHILIPS	74HCT86D
IC77	28462/638	IC-DIGITAL FLIP-FLOP/D-TYPE 74HC74... 2 BIT, DUAL, POS EDGE TRIGGER, PLUS SET & CLEAR, CMOS-H/SPEED,	PHILIPS	74HC74D
IC78	28461/803	IC-ANALOGUE VOLTAGE-REFERENCE LT1019... 5V PRECISION, OUTPUT VOLTAGE DRIFT 20ppm/DEG.C MAX,	LINEAR TECHNOLOGY	LT1019CS8-5
IC79	28466/122	IC-DIGITAL OR-GATE 74ACT32... 2 INPUT, QUAD, CMOS-ADVANCED+TTL, 14 PIN, SMALL-OUTLINE.	NAT. SEMICONDUCTOR	74ACT32SC
IC80	28461/774	IC-ANALOGUE VOLTAGE-REGULATOR 78L05AC... 5V +/-5%, POSITIVE, LINEAR, BIPOLAR, 8 PIN, SMALL-OUTLINE.	NAT. SEMICONDUCTOR	LM78L05ACM

Cir. Ref.	MI part number	Description	Manufacturer	Manufacturer's part number
Microprocessor board B2/1 (contd.)				
IC81	28461/807	IC-ANALOGUE VOLTAGE-REGULATOR TL7705BCP... 5V SUPPLY MONITOR, VOLTAGE SUPERVISOR, 8 PIN,	TEXAS INSTRUMENTS	TL7705BCP
IC82	28469/027	IC-DIGITAL INVERTER 74HCT14... HEX, SCHMITT-TRIGGER OPERATION, CMOS-H/SPEED+TTL, 14	PHILIPS	74HCT14D
IC83	28466/385	IC-DIGITAL NAND-GATE 74HCT00... 2 INPUT, QUAD, CMOS-H/SPEED+TTL, 14 PIN, SMALL-OUTLINE.	PHILIPS	74HCT00D
IC84	28469/058	IC-DIGITAL BUFFER/LINE-DRIVER 74HC244... 4 INPUT, 4 BIT, DUAL, NON-INVERTING, TRI-STATE BUS.	PHILIPS	74HC244D
L1	23642/533	INDUCTOR-FIXED 10uH +/- 5% EPOXY-MOULD, 150mA 2R1 MAX, 30 Q @ 2.52 MHz, 36 MHz SRF, SURFACE MOUNTED,	MEGGITT ELECTRONICS	3612-T-100-J
L2	23642/535	INDUCTOR-FIXED 1uH +/- 5% EPOXY-MOULD, 400mA 0R7 MAX, 30 Q @ 7.96 MHz, 120 MHz SRF, SURFACE	MEGGITT ELECTRONICS	3612-T-1R0-J
L3	23642/533	INDUCTOR-FIXED 10uH +/- 5% EPOXY-MOULD, 150mA 2R1 MAX, 30 Q @ 2.52 MHz, 36 MHz SRF, SURFACE MOUNTED,	MEGGITT ELECTRONICS	3612-T-100-J
L4	23642/064	INDUCTOR-FIXED 1mH +/- 10% UNSCREENED, AIR-CORED, 510mA 1R176 MAX, 20 Q @ 0.796 MHz, 13mm HIGH MAX,	TOKO (UK) LTD	494HYF0140K
PLA to PLP	23435/188	TERMINAL CONNECTOR-PIN, 0.64mm SQUARE, 5.97mm HIGH, PCB-MOUNTING, SINGLE-ENDED, PHOSPHOR BRONZE.	BERG ELECTRONICS	75401-001
PLR	23436/764	CONNECTOR MULTIWAY, PCB HEADER, 2 WAY, STRAIGHT, 2mm PITCH, NYLON BODY, LIGHT BROWN.	JAE ELECTRONICS	IL-S-2P-S2T2-EF
PLS	23435/112	CONNECTOR MULTIWAY, PCB HEADER, 36 WAY, RIGHT ANGLED, 2.54mm PITCH, PINS GOLD PLATED TO CLASS 2.	BERG ELECTRONICS	75168-107-36
PLT to PLY	23435/188	TERMINAL CONNECTOR-PIN, 0.64mm SQUARE, 5.97mm HIGH, PCB-MOUNTING, SINGLE-ENDED, PHOSPHOR BRONZE.	BERG ELECTRONICS	75401-001
R1	24811/203	RESISTOR-FIXED METAL-FILM 18K2 +/- 1% 250mW 200V 50 ppm/DEG.C, SURFACE MOUNTED, SIZE MINI-MELF.	VISHAY COMPONENTS	SMM0204-18K2-1%50ppm
R2	24811/193	RESISTOR-FIXED METAL-FILM 6K81 +/- 1% 250mW 200V 50 ppm/DEG.C, SURFACE MOUNTED, SIZE MINI-MELF,	VISHAY COMPONENTS	SMM0204-6K81-1%50ppm
R3	24811/137	RESISTOR-FIXED METAL-FILM 33R2 +/- 1% 250mW 200V 50 ppm/DEG.C, SURFACE MOUNTED, SIZE MINI-MELF,	VISHAY COMPONENTS	SMM0204-33R2-1%50ppm
R4	24811/161	RESISTOR-FIXED METAL-FILM 332R +/- 1% 250mW 200V 50 ppm/DEG.C, SURFACE MOUNTED, SIZE MINI-MELF,	VISHAY COMPONENTS	SMM0204-332R-1%50ppm
R6	24811/140	RESISTOR-FIXED METAL-FILM 43R2 +/- 1% 250mW 200V 50 ppm/DEG.C, SURFACE MOUNTED, SIZE MINI-MELF,	VISHAY COMPONENTS	SMM0204-43R2-1%50ppm
R7	24811/173	RESISTOR-FIXED METAL-FILM 1K +/- 1% 250mW 200V 50 ppm/DEG.C, SURFACE MOUNTED, SIZE MINI-MELF, (8mm	VISHAY COMPONENTS	SMM0204-1K0-1%-50ppm
R8	24811/217	RESISTOR-FIXED METAL-FILM 68K1 +/- 1% 250mW 200V 50 ppm/DEG.C, SURFACE MOUNTED, SIZE MINI-MELF,	VISHAY COMPONENTS	SMM0204-68K1-1%50ppm
R9	24811/215	RESISTOR-FIXED METAL-FILM 56K2 +/- 1% 250mW 200V 50 ppm/DEG.C, SURFACE MOUNTED, SIZE MINI-MELF,	VISHAY COMPONENTS	SMM0204-56K2-1%50ppm
R10	24811/209	RESISTOR-FIXED METAL-FILM 33K2 +/- 1% 250mW 200V 50 ppm/DEG.C, SURFACE MOUNTED, SIZE MINI-MELF,	VISHAY COMPONENTS	SMM0204-33K2-1%50ppm
R11	24811/233	RESISTOR-FIXED METAL-FILM 332K +/- 1% 250mW 200V 50 ppm/DEG.C, SURFACE MOUNTED, SIZE MINI-MELF,	VISHAY COMPONENTS	SMM0204-332K-1%50ppm
R12	24811/231	RESISTOR-FIXED METAL-FILM 274K +/- 1% 250mW 200V 50 ppm/DEG.C, SURFACE MOUNTED, SIZE MINI-MELF,	VISHAY COMPONENTS	SMM0204-274K-1%50ppm

Cir. Ref.	MI part number	Description	Manufacturer	Manufacturer's part number
Microprocessor board B2/1 (contd.)				
R13	24811/241	RESISTOR-FIXED METAL-FILM 681K +/- 1% 250mW 200V 50 ppm/DEG.C, SURFACE MOUNTED, SIZE MINI-MELF,	VISHAY COMPONENTS	SMM0204-681K-1%50ppm
R14	24811/174	RESISTOR-FIXED METAL-FILM 1K1 +/- 1% 250mW 200V 50 ppm/DEG.C, SURFACE MOUNTED, SIZE MINI-MELF, (8mm	VISHAY COMPONENTS	SMM0204-1K1-1%50ppm
R15	24811/174	RESISTOR-FIXED METAL-FILM 1K1 +/- 1% 250mW 200V 50 ppm/DEG.C, SURFACE MOUNTED, SIZE MINI-MELF, (8mm	VISHAY COMPONENTS	SMM0204-1K1-1%50ppm
R16	24811/197	RESISTOR-FIXED METAL-FILM 10K +/- 1% 250mW 200V 50 ppm/DEG.C, SURFACE MOUNTED, SIZE MINI-MELF, (8mm	VISHAY COMPONENTS	SMM0204-10K-1%50ppm
R17	24811/173	RESISTOR-FIXED METAL-FILM 1K +/- 1% 250mW 200V 50 ppm/DEG.C, SURFACE MOUNTED, SIZE MINI-MELF, (8mm	VISHAY COMPONENTS	SMM0204-1K0-1%-50ppm
R18	24811/209	RESISTOR-FIXED METAL-FILM 33K2 +/- 1% 250mW 200V 50 ppm/DEG.C, SURFACE MOUNTED, SIZE MINI-MELF,	VISHAY COMPONENTS	SMM0204-33K2-1%50ppm
R19	24811/149	RESISTOR-FIXED METAL-FILM 100R +/- 1% 250mW 200V 50 ppm/DEG.C, SURFACE MOUNTED, SIZE MINI-MELF,	VISHAY COMPONENTS	SMM0204-100R-1%50ppm
R20	24811/197	RESISTOR-FIXED METAL-FILM 10K +/- 1% 250mW 200V 50 ppm/DEG.C, SURFACE MOUNTED, SIZE MINI-MELF, (8mm	VISHAY COMPONENTS	SMM0204-10K-1%50ppm
R21	24811/169	RESISTOR-FIXED METAL-FILM 681R +/- 1% 250mW 200V 50 ppm/DEG.C, SURFACE MOUNTED, SIZE MINI-MELF,	VISHAY COMPONENTS	SMM0204-681R-1%50ppm
R22	24811/140	RESISTOR-FIXED METAL-FILM 43R2 +/- 1% 250mW 200V 50 ppm/DEG.C, SURFACE MOUNTED, SIZE MINI-MELF,	VISHAY COMPONENTS	SMM0204-43R2-1%50ppm
R23	24811/172	RESISTOR-FIXED METAL-FILM 909R +/- 1% 250mW 200V 50 ppm/DEG.C, SURFACE MOUNTED, SIZE MINI-MELF,	VISHAY COMPONENTS	SMM0204-909R-1%50ppm
R24	24811/140	RESISTOR-FIXED METAL-FILM 43R2 +/- 1% 250mW 200V 50 ppm/DEG.C, SURFACE MOUNTED, SIZE MINI-MELF,	VISHAY COMPONENTS	SMM0204-43R2-1%50ppm
R25	24811/173	RESISTOR-FIXED METAL-FILM 1K +/- 1% 250mW 200V 50 ppm/DEG.C, SURFACE MOUNTED, SIZE MINI-MELF, (8mm	VISHAY COMPONENTS	SMM0204-1K0-1%-50ppm
R26	24811/173	RESISTOR-FIXED METAL-FILM 1K +/- 1% 250mW 200V 50 ppm/DEG.C, SURFACE MOUNTED, SIZE MINI-MELF, (8mm	VISHAY COMPONENTS	SMM0204-1K0-1%-50ppm
R27	24811/169	RESISTOR-FIXED METAL-FILM 681R +/- 1% 250mW 200V 50 ppm/DEG.C, SURFACE MOUNTED, SIZE MINI-MELF,	VISHAY COMPONENTS	SMM0204-681R-1%50ppm
R28 to R34	24811/157	RESISTOR-FIXED METAL-FILM 221R +/- 1% 250mW 200V 50 ppm/DEG.C, SURFACE MOUNTED, SIZE MINI-MELF,	VISHAY COMPONENTS	SMM0204-221R-1%50ppm
R35	24811/149	RESISTOR-FIXED METAL-FILM 100R +/- 1% 250mW 200V 50 ppm/DEG.C, SURFACE MOUNTED, SIZE MINI-MELF,	VISHAY COMPONENTS	SMM0204-100R-1%50ppm
R36 to R40	24811/197	RESISTOR-FIXED METAL-FILM 10K +/- 1% 250mW 200V 50 ppm/DEG.C, SURFACE MOUNTED, SIZE MINI-MELF, (8mm	VISHAY COMPONENTS	SMM0204-10K-1%50ppm
R41	24811/140	RESISTOR-FIXED METAL-FILM 43R2 +/- 1% 250mW 200V 50 ppm/DEG.C, SURFACE MOUNTED, SIZE MINI-MELF,	VISHAY COMPONENTS	SMM0204-43R2-1%50ppm
R42	24811/169	RESISTOR-FIXED METAL-FILM 681R +/- 1% 250mW 200V 50 ppm/DEG.C, SURFACE MOUNTED, SIZE MINI-MELF,	VISHAY COMPONENTS	SMM0204-681R-1%50ppm
R43	24811/149	RESISTOR-FIXED METAL-FILM 100R +/- 1% 250mW 200V 50 ppm/DEG.C, SURFACE MOUNTED, SIZE MINI-MELF,	VISHAY COMPONENTS	SMM0204-100R-1%50ppm
R44	24811/625	RESISTOR-FIXED METAL-FILM 14K7 +/- 0.1% 250mW 200V 15 ppm/DEG.C, SURFACE MOUNTED, SIZE MINI-MELF,	VISHAY COMPONENTS	SMM0204-14K7-0.1%-15
R45	24811/640	RESISTOR-FIXED METAL-FILM 1K54 +/- 0.1% 250mW 200V 15 ppm/DEG.C, SURFACE MOUNTED, SIZE MINI-MELF,	VISHAY COMPONENTS	SMM0204-1K54-0.1%-15
R46	24811/237	RESISTOR-FIXED METAL-FILM 475K +/- 1% 250mW 200V 50 ppm/DEG.C, SURFACE MOUNTED, SIZE MINI-MELF,	VISHAY COMPONENTS	SMM0204-475K-1%50ppm
R47	24811/197	RESISTOR-FIXED METAL-FILM 10K +/- 1% 250mW 200V 50 ppm/DEG.C, SURFACE MOUNTED, SIZE MINI-MELF, (8mm	VISHAY COMPONENTS	SMM0204-10K-1%50ppm
R48	24811/140	RESISTOR-FIXED METAL-FILM 43R2 +/- 1% 250mW 200V 50 ppm/DEG.C, SURFACE MOUNTED, SIZE MINI-MELF,	VISHAY COMPONENTS	SMM0204-43R2-1%50ppm

Microprocessor board B2/1 (contd.)

Cir. Ref.	MI part number	Description	Manufacturer	Manufacturer's part number
R49	24811/133	RESISTOR-FIXED METAL-FILM 22R1 +/- 1% 250mW 200V 50 ppm/DEG.C, SURFACE MOUNTED, SIZE MINI-MELF,	VISHAY COMPONENTS	SMM0204-22R1-1%50ppm
R50	24811/133	RESISTOR-FIXED METAL-FILM 22R1 +/- 1% 250mW 200V 50 ppm/DEG.C, SURFACE MOUNTED, SIZE MINI-MELF,	VISHAY COMPONENTS	SMM0204-22R1-1%50ppm
R51	24811/205	RESISTOR-FIXED METAL-FILM 22K1 +/- 1% 250mW 200V 50 ppm/DEG.C, SURFACE MOUNTED, SIZE MINI-MELF,	VISHAY COMPONENTS	SMM0204-22K1-1%50ppm
R52	24811/192	RESISTOR-FIXED METAL-FILM 6K19 +/- 1% 250mW 200V 50 ppm/DEG.C, SURFACE MOUNTED, SIZE MINI-MELF,	VISHAY COMPONENTS	SMM0204-6K19-1%50ppm
R53	24811/217	RESISTOR-FIXED METAL-FILM 68K1 +/- 1% 250mW 200V 50 ppm/DEG.C, SURFACE MOUNTED, SIZE MINI-MELF,	VISHAY COMPONENTS	SMM0204-68K1-1%50ppm
R54	24811/217	RESISTOR-FIXED METAL-FILM 68K1 +/- 1% 250mW 200V 50 ppm/DEG.C, SURFACE MOUNTED, SIZE MINI-MELF,	VISHAY COMPONENTS	SMM0204-68K1-1%50ppm
R55	24811/142	RESISTOR-FIXED METAL-FILM 51R1 +/- 1% 250mW 200V 50 ppm/DEG.C, SURFACE MOUNTED, SIZE MINI-MELF,	VISHAY COMPONENTS	SMM0204-51R1-1%50ppm
R56	24811/197	RESISTOR-FIXED METAL-FILM 10K +/- 1% 250mW 200V 50 ppm/DEG.C, SURFACE MOUNTED, SIZE MINI-MELF, (8mm	VISHAY COMPONENTS	SMM0204-10K-1%50ppm
R57	24811/237	RESISTOR-FIXED METAL-FILM 475K +/- 1% 250mW 200V 50 ppm/DEG.C, SURFACE MOUNTED, SIZE MINI-MELF,	VISHAY COMPONENTS	SMM0204-475K-1%50ppm
R58	24811/217	RESISTOR-FIXED METAL-FILM 68K1 +/- 1% 250mW 200V 50 ppm/DEG.C, SURFACE MOUNTED, SIZE MINI-MELF,	VISHAY COMPONENTS	SMM0204-68K1-1%50ppm
R59	24811/217	RESISTOR-FIXED METAL-FILM 68K1 +/- 1% 250mW 200V 50 ppm/DEG.C, SURFACE MOUNTED, SIZE MINI-MELF,	VISHAY COMPONENTS	SMM0204-68K1-1%50ppm
R60	24811/142	RESISTOR-FIXED METAL-FILM 51R1 +/- 1% 250mW 200V 50 ppm/DEG.C, SURFACE MOUNTED, SIZE MINI-MELF,	VISHAY COMPONENTS	SMM0204-51R1-1%50ppm
R61	24811/215	RESISTOR-FIXED METAL-FILM 56K2 +/- 1% 250mW 200V 50 ppm/DEG.C, SURFACE MOUNTED, SIZE MINI-MELF,	VISHAY COMPONENTS	SMM0204-56K2-1%50ppm
R62	24811/197	RESISTOR-FIXED METAL-FILM 10K +/- 1% 250mW 200V 50 ppm/DEG.C, SURFACE MOUNTED, SIZE MINI-MELF, (8mm	VISHAY COMPONENTS	SMM0204-10K-1%50ppm
R63	24811/197	RESISTOR-FIXED METAL-FILM 10K +/- 1% 250mW 200V 50 ppm/DEG.C, SURFACE MOUNTED, SIZE MINI-MELF, (8mm	VISHAY COMPONENTS	SMM0204-10K-1%50ppm
R64	24811/142	RESISTOR-FIXED METAL-FILM 51R1 +/- 1% 250mW 200V 50 ppm/DEG.C, SURFACE MOUNTED, SIZE MINI-MELF,	VISHAY COMPONENTS	SMM0204-51R1-1%50ppm
R65	24811/169	RESISTOR-FIXED METAL-FILM 681R +/- 1% 250mW 200V 50 ppm/DEG.C, SURFACE MOUNTED, SIZE MINI-MELF,	VISHAY COMPONENTS	SMM0204-681R-1%50ppm
R66	24811/140	RESISTOR-FIXED METAL-FILM 43R2 +/- 1% 250mW 200V 50 ppm/DEG.C, SURFACE MOUNTED, SIZE MINI-MELF,	VISHAY COMPONENTS	SMM0204-43R2-1%50ppm
R67 to R70	24811/197	RESISTOR-FIXED METAL-FILM 10K +/- 1% 250mW 200V 50 ppm/DEG.C, SURFACE MOUNTED, SIZE MINI-MELF, (8mm	VISHAY COMPONENTS	SMM0204-10K-1%50ppm
R71	24811/144	RESISTOR-FIXED METAL-FILM 61R9 +/- 1% 250mW 200V 50 ppm/DEG.C, SURFACE MOUNTED, SIZE MINI-MELF,	VISHAY COMPONENTS	SMM0204-61R9-1%50ppm
R72	24811/144	RESISTOR-FIXED METAL-FILM 61R9 +/- 1% 250mW 200V 50 ppm/DEG.C, SURFACE MOUNTED, SIZE MINI-MELF,	VISHAY COMPONENTS	SMM0204-61R9-1%50ppm
R73 to R78	24811/173	RESISTOR-FIXED METAL-FILM 1K +/- 1% 250mW 200V 50 ppm/DEG.C, SURFACE MOUNTED, SIZE MINI-MELF, (8mm	VISHAY COMPONENTS	SMM0204-1K0-1%-50ppm
R79	24811/165	RESISTOR-FIXED METAL-FILM 475R +/- 1% 250mW 200V 50 ppm/DEG.C, SURFACE MOUNTED, SIZE MINI-MELF,	VISHAY COMPONENTS	SMM0204-475R-1%50ppm
R80 to R82	24811/197	RESISTOR-FIXED METAL-FILM 10K +/- 1% 250mW 200V 50 ppm/DEG.C, SURFACE MOUNTED, SIZE MINI-MELF, (8mm	VISHAY COMPONENTS	SMM0204-10K-1%50ppm
R83	24811/237	RESISTOR-FIXED METAL-FILM 475K +/- 1% 250mW 200V 50 ppm/DEG.C, SURFACE MOUNTED, SIZE MINI-MELF,	VISHAY COMPONENTS	SMM0204-475K-1%50ppm
R84	24811/197	RESISTOR-FIXED METAL-FILM 10K +/- 1% 250mW 200V 50 ppm/DEG.C, SURFACE MOUNTED, SIZE MINI-MELF, (8mm	VISHAY COMPONENTS	SMM0204-10K-1%50ppm

Microprocessor board B2/1 (contd.)

Cir. Ref.	MI part number	Description	Manufacturer	Manufacturer's part number
R85	24811/221	RESISTOR-FIXED METAL-FILM 100K +/- 1% 250mW 200V 50 ppm/DEG.C, SURFACE MOUNTED, SIZE MINI-MELF,	VISHAY COMPONENTS	SMM0204-100K-1%50ppm
R86	24811/197	RESISTOR-FIXED METAL-FILM 10K +/- 1% 250mW 200V 50 ppm/DEG.C, SURFACE MOUNTED, SIZE MINI-MELF, (8mm	VISHAY COMPONENTS	SMM0204-10K-1%50ppm
R87	24811/221	RESISTOR-FIXED METAL-FILM 100K +/- 1% 250mW 200V 50 ppm/DEG.C, SURFACE MOUNTED, SIZE MINI-MELF,	VISHAY COMPONENTS	SMM0204-100K-1%50ppm
R88	24811/221	RESISTOR-FIXED METAL-FILM 100K +/- 1% 250mW 200V 50 ppm/DEG.C, SURFACE MOUNTED, SIZE MINI-MELF,	VISHAY COMPONENTS	SMM0204-100K-1%50ppm
R89	24811/229	RESISTOR-FIXED METAL-FILM 221K +/- 1% 250mW 200V 50 ppm/DEG.C, SURFACE MOUNTED, SIZE MINI-MELF,	VISHAY COMPONENTS	SMM0204-221K-1%50ppm
R90	24811/245	RESISTOR-FIXED METAL-FILM 1M +/- 1% 250mW 200V 50 ppm/DEG.C, SURFACE MOUNTED, SIZE MINI-MELF, (8mm	VISHAY COMPONENTS	SMM0204-1M0-1%50ppm
R91	24811/245	RESISTOR-FIXED METAL-FILM 1M +/- 1% 250mW 200V 50 ppm/DEG.C, SURFACE MOUNTED, SIZE MINI-MELF, (8mm	VISHAY COMPONENTS	SMM0204-1M0-1%50ppm
R92	24811/221	RESISTOR-FIXED METAL-FILM 100K +/- 1% 250mW 200V 50 ppm/DEG.C, SURFACE MOUNTED, SIZE MINI-MELF,	VISHAY COMPONENTS	SMM0204-100K-1%50ppm
R93	24811/189	RESISTOR-FIXED METAL-FILM 4K75 +/- 1% 250mW 200V 50 ppm/DEG.C, SURFACE MOUNTED, SIZE MINI-MELF,	VISHAY COMPONENTS	SMM0204-4K75-1%50ppm
R94 to R98	24811/197	RESISTOR-FIXED METAL-FILM 10K +/- 1% 250mW 200V 50 ppm/DEG.C, SURFACE MOUNTED, SIZE MINI-MELF, (8mm	VISHAY COMPONENTS	SMM0204-10K-1%50ppm
R99	24811/229	RESISTOR-FIXED METAL-FILM 221K +/- 1% 250mW 200V 50 ppm/DEG.C, SURFACE MOUNTED, SIZE MINI-MELF,	VISHAY COMPONENTS	SMM0204-221K-1%50ppm
R100	24811/197	RESISTOR-FIXED METAL-FILM 10K +/- 1% 250mW 200V 50 ppm/DEG.C, SURFACE MOUNTED, SIZE MINI-MELF, (8mm	VISHAY COMPONENTS	SMM0204-10K-1%50ppm
R101	24811/193	RESISTOR-FIXED METAL-FILM 6K81 +/- 1% 250mW 200V 50 ppm/DEG.C, SURFACE MOUNTED, SIZE MINI-MELF,	VISHAY COMPONENTS	SMM0204-6K81-1%50ppm
R102	24811/193	RESISTOR-FIXED METAL-FILM 6K81 +/- 1% 250mW 200V 50 ppm/DEG.C, SURFACE MOUNTED, SIZE MINI-MELF,	VISHAY COMPONENTS	SMM0204-6K81-1%50ppm
R103	24811/237	RESISTOR-FIXED METAL-FILM 475K +/- 1% 250mW 200V 50 ppm/DEG.C, SURFACE MOUNTED, SIZE MINI-MELF,	VISHAY COMPONENTS	SMM0204-475K-1%50ppm
R104	24811/237	RESISTOR-FIXED METAL-FILM 475K +/- 1% 250mW 200V 50 ppm/DEG.C, SURFACE MOUNTED, SIZE MINI-MELF,	VISHAY COMPONENTS	SMM0204-475K-1%50ppm
R105	24811/261	RESISTOR-FIXED METAL-FILM 4M75 +/- 1% 250mW 200V 50 ppm/DEG.C, SURFACE MOUNTED, SIZE MINI-MELF,	WELWYN ELECTRONICS	WRM0204-C-4M75-F-P2
R106	24811/197	RESISTOR-FIXED METAL-FILM 10K +/- 1% 250mW 200V 50 ppm/DEG.C, SURFACE MOUNTED, SIZE MINI-MELF, (8mm	VISHAY COMPONENTS	SMM0204-10K-1%50ppm
R107	24811/189	RESISTOR-FIXED METAL-FILM 4K75 +/- 1% 250mW 200V 50 ppm/DEG.C, SURFACE MOUNTED, SIZE MINI-MELF,	VISHAY COMPONENTS	SMM0204-4K75-1%50ppm
R108	24811/189	RESISTOR-FIXED METAL-FILM 4K75 +/- 1% 250mW 200V 50 ppm/DEG.C, SURFACE MOUNTED, SIZE MINI-MELF,	VISHAY COMPONENTS	SMM0204-4K75-1%50ppm
R109	24811/173	RESISTOR-FIXED METAL-FILM 1K +/- 1% 250mW 200V 50 ppm/DEG.C, SURFACE MOUNTED, SIZE MINI-MELF, (8mm	VISHAY COMPONENTS	SMM0204-1K0-1%-50ppm
R110 to R112	24811/197	RESISTOR-FIXED METAL-FILM 10K +/- 1% 250mW 200V 50 ppm/DEG.C, SURFACE MOUNTED, SIZE MINI-MELF, (8mm	VISHAY COMPONENTS	SMM0204-10K-1%50ppm
R113	24811/161	RESISTOR-FIXED METAL-FILM 332R +/- 1% 250mW 200V 50 ppm/DEG.C, SURFACE MOUNTED, SIZE MINI-MELF,	VISHAY COMPONENTS	SMM0204-332R-1%50ppm
R114	24811/209	RESISTOR-FIXED METAL-FILM 33K2 +/- 1% 250mW 200V 50 ppm/DEG.C, SURFACE MOUNTED, SIZE MINI-MELF,	VISHAY COMPONENTS	SMM0204-33K2-1%50ppm
R115	24811/197	RESISTOR-FIXED METAL-FILM 10K +/- 1% 250mW 200V 50 ppm/DEG.C, SURFACE MOUNTED, SIZE MINI-MELF, (8mm	VISHAY COMPONENTS	SMM0204-10K-1%50ppm
R116	24811/221	RESISTOR-FIXED METAL-FILM 100K +/- 1% 250mW 200V 50 ppm/DEG.C, SURFACE MOUNTED, SIZE MINI-MELF,	VISHAY COMPONENTS	SMM0204-100K-1%50ppm

Microprocessor board B2/1 (contd.)

Cir. Ref.	MI part number	Description	Manufacturer	Manufacturer's part number
R117	24811/201	RESISTOR-FIXED METAL-FILM 15K +/- 1% 250mW 200V 50 ppm/DEG.C, SURFACE MOUNTED, SIZE MINI-MELF, (8mm	VISHAY COMPONENTS	SMM0204-15K-1%50ppm
R118	25685/408	THERMISTOR NEGATIVE-TC DISC, 5mm 15K @ 25 DEG.C, 4.7 %/DEG.C +/- 10% 500mW 2.54mm PWP, RADIAL.	PHILIPS	2322-640-63153
R119 to R121	24811/197	RESISTOR-FIXED METAL-FILM 10K +/- 1% 250mW 200V 50 ppm/DEG.C, SURFACE MOUNTED, SIZE MINI-MELF, (8mm	VISHAY COMPONENTS	SMM0204-10K-1%50ppm
R122	24811/169	RESISTOR-FIXED METAL-FILM 681R +/- 1% 250mW 200V 50 ppm/DEG.C, SURFACE MOUNTED, SIZE MINI-MELF,	VISHAY COMPONENTS	SMM0204-681R-1%50ppm
R123 to R125	24811/197	RESISTOR-FIXED METAL-FILM 10K +/- 1% 250mW 200V 50 ppm/DEG.C, SURFACE MOUNTED, SIZE MINI-MELF, (8mm	VISHAY COMPONENTS	SMM0204-10K-1%50ppm
R126	24338/002	RESISTOR-FIXED METAL-GLAZE 100R +/- 5% 1W 100V 350 ppm/DEG.C, SURFACE MOUNTED, SIZE 2512, (12mm	VISHAY COMPONENTS	CR2512-100R-5%-P4
R127	24338/004	RESISTOR-FIXED METAL-GLAZE 150R +/- 5% 1W 100V 350 ppm/DEG.C, SURFACE MOUNTED, SIZE 2512, (12mm	VISHAY COMPONENTS	CR2512-150R-5%-P4
R128	24338/004	RESISTOR-FIXED METAL-GLAZE 150R +/- 5% 1W 100V 350 ppm/DEG.C, SURFACE MOUNTED, SIZE 2512, (12mm	VISHAY COMPONENTS	CR2512-150R-5%-P4
R129	24811/137	RESISTOR-FIXED METAL-FILM 33R2 +/- 1% 250mW 200V 50 ppm/DEG.C, SURFACE MOUNTED, SIZE MINI-MELF,	VISHAY COMPONENTS	SMM0204-33R2-1%50ppm
R130	24811/245	RESISTOR-FIXED METAL-FILM 1M +/- 1% 250mW 200V 50 ppm/DEG.C, SURFACE MOUNTED, SIZE MINI-MELF, (8mm	VISHAY COMPONENTS	SMM0204-1M0-1%50ppm
R131	24811/245	RESISTOR-FIXED METAL-FILM 1M +/- 1% 250mW 200V 50 ppm/DEG.C, SURFACE MOUNTED, SIZE MINI-MELF, (8mm	VISHAY COMPONENTS	SMM0204-1M0-1%50ppm
R132	24811/185	RESISTOR-FIXED METAL-FILM 3K32 +/- 1% 250mW 200V 50 ppm/DEG.C, SURFACE MOUNTED, SIZE MINI-MELF,	VISHAY COMPONENTS	SMM0204-3K32-1%50ppm
R133	24811/173	RESISTOR-FIXED METAL-FILM 1K +/- 1% 250mW 200V 50 ppm/DEG.C, SURFACE MOUNTED, SIZE MINI-MELF, (8mm	VISHAY COMPONENTS	SMM0204-1K0-1%-50ppm
R134 to R136	24811/197	RESISTOR-FIXED METAL-FILM 10K +/- 1% 250mW 200V 50 ppm/DEG.C, SURFACE MOUNTED, SIZE MINI-MELF, (8mm	VISHAY COMPONENTS	SMM0204-10K-1%50ppm
R137	24811/194	RESISTOR-FIXED METAL-FILM 7K5 +/- 1% 250mW 200V 50 ppm/DEG.C, SURFACE MOUNTED, SIZE MINI-MELF, (8mm	VISHAY COMPONENTS	SMM0204-7K5-1%50ppm
R138 to R147	24811/197	RESISTOR-FIXED METAL-FILM 10K +/- 1% 250mW 200V 50 ppm/DEG.C, SURFACE MOUNTED, SIZE MINI-MELF, (8mm	VISHAY COMPONENTS	SMM0204-10K-1%50ppm
R148	24811/173	RESISTOR-FIXED METAL-FILM 1K +/- 1% 250mW 200V 50 ppm/DEG.C, SURFACE MOUNTED, SIZE MINI-MELF, (8mm	VISHAY COMPONENTS	SMM0204-1K0-1%-50ppm
R149 to R161	24811/197	RESISTOR-FIXED METAL-FILM 10K +/- 1% 250mW 200V 50 ppm/DEG.C, SURFACE MOUNTED, SIZE MINI-MELF, (8mm	VISHAY COMPONENTS	SMM0204-10K-1%50ppm
R162	24811/173	RESISTOR-FIXED METAL-FILM 1K +/- 1% 250mW 200V 50 ppm/DEG.C, SURFACE MOUNTED, SIZE MINI-MELF, (8mm	VISHAY COMPONENTS	SMM0204-1K0-1%-50ppm
R163 to R188	24811/197	RESISTOR-FIXED METAL-FILM 10K +/- 1% 250mW 200V 50 ppm/DEG.C, SURFACE MOUNTED, SIZE MINI-MELF, (8mm	VISHAY COMPONENTS	SMM0204-10K-1%50ppm
R189 to R194	24811/189	RESISTOR-FIXED METAL-FILM 4K75 +/- 1% 250mW 200V 50 ppm/DEG.C, SURFACE MOUNTED, SIZE MINI-MELF,	VISHAY COMPONENTS	SMM0204-4K75-1%50ppm
R195	24811/197	RESISTOR-FIXED METAL-FILM 10K +/- 1% 250mW 200V 50 ppm/DEG.C, SURFACE MOUNTED, SIZE MINI-MELF, (8mm	VISHAY COMPONENTS	SMM0204-10K-1%50ppm
R198	24811/197	RESISTOR-FIXED METAL-FILM 10K +/- 1% 250mW 200V 50 ppm/DEG.C, SURFACE MOUNTED, SIZE MINI-MELF, (8mm	VISHAY COMPONENTS	SMM0204-10K-1%50ppm
R199	24811/189	RESISTOR-FIXED METAL-FILM 4K75 +/- 1% 250mW 200V 50 ppm/DEG.C, SURFACE MOUNTED, SIZE MINI-MELF,	VISHAY COMPONENTS	SMM0204-4K75-1%50ppm
R200 to R215	24811/201	RESISTOR-FIXED METAL-FILM 15K +/- 1% 250mW 200V 50 ppm/DEG.C, SURFACE MOUNTED, SIZE MINI-MELF, (8mm	VISHAY COMPONENTS	SMM0204-15K-1%50ppm
R216	24811/174	RESISTOR-FIXED METAL-FILM 1K1 +/- 1% 250mW 200V 50 ppm/DEG.C, SURFACE MOUNTED, SIZE MINI-MELF, (8mm	VISHAY COMPONENTS	SMM0204-1K1-1%50ppm

Microprocessor board B2/1 (contd.)

Cir. Ref.	MI part number	Description	Manufacturer	Manufacturer's part number
R217	[illegible]	RESISTOR-FIXED METAL-FILM 3K32 +/- 1% 250mW 200V 50 ppm/DEG.C, SURFACE MOUNTED, SIZE MINI-MELF,	VISHAY COMPONENTS	SMM0204-3K32-1%50ppm
R218	24811/152	RESISTOR-FIXED METAL-FILM 130R +/- 1% 250mW 200V 50 ppm/DEG.C, SURFACE MOUNTED, SIZE MINI-MELF,	VISHAY COMPONENTS	SMM0204-130R-1%50ppm
R219	24811/185	RESISTOR-FIXED METAL-FILM 3K32 +/- 1% 250mW 200V 50 ppm/DEG.C, SURFACE MOUNTED, SIZE MINI-MELF,	VISHAY COMPONENTS	SMM0204-3K32-1%50ppm
R220	[illegible]	RESISTOR-FIXED METAL-FILM 130R +/- 1% 250mW 200V 50 ppm/DEG.C, SURFACE MOUNTED, SIZE MINI-MELF,	VISHAY COMPONENTS	SMM0204-130R-1%50ppm
R221	[illegible]	RESISTOR-FIXED METAL-FILM 1K1 +/- 1% 250mW 200V 50 ppm/DEG.C, SURFACE MOUNTED, SIZE MINI-MELF, (8mm	VISHAY COMPONENTS	SMM0204-1K1-1%50ppm
R222	[illegible]	RESISTOR-FIXED METAL-FILM 4K75 +/- 1% 250mW 200V 50 ppm/DEG.C, SURFACE MOUNTED, SIZE MINI-MELF,	VISHAY COMPONENTS	SMM0204-4K75-1%50ppm
R223	[illegible]	RESISTOR-FIXED METAL-FILM 22R1 +/- 1% 250mW 200V 50 ppm/DEG.C, SURFACE MOUNTED, SIZE MINI-MELF,	VISHAY COMPONENTS	SMM0204-22R1-1%50ppm
R224	24811/197	RESISTOR-FIXED METAL-FILM 10K +/- 1% 250mW 200V 50 ppm/DEG.C, SURFACE MOUNTED, SIZE MINI-MELF, (8mm	VISHAY COMPONENTS	SMM0204-10K-1%50ppm
R225	24811/197	RESISTOR-FIXED METAL-FILM 10K +/- 1% 250mW 200V 50 ppm/DEG.C, SURFACE MOUNTED, SIZE MINI-MELF, (8mm	VISHAY COMPONENTS	SMM0204-10K-1%50ppm
R226 to R228	24811/173	RESISTOR-FIXED METAL-FILM 1K +/- 1% 250mW 200V 50 ppm/DEG.C, SURFACE MOUNTED, SIZE MINI-MELF, (8mm	VISHAY COMPONENTS	SMM0204-1K0-1%-50ppm
R229	24811/185	RESISTOR-FIXED METAL-FILM 3K32 +/- 1% 250mW 200V 50 ppm/DEG.C, SURFACE MOUNTED, SIZE MINI-MELF,	VISHAY COMPONENTS	SMM0204-3K32-1%50ppm
R230 to R233	24811/189	RESISTOR-FIXED METAL-FILM 4K75 +/- 1% 250mW 200V 50 ppm/DEG.C, SURFACE MOUNTED, SIZE MINI-MELF,	VISHAY COMPONENTS	SMM0204-4K75-1%50ppm
R234	24811/206	RESISTOR-FIXED METAL-FILM 24K3 +/- 1% 250mW 200V 50 ppm/DEG.C, SURFACE MOUNTED, SIZE MINI-MELF,	VISHAY COMPONENTS	SMM0204-24K3-1%50ppm
R235	24811/236	RESISTOR-FIXED METAL-FILM 432K +/- 1% 250mW 200V 50 ppm/DEG.C, SURFACE MOUNTED, SIZE MINI-MELF,	VISHAY COMPONENTS	SMM0204-432K-1%50ppm
R236	24811/241	RESISTOR-FIXED METAL-FILM 681K +/- 1% 250mW 200V 50 ppm/DEG.C, SURFACE MOUNTED, SIZE MINI-MELF,	VISHAY COMPONENTS	SMM0204-681K-1%50ppm
R237	24811/194	RESISTOR-FIXED METAL-FILM 7K5 +/- 1% 250mW 200V 50 ppm/DEG.C, SURFACE MOUNTED, SIZE MINI-MELF, (8mm	VISHAY COMPONENTS	SMM0204-7K5-1%50ppm
R238 to R240	24811/142	RESISTOR-FIXED METAL-FILM 51R1 +/- 1% 250mW 200V 50 ppm/DEG.C, SURFACE MOUNTED, SIZE MINI-MELF,	VISHAY COMPONENTS	SMM0204-51R1-1%50ppm
R241 to R248	24811/197	RESISTOR-FIXED METAL-FILM 10K +/- 1% 250mW 200V 50 ppm/DEG.C, SURFACE MOUNTED, SIZE MINI-MELF, (8mm	VISHAY COMPONENTS	SMM0204-10K-1%50ppm
R249	24811/201	RESISTOR-FIXED METAL-FILM 15K +/- 1% 250mW 200V 50 ppm/DEG.C, SURFACE MOUNTED, SIZE MINI-MELF, (8mm	VISHAY COMPONENTS	SMM0204-15K-1%50ppm
R250	24811/223	RESISTOR-FIXED METAL-FILM 121K +/- 1% 250mW 200V 50 ppm/DEG.C, SURFACE MOUNTED, SIZE MINI-MELF,	VISHAY COMPONENTS	SMM0204-121K-1%50ppm
R251	24811/217	RESISTOR-FIXED METAL-FILM 68K1 +/- 1% 250mW 200V 50 ppm/DEG.C, SURFACE MOUNTED, SIZE MINI-MELF,	VISHAY COMPONENTS	SMM0204-68K1-1%50ppm
R252	24811/137	RESISTOR-FIXED METAL-FILM 33R2 +/- 1% 250mW 200V 50 ppm/DEG.C, SURFACE MOUNTED, SIZE MINI-MELF,	VISHAY COMPONENTS	SMM0204-33R2-1%50ppm
R253	24811/137	RESISTOR-FIXED METAL-FILM 33R2 +/- 1% 250mW 200V 50 ppm/DEG.C, SURFACE MOUNTED, SIZE MINI-MELF,	VISHAY COMPONENTS	SMM0204-33R2-1%50ppm
R254	24811/133	RESISTOR-FIXED METAL-FILM 22R1 +/- 1% 250mW 200V 50 ppm/DEG.C, SURFACE MOUNTED, SIZE MINI-MELF,	VISHAY COMPONENTS	SMM0204-22R1-1%50ppm
R255	24811/133	RESISTOR-FIXED METAL-FILM 22R1 +/- 1% 250mW 200V 50 ppm/DEG.C, SURFACE MOUNTED, SIZE MINI-MELF,	VISHAY COMPONENTS	SMM0204-22R1-1%50ppm
R256 to R258	24811/197	RESISTOR-FIXED METAL-FILM 10K +/- 1% 250mW 200V 50 ppm/DEG.C, SURFACE MOUNTED, SIZE MINI-MELF, (8mm	VISHAY COMPONENTS	SMM0204-10K-1%50ppm

Cir. Ref.	MI part number	Description	Manufacturer	Manufacturer's part number
Microprocessor board B2/1 (contd.)				
SKA	23436/708	CONNECTOR FLEXIBLE CIRCUIT, SOCKET, 14 WAY, RIGHT ANGLED, 1.25mm PITCH, PCB MOUNTING, 2 ROWS OF	MOLEX ELECTRONICS	52044-1410
TP1 to TP30	23435/188	TERMINAL CONNECTOR-PIN, 0.64mm SQUARE, 5.97mm HIGH, PCB-MOUNTING, SINGLE-ENDED, PHOSPHOR BRONZE,	BERG ELECTRONICS	75401-001
TR2	28457/850	TRANSISTOR NPN BIPOLAR FMMT2369... 40V 600MHz 300mW 500mA 40hFE MIN @ 10mA, MARKING CODE *1J,	PHILIPS	PMBT2369
TR3	28457/850	TRANSISTOR NPN BIPOLAR FMMT2369... 40V 600MHz 300mW 500mA 40hFE MIN @ 10mA, MARKING CODE *1J,	PHILIPS	PMBT2369
TR4 to TR17	28487/811	TRANSISTOR NPN BIPOLAR BC818-40... 25V 170MHz 330mW 500mA 250hFE MIN @ 100mA, MARKING CODE 6G,	PHILIPS	BC818-40
TR18	28435/241	TRANSISTOR PNP BIPOLAR BCX17... 45V 100MHz 425mW 500mA 100hFE MIN @ 100mA, MARKING CODE T1, SURFACE	PHILIPS	BCX17
TR19	28435/241	TRANSISTOR PNP BIPOLAR BCX17... 45V 100MHz 425mW 500mA 100hFE MIN @ 100mA, MARKING CODE T1, SURFACE	PHILIPS	BCX17
TR20	28457/850	TRANSISTOR NPN BIPOLAR FMMT2369... 40V 600MHz 300mW 500mA 40hFE MIN @ 10mA, MARKING CODE *1J,	PHILIPS	PMBT2369
TR21	28487/811	TRANSISTOR NPN BIPOLAR BC818-40... 25V 170MHz 330mW 500mA 250hFE MIN @ 100mA, MARKING CODE 6G,	PHILIPS	BC818-40
TR22	28435/241	TRANSISTOR PNP BIPOLAR BCX17... 45V 100MHz 425mW 500mA 100hFE MIN @ 100mA, MARKING CODE T1, SURFACE	PHILIPS	BCX17
TR23 to TR29	28487/811	TRANSISTOR NPN BIPOLAR BC818-40... 25V 170MHz 330mW 500mA 250hFE MIN @ 100mA, MARKING CODE 6G,	PHILIPS	BC818-40
TR30	28457/850	TRANSISTOR NPN BIPOLAR FMMT2369... 40V 600MHz 300mW 500mA 40hFE MIN @ 10mA, MARKING CODE *1J,	PHILIPS	PMBT2369
TR31	28457/850	TRANSISTOR NPN BIPOLAR FMMT2369... 40V 600MHz 300mW 500mA 40hFE MIN @ 10mA, MARKING CODE *1J,	PHILIPS	PMBT2369
TR32	28459/084	TRANSISTOR N-CHANNEL-ENHANCE MOSFET BST82... 80V 300mW 175mA 7R SWITCH ON & OFF <10nS, MARKING CODE	PHILIPS	BST82(TAPE & REEL)
TR33	28459/084	TRANSISTOR N-CHANNEL-ENHANCE MOSFET BST82... 80V 300mW 175mA 7R SWITCH ON & OFF <10nS, MARKING CODE	PHILIPS	BST82(TAPE & REEL)
TR34	28457/850	TRANSISTOR NPN BIPOLAR FMMT2369... 40V 600MHz 300mW 500mA 40hFE MIN @ 10mA, MARKING CODE *1J,	PHILIPS	PMBT2369

Cir. Ref.	MI part number	Description	Manufacturer	Manufacturer's part number

Analogue cellular B3/1

When ordering, prefix circuit reference with B3/1.

	44830-181	Complete unit	Issue B	
C1	26451/009	CAPACITOR-FIXED ALUMINIUM 47uF +/-20% 16V ELECTROLYTIC, SURFACE-MOUNTED, SIZE 6.6 x 6.6mm,	PANASONIC INDUSTRIAL	ECE-V-1CA-470P
C2	26451/010	CAPACITOR-FIXED ALUMINIUM 100uF +/-20% 6.3V ELECTROLYTIC, SURFACE-MOUNTED, SIZE 6.6 x 6.6mm,	PANASONIC INDUSTRIAL	ECE-V-0JA-101P
C3	26451/009	CAPACITOR-FIXED ALUMINIUM 47uF +/-20% 16V ELECTROLYTIC, SURFACE-MOUNTED, SIZE 6.6 x 6.6mm,	PANASONIC INDUSTRIAL	ECE-V-1CA-470P
C4	26451/004	CAPACITOR-FIXED ALUMINIUM 10uF +/-20% 35V ELECTROLYTIC, SURFACE-MOUNTED, SIZE 5.3 x 5.3mm,	RUBYCON CAPACITORS	35-REV-10
C5	26451/004	CAPACITOR-FIXED ALUMINIUM 10uF +/-20% 35V ELECTROLYTIC, SURFACE-MOUNTED, SIZE 5.3 x 5.3mm,	RUBYCON CAPACITORS	35-REV-10
C6 to C9	26386/760	CAPACITOR-FIXED CERAMIC 220nF +/-10% 50V X7R MULTILAYER, SURFACE-MOUNTED, SIZE 1210, NICKEL	PHILIPS	1210-2R-224-K9-BBC
C10	26386/824	CAPACITOR-FIXED CERAMIC 100pF +/-5% 50V NP0 MULTILAYER, SURFACE-MOUNTED, SIZE 0805, NICKEL	ROHM ELECTRONICS LTD	MCH21-5A-101-JP
C11	26386/828	CAPACITOR-FIXED CERAMIC 220pF +/-5% 50V NP0 MULTILAYER, SURFACE-MOUNTED, SIZE 0805, NICKEL	ROHM ELECTRONICS LTD	MCH21-5A-221-JP
C12 to C15	26386/760	CAPACITOR-FIXED CERAMIC 220nF +/-10% 50V X7R MULTILAYER, SURFACE-MOUNTED, SIZE 1210, NICKEL	PHILIPS	1210-2R-224-K9-BBC
C16 to C18	26386/863	CAPACITOR-FIXED CERAMIC 1nF +/-10% 50V X7R/2C1, MULTILAYER, SURFACE-MOUNTED, SIZE 0805, NICKEL	ROHM ELECTRONICS LTD	MCH21-5C-102-KP
C19	26386/760	CAPACITOR-FIXED CERAMIC 220nF +/-10% 50V X7R MULTILAYER, SURFACE-MOUNTED, SIZE 1210, NICKEL	PHILIPS	1210-2R-224-K9-BBC
C20	26386/830	CAPACITOR-FIXED CERAMIC 330pF +/-5% 50V NP0 MULTILAYER, SURFACE-MOUNTED, SIZE 0805, NICKEL	ROHM ELECTRONICS LTD	MCH21-5A-331-JP
C21	26386/863	CAPACITOR-FIXED CERAMIC 1nF +/-10% 50V X7R/2C1, MULTILAYER, SURFACE-MOUNTED, SIZE 0805, NICKEL	ROHM ELECTRONICS LTD	MCH21-5C-102-KP
C22	26386/760	CAPACITOR-FIXED CERAMIC 220nF +/-10% 50V X7R MULTILAYER, SURFACE-MOUNTED, SIZE 1210, NICKEL	PHILIPS	1210-2R-224-K9-BBC
C23	26386/830	CAPACITOR-FIXED CERAMIC 330pF +/-5% 50V NP0 MULTILAYER, SURFACE-MOUNTED, SIZE 0805, NICKEL	ROHM ELECTRONICS LTD	MCH21-5A-331-JP
C50 to C86	26386/875	CAPACITOR-FIXED CERAMIC 10nF +/-10% 50V X7R/2C1, MULTILAYER, SURFACE-MOUNTED, SIZE 0805, NICKEL	ROHM ELECTRONICS LTD	MCH21-5C-103-KP
C87	26343/788	CAPACITOR-FIXED CERAMIC 680pF +/-5% 50V NPO MULTILAYER, SURFACE-MOUNTED, SIZE 0805, NICKEL	ROHM ELECTRONICS LTD	MCH21-5A-681-JP
C88	26451/010	CAPACITOR-FIXED ALUMINIUM 100uF +/-20% 6.3V ELECTROLYTIC, SURFACE-MOUNTED, SIZE 6.6 x 6.6mm,	PANASONIC INDUSTRIAL	ECE-V-0JA-101P
C89	26343/788	CAPACITOR-FIXED CERAMIC 680pF +/-5% 50V NPO MULTILAYER, SURFACE-MOUNTED, SIZE 0805, NICKEL	ROHM ELECTRONICS LTD	MCH21-5A-681-JP
C90 to C93	26386/875	CAPACITOR-FIXED CERAMIC 10nF +/-10% 50V X7R/2C1, MULTILAYER, SURFACE-MOUNTED, SIZE 0805, NICKEL	ROHM ELECTRONICS LTD	MCH21-5C-103-KP
D1 to D10	28349/034	DIODE SMALL-SIGNAL, SCHOTTKY, BAT54... 160mW 30V 100mA MARKING CODE L4p, SURFACE MOUNTED, SOT-23,	PHILIPS	BAT54-T1

Analogue cellular board B3/1 (contd.)

Cir. Ref.	MI part number	Description	Manufacturer	Manufacturer's part number
IC1	28466/122	IC-DIGITAL OR-GATE 74ACT32... 2 INPUT, QUAD, CMOS-ADVANCED+TTL, 14 PIN, SMALL-OUTLINE.	NAT. SEMICONDUCTOR	74ACT32SC
IC2	28462/430	IC-DIGITAL FLIP-FLOP/D-TYPE 74HCT374... 1 INPUT, OCTAL, NON-INVERTING, POS EDGE TRIGGER, TRI-STATE,	PHILIPS	74HCT374D
IC3	28462/136	IC-DIGITAL FLIP-FLOP/D-TYPE 74HCT74... 2 BIT, DUAL, POS EDGE TRIGGER, PLUS SET & CLEAR,	PHILIPS	74HCT74D
IC4	28466/032	IC-DIGITAL AND-GATE 74HC08... 2 INPUT, QUAD, CMOS-H/SPEED, 14 PIN, SMALL-OUTLINE.	PHILIPS	74HC08D
IC5	28462/430	IC-DIGITAL FLIP-FLOP/D-TYPE 74HCT374... 1 INPUT, OCTAL, NON-INVERTING, POS EDGE TRIGGER, TRI-STATE,	PHILIPS	74HCT374D
IC6	28462/136	IC-DIGITAL FLIP-FLOP/D-TYPE 74HCT74... 2 BIT, DUAL, POS EDGE TRIGGER, PLUS SET & CLEAR,	PHILIPS	74HCT74D
IC7	28466/388	IC-DIGITAL NAND-GATE 74HCT10... 3 INPUT, TRIPLE, CMOS-H/SPEED+TTL, 14 PIN, SMALL-OUTLINE.	PHILIPS	74HCT10D
IC8	28469/058	IC-DIGITAL BUFFER/LINE-DRIVER 74HC244... 4 INPUT, 4 BIT, DUAL, NON-INVERTING, TRI-STATE BUS,	PHILIPS	74HC244D
IC9	28466/122	IC-DIGITAL OR-GATE 74ACT32... 2 INPUT, QUAD, CMOS-ADVANCED+TTL, 14 PIN, SMALL-OUTLINE.	NAT. SEMICONDUCTOR	74ACT32SC
IC10	28466/122	IC-DIGITAL OR-GATE 74ACT32... 2 INPUT, QUAD, CMOS-ADVANCED+TTL, 14 PIN, SMALL-OUTLINE.	NAT. SEMICONDUCTOR	74ACT32SC
IC11	28469/066	IC-DIGITAL INVERTER 74ACT04... HEX, CMOS-ADVANCED+TTL, 14 PIN, SMALL-OUTLINE.	NAT. SEMICONDUCTOR	74ACT04SC
IC12	28462/141	IC-DIGITAL FLIP-FLOP/D-TYPE 74HCT377... OCTAL, POS EDGE TRIGGER WITH DATA ENABLE, CMOS-H/SPEED+TTL,	PHILIPS	74HCT377D
IC13	28467/096	IC-MICRO PROCESSOR, 16 BIT, 68000... 10MHz, CHMOS, 68 PIN, PLCC.	SGS-THOMSON	EF68000/FN/10
IC14	44535/305	IC-PROGRAMMED PAL, SET OF 1, 2945, ADDRESS DECODER B3.		
IC15	28466/122	IC-DIGITAL OR-GATE 74ACT32... 2 INPUT, QUAD, CMOS-ADVANCED+TTL, 14 PIN, SMALL-OUTLINE.	NAT. SEMICONDUCTOR	74ACT32SC
IC20	28469/910	IC-MICRO STATIC-RAM, 128K x 8 BIT, M48Z128... 5V +/-5%, 120nS, NON-VOLATILE, WITH INTERNAL LITHIUM	SGS-THOMSON	M48Z128-120PMI
IC21	28469/910	IC-MICRO STATIC-RAM, 128K x 8 BIT, M48Z128... 5V +/-5%, 120nS, NON-VOLATILE, WITH INTERNAL LITHIUM	SGS-THOMSON	M48Z128-120PMI
IC22	44535/306	IC-PROGRAMMED FPGA, SET OF 1, 2945, DSP ARBITRATOR B3.		
IC23 to IC25	28467/108	IC-MICRO DIGIT/SGNL PROCESSR, ADSP2105... 10MHz DIGITAL SIGNAL PROCESSING, 1K PROGRAM & 0.5K DATA	ANALOG DEVICES LTD	ADSP2105KP-40
IC26	28469/546	IC-DIGITAL FILTER DF1700... 16 INPUT, SINGLE, 8 x OVER SAMPLING, STOPBAND ATTEN >110dB, USER SELECT	BURR-BROWN INTERNAT	DF1700P
IC27	28461/780	IC-ANALOGUE VOLTAGE-REGULATOR 79L05AC... 5V 100mA NEGATIVE, LINEAR, 5% REGULATION, MONOLITHIC, 8	NAT. SEMICONDUCTOR	LM79L05ACM
IC28	28461/814	IC-ANALOGUE A/D CONVERTER AD7870... 5V 12 BIT, WITH ON CHIP REFERENCE, TRACK/HOLD AMP AND	ANALOG DEVICES LTD	AD7870LN
IC29	28461/459	IC-ANALOGUE OPERATIONAL AMP TL032... DUAL, 15V U/GAIN BANDWDTH 1.1MHz, OFFSET VOLTAGE 2.0mV, SLEW	TEXAS INSTRUMENTS	TL032CD(TUBE)
IC30	28461/805	IC-ANALOGUE D/A-CONVERTER AD1865... DUAL, 5V 18 BIT, AUDIO, SERIAL INPUT, CO-PHASED OUTPUT, 116dB	ANALOG DEVICES LTD	AD1865N
IC31	28461/459	IC-ANALOGUE OPERATIONAL AMP TL032... DUAL, 15V U/GAIN BANDWDTH 1.1MHz, OFFSET VOLTAGE 2.0mV, SLEW	TEXAS INSTRUMENTS	TL032CD(TUBE)
IC32	28469/756	IC-ANALOGUE MULTIPLEXER 74HC4051... SINGLE, 8 CHANNEL, 3 SELECT INPUTS PLUS ENABLE,	PHILIPS	74HC4051D

Cir. Ref.	MI part number	Description	Manufacturer	Manufacturer's part number
Analogue cellular board B3/1 (contd.)				
IC33	28466/032	IC-DIGITAL AND-GATE 74HC08... 2 INPUT, QUAD, CMOS-H/SPEED, 14 PIN, SMALL-OUTLINE.	PHILIPS	74HC08D
IC34	28465/053	IC-DIGITAL DECODER/DEMULTIPLEX 74HCT138... 3 INPUT, 8 BIT, SINGLE, INVERTING, 3 BIT ADDRESS,	PHILIPS	74HCT138D
IC35	28462/136	IC-DIGITAL FLIP-FLOP/D-TYPE 74HCT74... 2 BIT, DUAL, POS EDGE TRIGGER, PLUS SET & CLEAR,	PHILIPS	74HCT74D
IC36	28469/063	IC-DIGITAL BUFFER/LINE-DRIVER 74HC125... QUAD, TRI-STATE, LOW ENABLE, CMOS-H/SPEED, 14 PIN,	PHILIPS	74HC125D
L1	23642/533	INDUCTOR-FIXED 10uH +/- 5% EPOXY-MOULD, 150mA 2R1 MAX, 30 Q @ 2.52 MHz, 36 MHz SRF, SURFACE MOUNTED,	MEGGITT ELECTRONICS	3612-T-100-J
L2	23642/533	INDUCTOR-FIXED 10uH +/- 5% EPOXY-MOULD, 150mA 2R1 MAX, 30 Q @ 2.52 MHz, 36 MHz SRF, SURFACE MOUNTED,	MEGGITT ELECTRONICS	3612-T-100-J
PL8 to PL9	23435/120	CONNECTOR MULTIWAY, PCB HEADER, 36 WAY, RIGHT ANGLED, 2.54mm PITCH, PINS GOLD PLATED TO CLASS 2,	BERG ELECTRONICS	75168-101-36
R1 to R7	24811/173	RESISTOR-FIXED METAL-FILM 1K +/- 1% 250mW 200V 50 ppm/DEG.C, SURFACE MOUNTED, SIZE MINI-MELF, (8mm	VISHAY COMPONENTS	SMM0204-1K0-1%-50ppm
R8	24811/197	RESISTOR-FIXED METAL-FILM 10K +/- 1% 250mW 200V 50 ppm/DEG.C, SURFACE MOUNTED, SIZE MINI-MELF, (8mm	VISHAY COMPONENTS	SMM0204-10K-1%50ppm
R9	24811/173	RESISTOR-FIXED METAL-FILM 1K +/- 1% 250mW 200V 50 ppm/DEG.C, SURFACE MOUNTED, SIZE MINI-MELF, (8mm	VISHAY COMPONENTS	SMM0204-1K0-1%-50ppm
R10	24811/197	RESISTOR-FIXED METAL-FILM 10K +/- 1% 250mW 200V 50 ppm/DEG.C, SURFACE MOUNTED, SIZE MINI-MELF, (8mm	VISHAY COMPONENTS	SMM0204-10K-1%50ppm
R11	24811/197	RESISTOR-FIXED METAL-FILM 10K +/- 1% 250mW 200V 50 ppm/DEG.C, SURFACE MOUNTED, SIZE MINI-MELF, (8mm	VISHAY COMPONENTS	SMM0204-10K-1%50ppm
R12	24811/173	RESISTOR-FIXED METAL-FILM 1K +/- 1% 250mW 200V 50 ppm/DEG.C, SURFACE MOUNTED, SIZE MINI-MELF, (8mm	VISHAY COMPONENTS	SMM0204-1K0-1%-50ppm
R13 to R18	24811/197	RESISTOR-FIXED METAL-FILM 10K +/- 1% 250mW 200V 50 ppm/DEG.C, SURFACE MOUNTED, SIZE MINI-MELF, (8mm	VISHAY COMPONENTS	SMM0204-10K-1%50ppm
R19	24811/173	RESISTOR-FIXED METAL-FILM 1K +/- 1% 250mW 200V 50 ppm/DEG.C, SURFACE MOUNTED, SIZE MINI-MELF, (8mm	VISHAY-COMPONENTS	SMM0204-1K0-1%-50ppm
R20	24811/149	RESISTOR-FIXED METAL-FILM 100R +/- 1% 250mW 200V 50 ppm/DEG.C, SURFACE MOUNTED, SIZE MINI-MELF,	VISHAY COMPONENTS	SMM0204-100R-1%50ppm
R21	24811/189	RESISTOR-FIXED METAL-FILM 4K75 +/- 1% 250mW 200V 50 ppm/DEG.C, SURFACE MOUNTED, SIZE MINI-MELF,	VISHAY COMPONENTS	SMM0204-4K75-1%50ppm
R22	24811/180	RESISTOR-FIXED METAL-FILM 2K +/- 1% 250mW 200V 50 ppm/DEG.C, SURFACE MOUNTED, SIZE MINI-MELF, (8mm	VISHAY COMPONENTS	SMM0204-2K0-1%50ppm
R23	24811/189	RESISTOR-FIXED METAL-FILM 4K75 +/- 1% 250mW 200V 50 ppm/DEG.C, SURFACE MOUNTED, SIZE MINI-MELF,	VISHAY COMPONENTS	SMM0204-4K75-1%50ppm
R24	24811/173	RESISTOR-FIXED METAL-FILM 1K +/- 1% 250mW 200V 50 ppm/DEG.C, SURFACE MOUNTED, SIZE MINI-MELF, (8mm	VISHAY COMPONENTS	SMM0204-1K0-1%-50ppm
R25	24811/173	RESISTOR-FIXED METAL-FILM 1K +/- 1% 250mW 200V 50 ppm/DEG.C, SURFACE MOUNTED, SIZE MINI-MELF, (8mm	VISHAY COMPONENTS	SMM0204-1K0-1%-50ppm
R26	24811/197	RESISTOR-FIXED METAL-FILM 10K +/- 1% 250mW 200V 50 ppm/DEG.C, SURFACE MOUNTED, SIZE MINI-MELF, (8mm	VISHAY COMPONENTS	SMM0204-10K-1%50ppm
R27	24811/173	RESISTOR-FIXED METAL-FILM 1K +/- 1% 250mW 200V 50 ppm/DEG.C, SURFACE MOUNTED, SIZE MINI-MELF, (8mm	VISHAY COMPONENTS	SMM0204-1K0-1%-50ppm

Analogue cellular board B3/1 (contd.)

Cir. Ref.	MI part number	Description	Manufacturer	Manufacturer's part number
R28	24811/173	RESISTOR-FIXED METAL-FILM 1K +/- 1% 250mW 200V 50 ppm/DEG.C, SURFACE MOUNTED, SIZE MINI-MELF, (8mm	VISHAY COMPONENTS	SMM0204-1K0-1%-50ppm
R29	24811/197	RESISTOR-FIXED METAL-FILM 10K +/- 1% 250mW 200V 50 ppm/DEG.C, SURFACE MOUNTED, SIZE MINI-MELF, (8mm	VISHAY COMPONENTS	SMM0204-10K-1%50ppm
R30	24811/173	RESISTOR-FIXED METAL-FILM 1K +/- 1% 250mW 200V 50 ppm/DEG.C, SURFACE MOUNTED, SIZE MINI-MELF, (8mm	VISHAY COMPONENTS	SMM0204-1K0-1%-50ppm
R31	24811/173	RESISTOR-FIXED METAL-FILM 1K +/- 1% 250mW 200V 50 ppm/DEG.C, SURFACE MOUNTED, SIZE MINI-MELF, (8mm	VISHAY COMPONENTS	SMM0204-1K0-1%-50ppm
R32	24811/197	RESISTOR-FIXED METAL-FILM 10K +/- 1% 250mW 200V 50 ppm/DEG.C, SURFACE MOUNTED, SIZE MINI-MELF, (8mm	VISHAY COMPONENTS	SMM0204-10K-1%50ppm
R33	24811/173	RESISTOR-FIXED METAL-FILM 1K +/- 1% 250mW 200V 50 ppm/DEG.C, SURFACE MOUNTED, SIZE MINI-MELF, (8mm	VISHAY COMPONENTS	SMM0204-1K0-1%-50ppm
R34	24811/173	RESISTOR-FIXED METAL-FILM 1K +/- 1% 250mW 200V 50 ppm/DEG.C, SURFACE MOUNTED, SIZE MINI-MELF, (8mm	VISHAY COMPONENTS	SMM0204-1K0-1%-50ppm
R35	24811/197	RESISTOR-FIXED METAL-FILM 10K +/- 1% 250mW 200V 50 ppm/DEG.C, SURFACE MOUNTED, SIZE MINI-MELF, (8mm	VISHAY COMPONENTS	SMM0204-10K-1%50ppm
R36	24811/197	RESISTOR-FIXED METAL-FILM 10K +/- 1% 250mW 200V 50 ppm/DEG.C, SURFACE MOUNTED, SIZE MINI-MELF, (8mm	VISHAY COMPONENTS	SMM0204-10K-1%50ppm
R37	24811/218	RESISTOR-FIXED METAL-FILM 75K +/- 1% 250mW 200V 50 ppm/DEG.C, SURFACE MOUNTED, SIZE MINI-MELF, (8mm	VISHAY COMPONENTS	SMM0204-75K-1%50ppm
R38 to R42	24811/197	RESISTOR-FIXED METAL-FILM 10K +/- 1% 250mW 200V 50 ppm/DEG.C, SURFACE MOUNTED, SIZE MINI-MELF, (8mm	VISHAY COMPONENTS	SMM0204-10K-1%50ppm
R43 to R48	24811/193	RESISTOR-FIXED METAL-FILM 6K81 +/- 1% 250mW 200V 50 ppm/DEG.C, SURFACE MOUNTED, SIZE MINI-MELF,	VISHAY COMPONENTS	SMM0204-6K81-1%50ppm
R49	24811/197	RESISTOR-FIXED METAL-FILM 10K +/- 1% 250mW 200V 50 ppm/DEG.C, SURFACE MOUNTED, SIZE MINI-MELF, (8mm	VISHAY COMPONENTS	SMM0204-10K-1%50ppm
R50	24811/197	RESISTOR-FIXED METAL-FILM 10K +/- 1% 250mW 200V 50 ppm/DEG.C, SURFACE MOUNTED, SIZE MINI-MELF, (8mm	VISHAY COMPONENTS	SMM0204-10K-1%50ppm
R51 to R54	24811/163	RESISTOR-FIXED METAL-FILM 392R +/- 1% 250mW 200V 50 ppm/DEG.C, SURFACE MOUNTED, SIZE MINI-MELF,	VISHAY COMPONENTS	SMM0204-392R-1%50ppm
R55 to R64	24811/173	RESISTOR-FIXED METAL-FILM 1K +/- 1% 250mW 200V 50 ppm/DEG.C, SURFACE MOUNTED, SIZE MINI-MELF, (8mm	VISHAY COMPONENTS	SMM0204-1K0-1%-50ppm
R65	24811/149	RESISTOR-FIXED METAL-FILM 100R +/- 1% 250mW 200V 50 ppm/DEG.C, SURFACE MOUNTED, SIZE MINI-MELF,	VISHAY COMPONENTS	SMM0204-100R-1%50ppm
R67	24811/184	RESISTOR-FIXED METAL-FILM 3K01 +/- 1% 250mW 200V 50 ppm/DEG.C, SURFACE MOUNTED, SIZE MINI-MELF,	VISHAY COMPONENTS	SMM0204-3K01-1%50ppm
R68	24811/197	RESISTOR-FIXED METAL-FILM 10K +/- 1% 250mW 200V 50 ppm/DEG.C, SURFACE MOUNTED, SIZE MINI-MELF, (8mm	VISHAY COMPONENTS	SMM0204-10K-1%50ppm
R69	24811/202	RESISTOR-FIXED METAL-FILM 16K2 +/- 1% 250mW 200V 50 ppm/DEG.C, SURFACE MOUNTED, SIZE MINI-MELF,	VISHAY COMPONENTS	SMM0204-16K2-1%50ppm
R70 to R77	24811/197	RESISTOR-FIXED METAL-FILM 10K +/- 1% 250mW 200V 50 ppm/DEG.C, SURFACE MOUNTED, SIZE MINI-MELF, (8mm	VISHAY COMPONENTS	SMM0204-10K-1%50ppm
R78	24811/204	RESISTOR-FIXED METAL-FILM 20K +/- 1% 250mW 200V 50 ppm/DEG.C, SURFACE MOUNTED, SIZE MINI-MELF, (8mm	VISHAY COMPONENTS	SMM0204-20K-1%50ppm
TP1 to TP34	23435/188	TERMINAL CONNECTOR-PIN, 0.64mm SQUARE, 5.97mm HIGH, PCB-MOUNTING, SINGLE-ENDED, PHOSPHOR BRONZE,	BERG ELECTRONICS	75401-001
TR1 to TR5	28453/829	TRANSISTOR NPN BIPOLAR BC848B... 30V 200MHz 200mW 100mA 290hFE @ 2mA, NOISE 2dB @ 1KHz, MARKING CODE	PHILIPS	BC848B
X1	28313/874	OSCILLATOR CRYSTAL, 10 MHz +/- 50 ppm, 5V +/-10%, HYBRID, HCMOS COMPATIBLE, 21mm LONG, 12.5mm WIDE,	AEL CRYSTALS LTD	AEL8700BSN-10MHz

Cir. Ref.	MI part number	Description	Manufacturer	Manufacturer's part number

600 Ω interface B4

When ordering, prefix circuit reference with B4.

	44829-972	Complete unit	Issue 4	
C1	26582/421	CAPACITOR-FIXED POLYESTER 4.7uF +/-10% 63V RADIAL, 22.5mm PWP, (LOOSE).	VISHAY COMPONENTS	MKT-1822-547/065
C2	26343/447	CAPACITOR-FIXED CERAMIC 330pF +/-2% 63V N750 SINGLELAYER, RADIAL, 2.5mm PWP, (TAPED).	VISHAY COMPONENTS	ROU-331-GAK-ACR-J
C3	26421/114	CAPACITOR-FIXED ALUMINIUM 22uF +/-20% 25V ELECTROLYTIC, RADIAL, 5mm PWP, (TAPED).	PANASONIC INDUSTRIAL	ECE-A-1E-KA-220-B
C4	26346/120	CAPACITOR-FIXED CERAMIC 10nF +/-20% 50V X7R MULTILAYER, AXIAL, EPOXY COVERED BODY, (TAPED).	PHILIPS	A41C 103K-DRM
IC1	28469/447	IC-DIGITAL DRIVER ULN2803... 8 DARLINGTON ARRAYS, 50V, 500mA, BIPOLAR, 18 PIN, DUAL-IN-LINE.	MOTOROLA INC.	ULN2803A
PLA	23435/188	TERMINAL CONNECTOR-PIN, 0.64mm SQUARE, 5.97mm HIGH, PCB-MOUNTING, SINGLE-ENDED, PHOSPHOR BRONZE,	BERG ELECTRONICS	75401-001
PLPLB	23435/188	TERMINAL CONNECTOR-PIN, 0.64mm SQUARE, 5.97mm HIGH, PCB-MOUNTING, SINGLE-ENDED, PHOSPHOR BRONZE,	BERG ELECTRONICS	75401-001
R1	24753/460	RESISTOR-FIXED METAL-FILM 649R +/- 0.5% 250mW 200V 50 ppm/DEG.C, AXIAL, (LOOSE OR TAPED).	VISHAY COMPONENTS	EE.10-649R-D-T-2
R2	24773/273	RESISTOR-FIXED METAL-FILM 1K +/- 2% 250mW 250V 100 ppm/DEG.C, 1%-1K0-ACCEPTABLE, AXIAL, (TAPED).	VISHAY COMPONENTS	EE.10-1K-G-T-1
R3	24763/788	RESISTOR-FIXED METAL-FILM 60R4 +/- 1% 500mW 250V 100 ppm/DEG.C, AXIAL, (LOOSE OR TAPED).	VISHAY COMPONENTS	EE.125-60R4-F-T-1
R4	24753/405	RESISTOR-FIXED METAL-FILM 6R9 +/- 0.5% 250mW 200V 50 ppm/DEG.C, AXIAL, (LOOSE OR TAPED).	VISHAY COMPONENTS	EE.10-6R9-D-T-2
R5	24773/259	RESISTOR-FIXED METAL-FILM 270R +/- 2% 250mW 250V 100 ppm/DEG.C, 1%-274R-ACCEPTABLE, AXIAL, (TAPED).	VISHAY COMPONENTS	EE.10-270R-G-T-1
R6	24723/389	RESISTOR-FIXED METAL-FILM 250R +/- 0.25% 250mW 200V 50 ppm/DEG.C, AXIAL, (LOOSE OR TAPED).	VISHAY COMPONENTS	EE.10-250R-C-T-2
R7	24773/249	RESISTOR-FIXED METAL-FILM 100R +/- 2% 250mW 250V 100 ppm/DEG.C, 1%-100R-ACCEPTABLE, AXIAL, (TAPED).	VISHAY-COMPONENTS	EE.10-100R-G-T-1
R8	24773/273	RESISTOR-FIXED METAL-FILM 1K +/- 2% 250mW 250V 100 ppm/DEG.C, 1%-1K0-ACCEPTABLE, AXIAL, (TAPED).	VISHAY COMPONENTS	EE.10-1K-G-T-1
RLA to RLE	23486/166	RELAY MAGNETIC, DOUBLE-POLE CHANGEOVER, 12V COIL, 720R - CONTACTS 1A, 125V, MAX LOAD 30W, PCB	FUJITSU LTD	FBR46-N-D012-P
SKA	23444/334	CONNECTOR-RF SMB-TYPE MALE, RECEPTACLE, 50 OHMS, PCB-MOUNTING, NICKEL PLATED BODY.	ITT CANNON (UK)	051-051-0000-C90
T1	23622/902	TRANSFORMER LF MATCHING, AUDIO, 1+1PRI : 2+2SEC TURNS RATIO, FOR 150R, 600R & 2K4 IMPEDANCES,	BELCLERE LTD	EN6244
T2	23622/902	TRANSFORMER LF MATCHING, AUDIO, 1+1PRI : 2+2SEC TURNS RATIO, FOR 150R, 600R & 2K4 IMPEDANCES,	BELCLERE LTD	EN6244

Cir. Ref.	MI part number	Description	Manufacturer	Manufacturer's part number

GPIB interface B7

When ordering, prefix circuit reference with B7.

	44829-991	Complete unit	Issue 1	
C1	26421/112	CAPACITOR-FIXED ALUMINIUM 10uF +/-20% 35V ELECTROLYTIC, RADIAL, 5mm PWP, (TAPED).	PANASONIC INDUSTRIAL	ECE-A-1V-KA-100-B
C2	26346/120	CAPACITOR-FIXED CERAMIC 10nF +/-20% 50V X7R MULTILAYER, AXIAL, EPOXY COVERED BODY, (TAPED).	PHILIPS	A41C 103K-DRM
C3	26346/120	CAPACITOR-FIXED CERAMIC 10nF +/-20% 50V X7R MULTILAYER, AXIAL, EPOXY COVERED BODY, (TAPED).	PHILIPS	A41C 103K-DRM
C4	26346/120	CAPACITOR-FIXED CERAMIC 10nF +/-20% 50V X7R MULTILAYER, AXIAL, EPOXY COVERED BODY, (TAPED).	PHILIPS	A41C 103K-DRM
C5	26346/120	CAPACITOR-FIXED CERAMIC 10nF +/-20% 50V X7R MULTILAYER, AXIAL, EPOXY COVERED BODY, (TAPED).	PHILIPS	A41C 103K-DRM
IC1	28467/025	IC-MICRO CONTROLLER, 7210... INTERFACE BUS TALK/LISTEN/CONTROL, NMOS, 40 PIN, DUAL-IN-LINE.	NEC ELECTRONICS LTD	uPD7210C
IC2	28469/115	IC-DIGITAL TRANSCEIVER 75161... OCTAL, GPIB-CONTROLLER, TTL-SCHOTTKY-L/PWR, 20 PIN,	NAT. SEMICONDUCTOR	DS75161AN
IC3	28469/114	IC-DIGITAL TRANSCEIVER 75160... OCTAL, GPIB DATA, TTL-SCHOTTKY-L/PWR, 20 PIN, DUAL-IN-LINE.	NAT. SEMICONDUCTOR	DS75160AN
IC4	28469/137	IC-DIGITAL INVERTER 74HC04... HEX, CMOS-H/SPEED, 14 PIN, DUAL-IN-LINE.	PHILIPS	74HC04N
PLA	43137/888	RIBBON-LEAD 26 WAY, SOCKET 26 WAY, - PCB TRANSITION 26 WAY, FLAT MULTICOLOUR CABLE, 400mm	MARCONI INSTRUMENTS LTD	
SKA	23435/133	CONNECTOR TYPE-57, SOCKET, 24 WAY, EDGE MOUNTED, PCB MOUNTING, GOLD OVER NICKEL PLATED CONTACTS,	AMP (GB) LTD	552230-1

Cir. Ref.	MI part number	Description	Manufacturer	Manufacturer's part number

Memory card and date/time stamp board B12

When ordering, prefix circuit reference with B12.

	448830-114	Complete unit	Issue 2	
C1	24811/004	CAPACITOR-FIXED ALUMINIUM 10uF +/-20% 35V ELECTROLYTIC, SURFACE-MOUNTED, SIZE 5.3 x 5.3mm,	RUBYCON CAPACITORS	35-REV-10
C2	26386/899	CAPACITOR-FIXED CERAMIC 100nF +/-10% 50V X7R/2C1, MULTILAYER, SURFACE-MOUNTED, SIZE 1206, NICKEL	ROHM ELECTRONICS LTD	MCH31-5C-104-KP
C3 to C11	26386/875	CAPACITOR-FIXED CERAMIC 10nF +/-10% 50V X7R/2C1, MULTILAYER, SURFACE-MOUNTED, SIZE 0805, NICKEL	ROHM ELECTRONICS LTD	MCH21-5C-103-KP
IC1	28465/056	IC-DIGITAL DECODER/DEMULTIPLEX 74HC139... 2 INPUT, 4 BIT, DUAL, INVERTING, 1 BIT ADDRESS,	PHILIPS	74HC139D
IC2 to IC4	28462/151	IC-DIGITAL FLIP-FLOP/D-TYPE 74HC374... 1 INPUT, OCTAL, NON-INVERTING, POS EDGE TRIGGER, TRI-STATE,	PHILIPS	74HC374D
IC5	28469/550	IC-DIGITAL TRANSCEIVER 74HC245... OCTAL, TRI-STATE, NON-INVERTING, BI-DIRECTIONAL,	PHILIPS	74HC245D
IC6	28469/058	IC-DIGITAL BUFFER/LINE-DRIVER 74HC244... 4 INPUT, 4 BIT, DUAL, NON-INVERTING, TRI-STATE BUS,	PHILIPS	74HC244D
IC7	28466/120	IC-DIGITAL OR-GATE 74HC32... 2 INPUT, QUAD, CMOS-H/SPEED, 14 PIN, SMALL-OUTLINE.	PHILIPS	74HC32D
IC8	28466/241	IC-DIGITAL NOR-GATE 74HC02... 2 INPUT, QUAD, CMOS-H/SPEED, 14 PIN, SMALL-OUTLINE.	PHILIPS	74HC02D
IC9	28467/119	IC-MICRO REAL-TIME-CLOCK, DS1287... NON-VOLATILE, WITH INTEGRAL BATTERY & CRYSTAL, WITHOUT RAM CLEAR	SGS-THOMSON	MK48T87B24
PLA	23435/112	CONNECTOR MULTIWAY, PCB HEADER, 36 WAY, RIGHT ANGLED, 2.54mm PITCH, PINS GOLD PLATED TO CLASS 2,	BERG ELECTRONICS	75168-107-36
PLA	23435/120	CONNECTOR MULTIWAY, PCB HEADER, 36 WAY, RIGHT ANGLED, 2.54mm PITCH, PINS GOLD PLATED TO CLASS 2,	BERG ELECTRONICS	75168-101-36
PLB	23436/725	CONNECTOR MULTIWAY, SOCKET, 68 WAY, RIGHT ANGLED, 2-ROW, 2.54mm PITCH, 1.9mm ROW SPACING, FOR MEMORY	ITT CANNON (UK)	DICMJ-68-P-RPC
R1	24811/197	RESISTOR-FIXED METAL-FILM 10K +/- 1% 250mW 200V 50 ppm/DEG.C, SURFACE MOUNTED, SIZE MINI-MELF, (8mm	VISHAY COMPONENTS	SMM0204-10K-1%50ppm
R2	24811/165	RESISTOR-FIXED METAL-FILM 475R +/- 1% 250mW 200V 50 ppm/DEG.C, SURFACE MOUNTED, SIZE MINI-MELF,	VISHAY COMPONENTS	SMM0204-475R-1%50ppm
R3 to R8	24811/197	RESISTOR-FIXED METAL-FILM 10K +/- 1% 250mW 200V 50 ppm/DEG.C, SURFACE MOUNTED, SIZE MINI-MELF, (8mm	VISHAY COMPONENTS	SMM0204-10K-1%50ppm
R9	24681/671	RESISTOR-NETWORK BUSSED, THICK-FILM, 10K 2% 1W 50V 100 ppm/DEG.C, 9 RESISTORS, LOW PROFILE, 10 PIN,	VISHAY COMPONENTS	LC0-001-1002G
R10	24681/675	RESISTOR-NETWORK BUSSED, THICK-FILM, 100K 2% 1W 50V 100 ppm/DEG.C, 9 RESISTORS, LOW PROFILE, 10	VISHAY COMPONENTS	LC0-001-1003G
R11	24681/675	RESISTOR-NETWORK BUSSED, THICK-FILM, 100K 2% 1W 50V 100 ppm/DEG.C, 9 RESISTORS, LOW PROFILE, 10	VISHAY COMPONENTS	LC0-001-1003G
R12	24811/133	RESISTOR-FIXED METAL-FILM 22R1 +/- 1% 250mW 200V 50 ppm/DEG.C, SURFACE MOUNTED, SIZE MINI-MELF,	VTM (UK) LTD	501-0-22R-1%-50ppm

RF generator control C1

When ordering, prefix circuit reference with 1.

Cir. Ref.	MI part number	Description	Manufacturer	Manufacturer's part number
	44830-113	Complete unit		Issue C
C1	26386/832	CAPACITOR-FIXED CERAMIC 470pF +/-5% 50V NPO MULTILAYER, SURFACE-MOUNTED, SIZE 0805, NICKEL	ROHM ELECTRONICS LTD	MCH21-5A-471-JP
C2	26386/777	CAPACITOR-FIXED CERAMIC 47nF +/-20% 63V X7R/2C1, MULTILAYER, SURFACE-MOUNTED, SIZE 1206, NICKEL	PHILIPS	1206-2R-473-K9-BBC
C3 to C5	26386/832	CAPACITOR-FIXED CERAMIC 470pF +/-5% 50V NPO MULTILAYER, SURFACE-MOUNTED, SIZE 0805, NICKEL	ROHM ELECTRONICS LTD	MCH21-5A-471-JP
C6	26386/777	CAPACITOR-FIXED CERAMIC 47nF +/-20% 63V X7R/2C1, MULTILAYER, SURFACE-MOUNTED, SIZE 1206, NICKEL	PHILIPS	1206-2R-473-K9-BBC
C7	26386/832	CAPACITOR-FIXED CERAMIC 470pF +/-5% 50V NPO MULTILAYER, SURFACE-MOUNTED, SIZE 0805, NICKEL	ROHM ELECTRONICS LTD	MCH21-5A-471-JP
C8	26386/832	CAPACITOR-FIXED CERAMIC 470pF +/-5% 50V NPO MULTILAYER, SURFACE-MOUNTED, SIZE 0805, NICKEL	ROHM ELECTRONICS LTD	MCH21-5A-471-JP
C9	26386/777	CAPACITOR-FIXED CERAMIC 47nF +/-20% 63V X7R/2C1, MULTILAYER, SURFACE-MOUNTED, SIZE 1206, NICKEL	PHILIPS	1206-2R-473-K9-BBC
C10	26386/832	CAPACITOR-FIXED CERAMIC 470pF +/-5% 50V NPO MULTILAYER, SURFACE-MOUNTED, SIZE 0805, NICKEL	ROHM ELECTRONICS LTD	MCH21-5A-471-JP
C15	26451/010	CAPACITOR-FIXED ALUMINIUM 100uF +/-20% 6.3V ELECTROLYTIC, SURFACE-MOUNTED, SIZE 6.6 x 6.6mm,	PANASONIC INDUSTRIAL	ECE-V-0JA-101P
C16	26451/010	CAPACITOR-FIXED ALUMINIUM 100uF +/-20% 6.3V ELECTROLYTIC, SURFACE-MOUNTED, SIZE 6.6 x 6.6mm,	PANASONIC INDUSTRIAL	ECE-V-0JA-101P
C17	26386/875	CAPACITOR-FIXED CERAMIC 10nF +/-10% 50V X7R/2C1, MULTILAYER, SURFACE-MOUNTED, SIZE 0805, NICKEL	ROHM ELECTRONICS LTD	MCH21-5C-103-KP
C18	26386/828	CAPACITOR-FIXED CERAMIC 220pF +/-5% 50V NP0 MULTILAYER, SURFACE-MOUNTED, SIZE 0805, NICKEL	ROHM ELECTRONICS LTD	MCH21-5A-221-JP
C19	26386/832	CAPACITOR-FIXED CERAMIC 470pF +/-5% 50V NPO MULTILAYER, SURFACE-MOUNTED, SIZE 0805, NICKEL	ROHM ELECTRONICS LTD	MCH21-5A-471-JP
C20	26386/777	CAPACITOR-FIXED CERAMIC 47nF +/-20% 63V X7R/2C1, MULTILAYER, SURFACE-MOUNTED, SIZE 1206, NICKEL	PHILIPS	1206-2R-473-K9-BBC
C21	26386/777	CAPACITOR-FIXED CERAMIC 47nF +/-20% 63V X7R/2C1, MULTILAYER, SURFACE-MOUNTED, SIZE 1206, NICKEL	PHILIPS	1206-2R-473-K9-BBC
C22	26386/832	CAPACITOR-FIXED CERAMIC 470pF +/-5% 50V NPO MULTILAYER, SURFACE-MOUNTED, SIZE 0805, NICKEL	ROHM ELECTRONICS LTD	MCH21-5A-471-JP
C24	26386/777	CAPACITOR-FIXED CERAMIC 47nF +/-20% 63V X7R/2C1, MULTILAYER, SURFACE-MOUNTED, SIZE 1206, NICKEL	PHILIPS	1206-2R-473-K9-BBC
C34	26421/143	CAPACITOR-FIXED ALUMINIUM 470uF +/-20% 6.3V ELECTROLYTIC, RADIAL, 5mm PWP, (TAPED).	PANASONIC INDUSTRIAL	ECE-A-0J-U-471-B
C35	26386/777	CAPACITOR-FIXED CERAMIC 47nF +/-20% 63V X7R/2C1, MULTILAYER, SURFACE-MOUNTED, SIZE 1206, NICKEL	PHILIPS	1206-2R-473-K9-BBC
C36	26386/832	CAPACITOR-FIXED CERAMIC 470pF +/-5% 50V NPO MULTILAYER, SURFACE-MOUNTED, SIZE 0805, NICKEL	ROHM ELECTRONICS LTD	MCH21-5A-471-JP
C37	26386/832	CAPACITOR-FIXED CERAMIC 470pF +/-5% 50V NPO MULTILAYER, SURFACE-MOUNTED, SIZE 0805, NICKEL	ROHM ELECTRONICS LTD	MCH21-5A-471-JP
C38 to C40	26386/777	CAPACITOR-FIXED CERAMIC 47nF +/-20% 63V X7R/2C1, MULTILAYER, SURFACE-MOUNTED, SIZE 1206, NICKEL	PHILIPS	1206-2R-473-K9-BBC
C45	26386/832	CAPACITOR-FIXED CERAMIC 470pF +/-5% 50V NPO MULTILAYER, SURFACE-MOUNTED, SIZE 0805, NICKEL	ROHM ELECTRONICS LTD	MCH21-5A-471-JP

Cir. Ref	MI part number	Description	Manufacturer	Manufacturer's part number
RF generator control C1 (contd.)				
C46	26386/863	CAPACITOR-FIXED CERAMIC 1nF +/-10% 50V X7R/2C1, MULTILAYER, SURFACE-MOUNTED, SIZE 0805, NICKEL	ROHM ELECTRONICS LTD	MCH21-5C-102-KP
C47	26386/832	CAPACITOR-FIXED CERAMIC 470pF +/-5% 50V NPO MULTILAYER, SURFACE-MOUNTED, SIZE 0805, NICKEL	ROHM ELECTRONICS LTD	MCH21-5A-471-JP
C48	26386/863	CAPACITOR-FIXED CERAMIC 1nF +/-10% 50V X7R/2C1, MULTILAYER, SURFACE-MOUNTED, SIZE 0805, NICKEL	ROHM ELECTRONICS LTD	MCH21-5C-102-KP
C49	26386/863	CAPACITOR-FIXED CERAMIC 1nF +/-10% 50V X7R/2C1, MULTILAYER, SURFACE-MOUNTED, SIZE 0805, NICKEL	ROHM ELECTRONICS LTD	MCH21-5C-102-KP
C50	26386/832	CAPACITOR-FIXED CERAMIC 470pF +/-5% 50V NPO MULTILAYER, SURFACE-MOUNTED, SIZE 0805, NICKEL	ROHM ELECTRONICS LTD	MCH21-5A-471-JP
C51	26386/863	CAPACITOR-FIXED CERAMIC 1nF +/-10% 50V X7R/2C1, MULTILAYER, SURFACE-MOUNTED, SIZE 0805, NICKEL	ROHM ELECTRONICS LTD	MCH21-5C-102-KP
C52, C53	26386/777	CAPACITOR-FIXED CERAMIC 47nF +/-20% 63V X7R/2C1, MULTILAYER, SURFACE-MOUNTED, SIZE 1206, NICKEL	PHILIPS	1206-2R-473-K9-BBC
C54	26386/816	CAPACITOR-FIXED CERAMIC 22pF +/-5% 50V NPO MULTILAYER, SURFACE-MOUNTED, SIZE 0805, NICKEL	ROHM ELECTRONICS LTD	MCH21-5A-220-JP
C55	26451/010	CAPACITOR-FIXED ALUMINIUM 100uF +/-20% 6.3V ELECTROLYTIC, SURFACE-MOUNTED, SIZE 6.6 x 6.6mm,	PANASONIC INDUSTRIAL	ECE-V-0JA-101P
C56	26386/777	CAPACITOR-FIXED CERAMIC 47nF +/-20% 63V X7R/2C1, MULTILAYER, SURFACE-MOUNTED, SIZE 1206, NICKEL	PHILIPS	1206-2R-473-K9-BBC
C57	26386/777	CAPACITOR-FIXED CERAMIC 47nF +/-20% 63V X7R/2C1, MULTILAYER, SURFACE-MOUNTED, SIZE 1206, NICKEL	PHILIPS	1206-2R-473-K9-BBC
C60	26451/009	CAPACITOR-FIXED ALUMINIUM 47uF +/-20% 16V ELECTROLYTIC, SURFACE-MOUNTED, SIZE 6.6 x 6.6mm,	PANASONIC INDUSTRIAL	ECE-V-1CA-470P
C68	26386/777	CAPACITOR-FIXED CERAMIC 47nF +/-20% 63V X7R/2C1, MULTILAYER, SURFACE-MOUNTED, SIZE 1206, NICKEL	PHILIPS	1206-2R-473-K9-BBC
C69	26386/777	CAPACITOR-FIXED CERAMIC 47nF +/-20% 63V X7R/2C1, MULTILAYER, SURFACE-MOUNTED, SIZE 1206, NICKEL	PHILIPS	1206-2R-473-K9-BBC
C70	26451/009	CAPACITOR-FIXED ALUMINIUM 47uF +/-20% 16V ELECTROLYTIC, SURFACE-MOUNTED, SIZE 6.6 x 6.6mm,	PANASONIC INDUSTRIAL	ECE-V-1CA-470P
C71	26386/777	CAPACITOR-FIXED CERAMIC 47nF +/-20% 63V X7R/2C1, MULTILAYER, SURFACE-MOUNTED, SIZE 1206, NICKEL	PHILIPS	1206-2R-473-K9-BBC
C72	26386/777	CAPACITOR-FIXED CERAMIC 47nF +/-20% 63V X7R/2C1, MULTILAYER, SURFACE-MOUNTED, SIZE 1206, NICKEL	PHILIPS	1206-2R-473-K9-BBC
C73	26451/009	CAPACITOR-FIXED ALUMINIUM 47uF +/-20% 16V ELECTROLYTIC, SURFACE-MOUNTED, SIZE 6.6 x 6.6mm,	PANASONIC INDUSTRIAL	ECE-V-1CA-470P
D1	28383/910	DIODE SMALL-SIGNAL, BAS28... DUAL, 330mW 75V 250mA ELECTRICALLY ISOLATED, MARKING CODE A61 OR JT,	PHILIPS	BAS28
D2	28371/412	DIODE ZENER, BZX84-C5V1... 350mW 5.1V 5% 250mA MARKING CODE Z2, SURFACE MOUNTED, SOT-23, (8mm	PHILIPS	BZX84-C5V1
D3	28371/412	DIODE ZENER, BZX84-C5V1... 350mW 5.1V 5% 250mA MARKING CODE Z2, SURFACE MOUNTED, SOT-23, (8mm	PHILIPS	BZX84-C5V1
D4 to D6	28383/910	DIODE SMALL-SIGNAL, BAS28... DUAL, 330mW 75V 250mA ELECTRICALLY ISOLATED, MARKING CODE A61 OR JT,	PHILIPS	BAS28
D7	28349/032	DIODE SMALL-SIGNAL, SCHOTTKY, HSMS-2820... 8V 1pF 340mVf @ 1mA, MARKNG CODE C0, LOW PROFILE, SURFACE	HEWLETT-PACKARD	HSMS-2820-L31
D8	28349/032	DIODE SMALL-SIGNAL, SCHOTTKY, HSMS-2820... 8V 1pF 340mVf @ 1mA, MARKNG CODE C0, LOW PROFILE, SURFACE	HEWLETT-PACKARD	HSMS-2820-L31

Cir. Ref.	MI part number	Description	Manufacturer	Manufacturer's part number
RF generator control C1 (contd.)				
IC1	28461/454	IC-ANALOGUE MICROWAVE-AMP MSA-0786... 4V 22mA GAIN 12.5dB @ 1GHz, 3dB BANDWIDTH DC-2GHz, BIPOLAR, 4	HEWLETT-PACKARD	MSA-0786-TR1
IC2	28469/577	IC-DIGITAL DIVIDER SP4902... DIVIDE BY 2, 2.5GHz, PRESCALER, ECL, 8 PIN, SMALL-OUTLINE.	GEC PLESSEY SEMICOND	SP4902MP8
IC3	28461/454	IC-ANALOGUE MICROWAVE-AMP MSA-0786... 4V 22mA GAIN 12.5dB @ 1GHz, 3dB BANDWIDTH DC-2GHz, BIPOLAR, 4	HEWLETT-PACKARD	MSA-0786-TR1
IC4	28461/510	IC-ANALOGUE OPERATIONAL AMP MC33284... QUAD, JFET INPUT, LOW NOISE, SLEW RATE 8V/uS MIN, GAIN	NAT. SEMICONDUCTOR	LM837M
IC5	28462/638	IC-DIGITAL FLIP-FLOP/D-TYPE 74HC74... 2 BIT, DUAL, POS EDGE TRIGGER, PLUS SET & CLEAR, CMOS-H/SPEED,	PHILIPS	74HC74D
IC6	28462/157	IC-DIGITAL FLIP-FLOP/D-TYPE 74HC377... OCTAL, POS EDGE TRIGGER WITH DATA ENABLE, CMOS-H/SPEED, 20	PHILIPS	74HC377D
IC7	28462/157	IC-DIGITAL FLIP-FLOP/D-TYPE 74HC377... OCTAL, POS EDGE TRIGGER WITH DATA ENABLE, CMOS-H/SPEED, 20	PHILIPS	74HC377D
IC9	28469/621	IC-DIGITAL ARRAY-LOGIC L5A1579... FRACTIONAL N CONTROL CHIP, 28 BIT BINARY, TO MI CUSTOM SPEC,	LSI LOGIC LTD	L5A1579
IC10	28469/568	IC-DIGITAL DIVIDER SP8400... DIVIDE BY 8/9, 1.5GHz PRESCALER, PHASE NOISE < 160dBc/Hz, 3 BIT A & 9	GEC PLESSEY SEMICOND	SP8400-KG-MPES
IC11	28461/768	IC-ANALOGUE VOLTAGE-REFERENCE LM336... SINGLE, 5V 5mA 2% ACCURACY, 300uW, MONOLITHIC, 3 PIN, TO-92.	NAT. SEMICONDUCTOR	LM336BZ-5.0
IC12	28466/414	IC-DIGITAL EXCLUSIVE-OR 74HC86... 2 INPUT, QUAD, CMOS-H/SPEED, 14 PIN, SMALL-OUTLINE.	PHILIPS	74HC86D
L1	23642/519	INDUCTOR-FIXED 0.068uH +/- 5% EPOXY-MOULD, 450mA 0R36 MAX, 27 Q @ 100 MHz, 1K MHz SRF, SURFACE	MEGGITT ELECTRONICS	3612-T-068-J
L2	23642/519	INDUCTOR-FIXED 0.068uH +/- 5% EPOXY-MOULD, 450mA 0R36 MAX, 27 Q @ 100 MHz, 1K MHz SRF, SURFACE	MEGGITT ELECTRONICS	3612-T-068-J
L3	23642/512	INDUCTOR-FIXED 22uH +/- 5% EPOXY-MOULD, 110mA 3R7 MAX, 30 Q @ 2.5 MHz, 25 MHz SRF, SURFACE MOUNTED,	MEGGITT ELECTRONICS	3612-T-220-J
L4	23642/716	INDUCTOR-FIXED 3.3uH +/- 5% EPOXY-MOULD, 260mA 1R2 MAX, 30 Q @ 7.96 MHz, 60 MHz SRF, SURFACE MOUNTED,	MEGGITT ELECTRONICS	3612-T-3R3-J
L5	23642/512	INDUCTOR-FIXED 22uH +/- 5% EPOXY-MOULD, 110mA 3R7 MAX, 30 Q @ 2.5 MHz, 25 MHz SRF, SURFACE MOUNTED,	MEGGITT ELECTRONICS	3612-T-220-J
PLA to PLC	23435/188	TERMINAL CONNECTOR-PIN, 0.64mm SQUARE, 5.97mm HIGH, PCB-MOUNTING, SINGLE-ENDED, PHOSPHOR BRONZE,	BERG ELECTRONICS	75401-001
R1	24811/928	RESISTOR-FIXED METAL-FILM 121R +/- 1% 250mW 200V 50 ppm/DEG.C, LOW-INDUCTANCE, SURFACE MOUNTED,	VISHAY COMPONENTS	SMM0204-HF-121R-1%
R2	24811/909	RESISTOR-FIXED METAL-FILM 51R1 +/- 1% 250mW 200V 50 ppm/DEG.C, LOW-INDUCTANCE, SURFACE MOUNTED,	VISHAY COMPONENTS	SMM0204-HF-51R1-1%
R3	24811/928	RESISTOR-FIXED METAL-FILM 121R +/- 1% 250mW 200V 50 ppm/DEG.C, LOW-INDUCTANCE, SURFACE MOUNTED,	VISHAY COMPONENTS	SMM0204-HF-121R-1%
R4	24811/153	RESISTOR-FIXED METAL-FILM 150R +/- 1% 250mW 200V 50 ppm/DEG.C, SURFACE MOUNTED, SIZE MINI-MELF,	VISHAY COMPONENTS	SMM0204-150R-1%50ppm
R5	24811/153	RESISTOR-FIXED METAL-FILM 150R +/- 1% 250mW 200V 50 ppm/DEG.C, SURFACE MOUNTED, SIZE MINI-MELF,	VISHAY COMPONENTS	SMM0204-150R-1%50ppm
R6	24811/909	RESISTOR-FIXED METAL-FILM 51R1 +/- 1% 250mW 200V 50 ppm/DEG.C, LOW-INDUCTANCE, SURFACE MOUNTED,	VISHAY COMPONENTS	SMM0204-HF-51R1-1%

Cir. Ref	MI part number	Description	Manufacturer	Manufacturer's part number
RF generator control C1 (contd.)				
R7	24811/153	RESISTOR-FIXED METAL-FILM 150R +/- 1% 250mW 200V 50 ppm/DEG.C, SURFACE MOUNTED, SIZE MINI-MELF,	VISHAY COMPONENTS	SMM0204-150R-1%50ppm
R8	24811/153	RESISTOR-FIXED METAL-FILM 150R +/- 1% 250mW 200V 50 ppm/DEG.C, SURFACE MOUNTED, SIZE MINI-MELF,	VISHAY COMPONENTS	SMM0204-150R-1%50ppm
R15	24811/190	RESISTOR-FIXED METAL-FILM 5K11 +/- 1% 250mW 200V 50 ppm/DEG.C, SURFACE MOUNTED, SIZE MINI-MELF,	VISHAY COMPONENTS	SMM0204-5K11-1%50ppm
R16	24811/174	RESISTOR-FIXED METAL-FILM 1K1 +/- 1% 250mW 200V 50 ppm/DEG.C, SURFACE MOUNTED, SIZE MINI-MELF, (8mm	VISHAY COMPONENTS	SMM0204-1K1-1%50ppm
R17	24811/180	RESISTOR-FIXED METAL-FILM 2K +/- 1% 250mW 200V 50 ppm/DEG.C, SURFACE MOUNTED, SIZE MINI-MELF, (8mm	VISHAY COMPONENTS	SMM0204-2K0-1%50ppm
R18	24811/183	RESISTOR-FIXED METAL-FILM 2K74 +/- 1% 250mW 200V 50 ppm/DEG.C, SURFACE MOUNTED, SIZE MINI-MELF,	VISHAY COMPONENTS	SMM0204-2K74-1%50ppm
R19	24811/183	RESISTOR-FIXED METAL-FILM 2K74 +/- 1% 250mW 200V 50 ppm/DEG.C, SURFACE MOUNTED, SIZE MINI-MELF,	VISHAY COMPONENTS	SMM0204-2K74-1%50ppm
R20	24811/173	RESISTOR-FIXED METAL-FILM 1K +/- 1% 250mW 200V 50 ppm/DEG.C, SURFACE MOUNTED, SIZE MINI-MELF, (8mm	VISHAY COMPONENTS	SMM0204-1K0-1%-50ppm
R21	24811/173	RESISTOR-FIXED METAL-FILM 1K +/- 1% 250mW 200V 50 ppm/DEG.C, SURFACE MOUNTED, SIZE MINI-MELF, (8mm	VISHAY COMPONENTS	SMM0204-1K0-1%-50ppm
R22	24811/197	RESISTOR-FIXED METAL-FILM 10K +/- 1% 250mW 200V 50 ppm/DEG.C, SURFACE MOUNTED, SIZE MINI-MELF, (8mm	VISHAY COMPONENTS	SMM0204-10K-1%50ppm
R23	24811/189	RESISTOR-FIXED METAL-FILM 4K75 +/- 1% 250mW 200V 50 ppm/DEG.C, SURFACE MOUNTED, SIZE MINI-MELF,	VISHAY COMPONENTS	SMM0204-4K75-1%50ppm
R24	24811/189	RESISTOR-FIXED METAL-FILM 4K75 +/- 1% 250mW 200V 50 ppm/DEG.C, SURFACE MOUNTED, SIZE MINI-MELF,	VISHAY COMPONENTS	SMM0204-4K75-1%50ppm
R25 to R27	24811/173	RESISTOR-FIXED METAL-FILM 1K +/- 1% 250mW 200V 50 ppm/DEG.C, SURFACE MOUNTED, SIZE MINI-MELF, (8mm	VISHAY COMPONENTS	SMM0204-1K0-1%-50ppm
R30	24811/197	RESISTOR-FIXED METAL-FILM 10K +/- 1% 250mW 200V 50 ppm/DEG.C, SURFACE MOUNTED, SIZE MINI-MELF, (8mm	VISHAY COMPONENTS	SMM0204-10K-1%50ppm
R31	24811/217	RESISTOR-FIXED METAL-FILM 68K1 +/- 1% 250mW 200V 50 ppm/DEG.C, SURFACE MOUNTED, SIZE MINI-MELF,	VISHAY COMPONENTS	SMM0204-68K1-1%50ppm
R33	24681/527	RESISTOR-NETWORK BUSSED, THICK-FILM, 4K7 2% 600mW 25V 200 ppm/DEG.C, 15 RESISTORS, SURFACE MOUNTED,	VISHAY COMPONENTS	SOMC16-01-472-G-TUBE
R36	24811/173	RESISTOR-FIXED METAL-FILM 1K +/- 1% 250mW 200V 50 ppm/DEG.C, SURFACE MOUNTED, SIZE MINI-MELF, (8mm	VISHAY COMPONENTS	SMM0204-1K0-1%-50ppm
R45	24811/909	RESISTOR-FIXED METAL-FILM 51R1 +/- 1% 250mW 200V 50 ppm/DEG.C, LOW-INDUCTANCE, SURFACE MOUNTED,	VISHAY COMPONENTS	SMM0204-HF-51R1-1%
R46 to R48	24811/173	RESISTOR-FIXED METAL-FILM 1K +/- 1% 250mW 200V 50 ppm/DEG.C, SURFACE MOUNTED, SIZE MINI-MELF, (8mm	VISHAY COMPONENTS	SMM0204-1K0-1%-50ppm
R49	24681/536	RESISTOR-NETWORK ISOLATED, THICK-FILM, 1K 2% 600mW 50V 200 ppm/DEG.C, 8 RESISTORS, SURFACE MOUNTED,	VISHAY COMPONENTS	SOMC16-03-102-G-TUBE
R50	24811/173	RESISTOR-FIXED METAL-FILM 1K +/- 1% 250mW 200V 50 ppm/DEG.C, SURFACE MOUNTED, SIZE MINI-MELF, (8mm	VISHAY COMPONENTS	SMM0204-1K0-1%-50ppm
R51	24811/161	RESISTOR-FIXED METAL-FILM 332R +/- 1% 250mW 200V 50 ppm/DEG.C, SURFACE MOUNTED, SIZE MINI-MELF,	VISHAY COMPONENTS	SMM0204-332R-1%50ppm
R52	24811/161	RESISTOR-FIXED METAL-FILM 332R +/- 1% 250mW 200V 50 ppm/DEG.C, SURFACE MOUNTED, SIZE MINI-MELF,	VISHAY COMPONENTS	SMM0204-332R-1%50ppm
R53	24811/909	RESISTOR-FIXED METAL-FILM 51R1 +/- 1% 250mW 200V 50 ppm/DEG.C, LOW-INDUCTANCE, SURFACE MOUNTED,	VISHAY COMPONENTS	SMM0204-HF-51R1-1%
R54	24811/909	RESISTOR-FIXED METAL-FILM 51R1 +/- 1% 250mW 200V 50 ppm/DEG.C, LOW-INDUCTANCE, SURFACE MOUNTED,	VISHAY COMPONENTS	SMM0204-HF-51R1-1%
R55	24811/153	RESISTOR-FIXED METAL-FILM 150R +/- 1% 250mW 200V 50 ppm/DEG.C, SURFACE MOUNTED, SIZE MINI-MELF,	VISHAY COMPONENTS	SMM0204-150R-1%50ppm

Cir. Ref.	MI part number	Description	Manufacturer	Manufacturer's part number
RF generator control C1 (contd.)				
R56	24811/174	RESISTOR-FIXED METAL-FILM 1K1 +/- 1% 250mW 200V 50 ppm/DEG.C, SURFACE MOUNTED, SIZE MINI-MELF, (8mm	VISHAY COMPONENTS	SMM0204-1K1-1%50ppm
R57	24811/161	RESISTOR-FIXED METAL-FILM 332R +/- 1% 250mW 200V 50 ppm/DEG.C, SURFACE MOUNTED, SIZE MINI-MELF,	VISHAY COMPONENTS	SMM0204-332R-1%50ppm
R58	24811/161	RESISTOR-FIXED METAL-FILM 332R +/- 1% 250mW 200V 50 ppm/DEG.C, SURFACE MOUNTED, SIZE MINI-MELF,	VISHAY COMPONENTS	SMM0204-332R-1%50ppm
R59	24811/125	RESISTOR-FIXED METAL-FILM 10R +/- 1% 250mW 200V 50 ppm/DEG.C, SURFACE MOUNTED, SIZE MINI-MELF, (8mm	VISHAY COMPONENTS	SMM0204-10R-1%-50ppm
R60	24811/125	RESISTOR-FIXED METAL-FILM 10R +/- 1% 250mW 200V 50 ppm/DEG.C, SURFACE MOUNTED, SIZE MINI-MELF, (8mm	VISHAY COMPONENTS	SMM0204-10R-1%-50ppm
R61	24811/181	RESISTOR-FIXED METAL-FILM 2K21 +/- 1% 250mW 200V 50 ppm/DEG.C, SURFACE MOUNTED, SIZE MINI-MELF,	VISHAY COMPONENTS	SMM0204-2K21-1%50ppm
R62 to R64	24811/197	RESISTOR-FIXED METAL-FILM 10K +/- 1% 250mW 200V 50 ppm/DEG.C, SURFACE MOUNTED, SIZE MINI-MELF, (8mm	VISHAY COMPONENTS	SMM0204-10K-1%50ppm
TP1 to TP3	23435/188	TERMINAL CONNECTOR-PIN, 0.64mm SQUARE, 5.97mm HIGH, PCB-MOUNTING, SINGLE-ENDED, PHOSPHOR BRONZE,	BERG ELECTRONICS	75401-001
TR1 to TR3	28457/850	TRANSISTOR NPN BIPOLAR FMMT2369... 40V 600MHz 300mW 500mA 40hFE MIN @ 10mA, MARKING CODE *1J,	PHILIPS	PMBT2369
TR4	28457/852	TRANSISTOR PNP BIPOLAR BSR15... 60V 200MHz 300mW 600mA MARKING CODE CH/T7p, SURFACE MOUNTED,	PHILIPS	BSR15
TR5	28453/829	TRANSISTOR NPN BIPOLAR BC848B... 30V 200MHz 200mW 100mA 290hFE @ 2mA, NOISE 2dB @ 1KHz, MARKING CODE	PHILIPS	BC848B

Cir. Ref.	MI part number	Description	Manufacturer	Manufacturer's part number

RF oscillator C2

When ordering, prefix circuit reference with C2.

	44830-104	Complete unit	Issue G	
C1	26421/151	CAPACITOR-FIXED ALUMINIUM 100uF +/-20% 35V ELECTROLYTIC, RADIAL, 5mm PWP, 9mm MAX BODY DIA,	VISHAY COMPONENTS	EKS-00-CC-310-G-C0
C2 to C4	26421/112	CAPACITOR-FIXED ALUMINIUM 10uF +/-20% 35V ELECTROLYTIC, RADIAL, 5mm PWP, (TAPED).	PANASONIC INDUSTRIAL	ECE-A-1V-KA-100-B
C5	26421/152	CAPACITOR-FIXED ALUMINIUM 220uF +/-20% 16V ELECTROLYTIC, RADIAL, 5mm PWP, 9mm MAX BODY DIA,	VISHAY COMPONENTS	EKS-00-CC-322-D-C0
C6	26421/114	CAPACITOR-FIXED ALUMINIUM 22uF +/-20% 25V ELECTROLYTIC, RADIAL, 5mm PWP, (TAPED).	PANASONIC INDUSTRIAL	ECE-A-1E-KA-220-B
C7	26582/432	CAPACITOR-FIXED POLYESTER 1uF +/-10% 50V 330 ppm/DEG.C, RADIAL, 5mm PWP, (TAPED).	VISHAY COMPONENTS	MKT-1826-510/065
C8	26421/112	CAPACITOR-FIXED ALUMINIUM 10uF +/-20% 35V ELECTROLYTIC, RADIAL, 5mm PWP, (TAPED).	PANASONIC INDUSTRIAL	ECE-A-1V-KA-100-B
C9	26421/152	CAPACITOR-FIXED ALUMINIUM 220uF +/-20% 16V ELECTROLYTIC, RADIAL, 5mm PWP, 9mm MAX BODY DIA,	VISHAY COMPONENTS	EKS-00-CC-322-D-C0
C10	26421/114	CAPACITOR-FIXED ALUMINIUM 22uF +/-20% 25V ELECTROLYTIC, RADIAL, 5mm PWP, (TAPED).	PANASONIC INDUSTRIAL	ECE-A-1E-KA-220-B
C11	26421/152	CAPACITOR-FIXED ALUMINIUM 220uF +/-20% 16V ELECTROLYTIC, RADIAL, 5mm PWP, 9mm MAX BODY DIA,	VISHAY COMPONENTS	EKS-00-CC-322-D-C0
C12	26421/114	CAPACITOR-FIXED ALUMINIUM 22uF +/-20% 25V ELECTROLYTIC, RADIAL, 5mm PWP, (TAPED).	PANASONIC INDUSTRIAL	ECE-A-1E-KA-220-B
C13	26582/432	CAPACITOR-FIXED POLYESTER 1uF +/-10% 50V 330 ppm/DEG.C, RADIAL, 5mm PWP, (TAPED).	VISHAY COMPONENTS	MKT-1826-510/065
C14	26421/112	CAPACITOR-FIXED ALUMINIUM 10uF +/-20% 35V ELECTROLYTIC, RADIAL, 5mm PWP, (TAPED).	PANASONIC INDUSTRIAL	ECE-A-1V-KA-100-B
C15	26386/887	CAPACITOR-FIXED CERAMIC 100nF +/-10% 50V X7R/2C1, MULTILAYER, SURFACE-MOUNTED, SIZE 1210, NICKEL	ROHM ELECTRONICS LTD	MCH32-5C-104-KP
C16	26386/887	CAPACITOR-FIXED CERAMIC 100nF +/-10% 50V X7R/2C1, MULTILAYER, SURFACE-MOUNTED, SIZE 1210, NICKEL	ROHM ELECTRONICS LTD	MCH32-5C-104-KP
C17	26582/435	CAPACITOR-FIXED POLYESTER 33nF +/-10% 63V 330 ppm/DEG.C, RADIAL, 5mm PWP, (LOOSE OR TAPED).	VISHAY COMPONENTS	MKT-1817-333/015
C18	26582/435	CAPACITOR-FIXED POLYESTER 33nF +/-10% 63V 330 ppm/DEG.C, RADIAL, 5mm PWP, (LOOSE OR TAPED).	VISHAY COMPONENTS	MKT-1817-333/015
C19	26582/431	CAPACITOR-FIXED POLYESTER 22nF +/-10% 63V 330 ppm/DEG.C, RADIAL, 5mm PWP, (TAPED).	VISHAY COMPONENTS	MKT-1817-322/015
C20	26582/431	CAPACITOR-FIXED POLYESTER 22nF +/-10% 63V 330 pp-/DEG.C, RADIAL, 5mm PWP, (TAPED).	VISHAY COMPONENTS	MKT-1817-322/015
C22	26386/887	CAPACITOR-FIXED CERAMIC 100nF +/-10% 50V X7R/2C1, MULTILAYER, SURFACE-MOUNTED, SIZE 1210, NICKEL	ROHM ELECTRONICS LTD	MCH32-5C-104-KP
C23	26582/439	CAPACITOR-FIXED POLYESTER 680nF +/-10% 50V 330 ppm/DEG.C, RADIAL, 5mm PWP, (TAPED).	VISHAY COMPONENTS	MKT-1826-468/065
C24	26582/439	CAPACITOR-FIXED POLYESTER 680nF +/-10% 50V 330 ppm/DEG.C, RADIAL, 5mm PWP, (TAPED).	VISHAY COMPONENTS	MKT-1826-468/065
C25	26386/887	CAPACITOR-FIXED CERAMIC 100nF +/-10% 50V X7R/2C1, MULTILAYER, SURFACE-MOUNTED, SIZE 1210, NICKEL	ROHM ELECTRONICS LTD	MCH32-5C-104-KP
C26	26386/887	CAPACITOR-FIXED CERAMIC 100nF +/-10% 50V X7R/2C1, MULTILAYER, SURFACE-MOUNTED, SIZE 1210, NICKEL	ROHM ELECTRONICS LTD	MCH32-5C-104-KP

Cir. Ref.	MI part number	Description	Manufacturer	Manufacturer's part number
RF oscillator C2 (contd.)				
C27	26386/898	CAPACITOR-FIXED CERAMIC 5.6pF +/-0.1pF 50V 60 ppm/DEG.C, HIGH-Q, SINGLELAYER, SURFACE-MOUNTED,	AVX LTD	0805-5K5R6-BAW-TR
C28	26386/830	CAPACITOR-FIXED CERAMIC 330pF +/-5% 50V NP0 MULTILAYER, SURFACE-MOUNTED, SIZE 0805, NICKEL	ROHM ELECTRONICS LTD	MCH21-5A-331-JP
C29	26343/767	CAPACITOR-FIXED CERAMIC 10pF +/-5% 50V NPO MULTILAYER, SURFACE-MOUNTED, SIZE 0805, NICKEL	ROHM ELECTRONICS LTD	MCH21-5A-100-DP
C30	26386/830	CAPACITOR-FIXED CERAMIC 330pF +/-5% 50V NP0 MULTILAYER, SURFACE-MOUNTED, SIZE 0805, NICKEL	ROHM ELECTRONICS LTD	MCH21-5A-331-JP
C31	26386/955	CAPACITOR-FIXED CERAMIC 10pF +/-0.25pF 100V 60 ppm/DEG.C, HIGH-Q, SINGLELAYER, SURFACE-MOUNTED,	AVX LTD	0805-1K-100-GAW-TR
C32	26386/830	CAPACITOR-FIXED CERAMIC 330pF +/-5% 50V NP0 MULTILAYER, SURFACE-MOUNTED, SIZE 0805, NICKEL	ROHM ELECTRONICS LTD	MCH21-5A-331-JP
C33	26386/830	CAPACITOR-FIXED CERAMIC 330pF +/-5% 50V NP0 MULTILAYER, SURFACE-MOUNTED, SIZE 0805, NICKEL	ROHM ELECTRONICS LTD	MCH21-5A-331-JP
C34 to C36	26386/887	CAPACITOR-FIXED CERAMIC 100nF +/-10% 50V X7R/2C1, MULTILAYER, SURFACE-MOUNTED, SIZE 1210, NICKEL	ROHM ELECTRONICS LTD	MCH32-5C-104-KP
C37	26386/830	CAPACITOR-FIXED CERAMIC 330pF +/-5% 50V NP0 MULTILAYER, SURFACE-MOUNTED, SIZE 0805, NICKEL	ROHM ELECTRONICS LTD	MCH21-5A-331-JP
C38	26386/887	CAPACITOR-FIXED CERAMIC 100nF +/-10% 50V X7R/2C1, MULTILAYER, SURFACE-MOUNTED, SIZE 1210, NICKEL	ROHM ELECTRONICS LTD	MCH32-5C-104-KP
C39	26386/830	CAPACITOR-FIXED CERAMIC 330pF +/-5% 50V NP0 MULTILAYER, SURFACE-MOUNTED, SIZE 0805, NICKEL	ROHM ELECTRONICS LTD	MCH21-5A-331-JP
C40	26386/830	CAPACITOR-FIXED CERAMIC 330pF +/-5% 50V NP0 MULTILAYER, SURFACE-MOUNTED, SIZE 0805, NICKEL	ROHM ELECTRONICS LTD	MCH21-5A-331-JP
C45	26386/863	CAPACITOR-FIXED CERAMIC 1nF +/-10% 50V X7R/2C1, MULTILAYER, SURFACE-MOUNTED, SIZE 0805, NICKEL	ROHM ELECTRONICS LTD	MCH21-5C-102-KP
C49 to C54	26421/112	CAPACITOR-FIXED ALUMINIUM 10uF +/-20% 35V ELECTROLYTIC, RADIAL, 5mm PWP, (TAPED).	PANASONIC INDUSTRIAL	ECE-A-1V-KA-100-B
C55	26386/875	CAPACITOR-FIXED CERAMIC 10nF +/-10% 50V X7R/2C1, MULTILAYER, SURFACE-MOUNTED, SIZE 0805, NICKEL	ROHM ELECTRONICS LTD	MCH21-5C-103-KP
C56	26386/875	CAPACITOR-FIXED CERAMIC 10nF +/-10% 50V X7R/2C1, MULTILAYER, SURFACE-MOUNTED, SIZE 0805, NICKEL	ROHM ELECTRONICS LTD	MCH21-5C-103-KP
C57 to C59	26386/887	CAPACITOR-FIXED CERAMIC 100nF +/-10% 50V X7R/2C1, MULTILAYER, SURFACE-MOUNTED, SIZE 1210, NICKEL	ROHM ELECTRONICS LTD	MCH32-5C-104-KP
C62 to C65	26386/875	CAPACITOR-FIXED CERAMIC 10nF +/-10% 50V X7R/2C1, MULTILAYER, SURFACE-MOUNTED, SIZE 0805, NICKEL	ROHM ELECTRONICS LTD	MCH21-5C-103-KP
C67	26421/153	CAPACITOR-FIXED ALUMINIUM 470uF +/-20% 6.3V ELECTROLYTIC, RADIAL, 5mm PWP, 9mm MAX BODY DIA,	VISHAY COMPONENTS	EKS-00-CC-347-C-C0
C68	26421/112	CAPACITOR-FIXED ALUMINIUM 10uF +/-20% 35V ELECTROLYTIC, RADIAL, 5mm PWP, (TAPED).	PANASONIC INDUSTRIAL	ECE-A-1V-KA-100-B
C69	26421/152	CAPACITOR-FIXED ALUMINIUM 220uF +/-20% 16V ELECTROLYTIC, RADIAL, 5mm PWP, 9mm MAX BODY DIA,	VISHAY COMPONENTS	EKS-00-CC-322-D-C0
C70	26421/152	CAPACITOR-FIXED ALUMINIUM 220uF +/-20% 16V ELECTROLYTIC, RADIAL, 5mm PWP, 9mm MAX BODY DIA,	VISHAY COMPONENTS	EKS-00-CC-322-D-C0
C71	26386/867	CAPACITOR-FIXED CERAMIC 2.2nF +/-10% 50V X7R/2C1, MULTILAYER, SURFACE-MOUNTED, SIZE 0805, NICKEL	ROHM ELECTRONICS LTD	MCH21-5C-222-KP
C72	26421/152	CAPACITOR-FIXED ALUMINIUM 220uF +/-20% 16V ELECTROLYTIC, RADIAL, 5mm PWP, 9mm MAX BODY DIA,	VISHAY COMPONENTS	EKS-00-CC-322-D-C0
C73	26421/152	CAPACITOR-FIXED ALUMINIUM 220uF +/-20% 16V ELECTROLYTIC, RADIAL, 5mm PWP, 9mm MAX BODY DIA,	VISHAY COMPONENTS	EKS-00-CC-322-D-C0
C74	26386/830	CAPACITOR-FIXED CERAMIC 330pF +/-5% 50V NP0 MULTILAYER, SURFACE-MOUNTED, SIZE 0805, NICKEL	ROHM ELECTRONICS LTD	MCH21-5A-331-JP

Cir. Ref.	MI part number	Description	Manufacturer	Manufacturer's part number
RF oscillator C2 (contd.)				
C83	26386/863	CAPACITOR-FIXED CERAMIC 1nF +/-10% 50V X7R/2C1, MULTILAYER, SURFACE-MOUNTED, SIZE 0805, NICKEL	ROHM ELECTRONICS LTD	MCH21-5C-102-KP
C84	26582/440	CAPACITOR-FIXED POLYESTER 4.7nF +/-10% 63V 330 ppm/DEG.C, RADIAL, 5mm PWP, (LOOSE OR TAPED).	DUBILIER CAPACITORS	MMP-4.7nF-K-63V
C85	26582/440	CAPACITOR-FIXED POLYESTER 4.7nF +/-10% 63V 330 ppm/DEG.C, RADIAL, 5mm PWP, (LOOSE OR TAPED).	DUBILIER CAPACITORS	MMP-4.7nF-K-63V
C100 to C102	26386/824	CAPACITOR-FIXED CERAMIC 100pF +/-5% 50V NP0 MULTILAYER, SURFACE-MOUNTED, SIZE 0805, NICKEL	ROHM ELECTRONICS LTD	MCH21-5A-101-JP
C103	26386/887	CAPACITOR-FIXED CERAMIC 100nF +/-10% 50V X7R/2C1, MULTILAYER, SURFACE-MOUNTED, SIZE 1210, NICKEL	ROHM ELECTRONICS LTD	MCH32-5C-104-KP
C104	26386/887	CAPACITOR-FIXED CERAMIC 100nF +/-10% 50V X7R/2C1, MULTILAYER, SURFACE-MOUNTED, SIZE 1210, NICKEL	ROHM ELECTRONICS LTD	MCH32-5C-104-KP
C120	26386/875	CAPACITOR-FIXED CERAMIC 10nF +/-10% 50V X7R/2C1, MULTILAYER, SURFACE-MOUNTED, SIZE 0805, NICKEL	ROHM ELECTRONICS LTD	MCH21-5C-103-KP
C121	26386/875	CAPACITOR-FIXED CERAMIC 10nF +/-10% 50V X7R/2C1, MULTILAYER, SURFACE-MOUNTED, SIZE 0805, NICKEL	ROHM ELECTRONICS LTD	MCH21-5C-103-KP
C122	26386/887	CAPACITOR-FIXED CERAMIC 100nF +/-10% 50V X7R/2C1, MULTILAYER, SURFACE-MOUNTED, SIZE 1210, NICKEL	ROHM ELECTRONICS LTD	MCH32-5C-104-KP
C123	26386/887	CAPACITOR-FIXED CERAMIC 100nF +/-10% 50V X7R/2C1, MULTILAYER, SURFACE-MOUNTED, SIZE 1210, NICKEL	ROHM ELECTRONICS LTD	MCH32-5C-104-KP
C124	26343/767	CAPACITOR-FIXED CERAMIC 10pF +/-5% 50V NPO MULTILAYER, SURFACE-MOUNTED, SIZE 0805, NICKEL	ROHM ELECTRONICS LTD	MCH21-5A-100-DP
C125	26421/118	CAPACITOR-FIXED ALUMINIUM 100uF +/-20% 6.3V ELECTROLYTIC, RADIAL, 5mm PWP, (TAPED).	PANASONIC INDUSTRIAL	ECE-A-0J-KA-101-B
D1	28383/930	DIODE SMALL-SIGNAL, BAS16... 330mW 75V 250mA 2pF 1V/ @ 50mA, MARKING CODE A6, SURFACE MOUNTED,	PHILIPS	BAS16
D2	28371/443	DIODE ZENER, BZX84-C5V6... 350mW 5.6V 5% 250mA MARKING CODE Z3, SURFACE MOUNTED, SOT-23, (8mm	PHILIPS	BZX84-C5V6
D3 to D5	28383/930	DIODE SMALL-SIGNAL, BAS16... 330mW 75V 250mA 2pF 1V/ @ 50mA, MARKING CODE A6, SURFACE MOUNTED,	PHILIPS	BAS16
D6	28371/443	DIODE ZENER, BZX84-C5V6... 350mW 5.6V 5% 250mA MARKING CODE Z3, SURFACE MOUNTED, SOT-23, (8mm	PHILIPS	BZX84-C5V6
D7	28383/930	DIODE SMALL-SIGNAL, BAS16... 330mW 75V 250mA 2pF 1V/ @ 50mA, MARKING CODE A6, SURFACE MOUNTED,	PHILIPS	BAS16
D8	28383/930	DIODE SMALL-SIGNAL, BAS16... 330mW 75V 250mA 2pF 1V/ @ 50mA, MARKING CODE A6, SURFACE MOUNTED,	PHILIPS	BAS16
D9	28381/133	DIODE VARIABLE CAPACITNCE, BB515... 30V 20mA 2.1pF @ 28V, CAPAC RATIO 8.0 MIN, SURFACE MOUNTED,	SIEMENS LTD	BB515-B
D10	28383/931	DIODE PIN, BAR14-1... DUAL, 140mW 100V 100mA 0.5pF 1.25V/ @ 100mA, IN SERIES, MARKING CODE L7,	SIEMENS LTD	BAR14-1-E6327
D13	28371/443	DIODE ZENER, BZX84-C5V6... 350mW 5.6V 5% 250mA MARKING CODE Z3, SURFACE MOUNTED, SOT-23, (8mm	PHILIPS	BZX84-C5V6
D14	28371/443	DIODE ZENER, BZX84-C5V6... 350mW 5.6V 5% 250mA MARKING CODE Z3, SURFACE MOUNTED, SOT-23, (8mm	PHILIPS	BZX84-C5V6
IC1	28461/741	IC-ANALOGUE VOLTAGE-REGULATOR LM317L... 37V 100mA POSITIVE ADJUSTABLE, LINEAR, MONOLITHIC, 3 PIN,	NAT. SEMICONDUCTOR	LM317LZ
IC2	28461/412	IC-ANALOGUE OPERATIONAL AMP TL072... DUAL, 18V UNITY GAIN BNDWDTH 3MHz, OFFSET VOLTAGE 10mV, SLEW	MOTOROLA INC.	TL072CD
IC3	28462/638	IC-DIGITAL FLIP-FLOP/D-TYPE 74HC74... 2 BIT, DUAL, POS EDGE TRIGGER, PLUS SET & CLEAR, CMOS-H/SPEED,	PHILIPS	74HC74D

Cir. Ref.	MI part number	Description	Manufacturer	Manufacturer's part number
RF oscillator C2 (contd.)				
IC4	28462/638	IC-DIGITAL FLIP-FLOP/D-TYPE 74HC74... 2 BIT, DUAL, POS EDGE TRIGGER, PLUS SET & CLEAR, CMOS-H/SPEED,	PHILIPS	74HC74D
IC5	28466/390	IC-DIGITAL NAND-GATE 74HC00... 2 INPUT, QUAD, CMOS-H/SPEED, 14 PIN, SMALL-OUTLINE.	PHILIPS	74HC00D
IC6	28461/999	IC-ANALOGUE SWITCH DG441... QUAD, 15V SPST, ON-RESISTANCE<85R, 4 x N/O @ LOGIC 1, TTL	TEMIC UK LTD	DG441DY
IC7	28461/450	IC-ANALOGUE MICROWAVE-AMP MSA-0486... 5.25V 50mA GAIN 8dB @ 1GHz, 3dB BANDWIDTH DC-3.2GHz, BIPOLAR,	HEWLETT-PACKARD	MSA-0486-TR1
IC8	28461/454	IC-ANALOGUE MICROWAVE-AMP MSA-0786... 4V 22mA GAIN 12.5dB @ 1GHz, 3dB BANDWIDTH DC-2GHz, BIPOLAR, 4	HEWLETT-PACKARD	MSA-0786-TR1
IC15	28461/897	IC-ANALOGUE OPERATIONAL AMP OP-27GS... 22V LOW NOISE, 8 PIN, SMALL-OUTLINE.	ANALOG DEVICES LTD	OP-27GS
IC16	28461/896	IC-ANALOGUE SWITCH DG413... QUAD, 15V SPST, ON-RESISTANCE<35R, 2 x N/O & 2 x N/C @ LOGIC 1,	TEMIC UK LTD	DG413DY
IC17	28461/896	IC-ANALOGUE SWITCH DG413... QUAD, 15V SPST, ON-RESISTANCE<35R, 2 x N/O & 2 x N/C @ LOGIC 1,	TEMIC UK LTD	DG413DY
IC18	28461/897	IC-ANALOGUE OPERATIONAL AMP OP-27GS... 22V LOW NOISE, 8 PIN, SMALL-OUTLINE.	ANALOG DEVICES LTD	OP-27GS
IC19	28461/897	IC-ANALOGUE OPERATIONAL AMP OP-27GS... 22V LOW NOISE, 8 PIN, SMALL-OUTLINE.	ANALOG DEVICES LTD	OP-27GS
IC20	28462/638	IC-DIGITAL FLIP-FLOP/D-TYPE 74HC74... 2 BIT, DUAL, POS EDGE TRIGGER, PLUS SET & CLEAR, CMOS-H/SPEED,	PHILIPS	74HC74D
IC21	28466/032	IC-DIGITAL AND-GATE 74HC08... 2 INPUT, QUAD, CMOS-H/SPEED, 14 PIN, SMALL-OUTLINE.	PHILIPS	74HC08D
L1 to L4	23642/333	INDUCTOR-FIXED 470uH +/- 10% SCREENED, EPOXY-MOULD, 310mA 3R3 MAX, 90 Q @ 0.79 MHz, 3 MHz	VISHAY COMPONENTS	VL471K
L5	23642/362	INDUCTOR-FIXED 10mH +/- 10% SCREENED, EPOXY-MOULD, 69mA 75R MAX, 70 Q @ 0.25 MHz, 0.7 MHz SRF,	VISHAY COMPONENTS	VL103K
L6	23642/362	INDUCTOR-FIXED 10mH +/- 10% SCREENED, EPOXY-MOULD, 69mA 75R MAX, 70 Q @ 0.25 MHz, 0.7 MHz SRF,	VISHAY COMPONENTS	VL103K
L8 to L15	23642/518	INDUCTOR-FIXED 0.56uH +/- 20% EPOXY-MOULD, 450mA 0R55 MAX, 30 Q @ 25.2 MHz, 180 MHz SRF, SURFACE	MEGGITT ELECTRONICS	3612-T-R56-M
PLA to PLJ	23435/188	TERMINAL CONNECTOR-PIN, 0.64mm SQUARE, 5.97mm HIGH, PCB-MOUNTING, SINGLE-ENDED, PHOSPHOR BRONZE,	BERG ELECTRONICS	75401-001
R1	24811/158	RESISTOR-FIXED METAL-FILM 243R +/- 1% 250mW 200V 50 ppm/DEG.C, SURFACE MOUNTED, SIZE MINI-MELF,	VISHAY COMPONENTS	SMM0204-243R-1%50ppm
R2	24811/189	RESISTOR-FIXED METAL-FILM 4K75 +/- 1% 250mW 200V 50 ppm/DEG.C, SURFACE MOUNTED, SIZE MINI-MELF,	VISHAY COMPONENTS	SMM0204-4K75-1%50ppm
R3	24811/125	RESISTOR-FIXED METAL-FILM 10R +/- 1% 250mW 200V 50 ppm/DEG.C, SURFACE MOUNTED, SIZE MINI-MELF, (8mm	VISHAY COMPONENTS	SMM0204-10R-1%-50ppm
R4	24811/223	RESISTOR-FIXED METAL-FILM 121K +/- 1% 250mW 200V 50 ppm/DEG.C, SURFACE MOUNTED, SIZE MINI-MELF,	VISHAY COMPONENTS	SMM0204-121K-1%50ppm
R5	24811/213	RESISTOR-FIXED METAL-FILM 47K5 +/- 1% 250mW 200V 50 ppm/DEG.C, SURFACE MOUNTED, SIZE MINI-MELF,	VISHAY COMPONENTS	SMM0204-47K5-1%50ppm
R6	24811/245	RESISTOR-FIXED METAL-FILM 1M +/- 1% 250mW 200V 50 ppm/DEG.C, SURFACE MOUNTED, SIZE MINI-MELF, (8mm	VISHAY COMPONENTS	SMM0204-1M0-1%50ppm

Cir Ref.	MI part number	Description	Manufacturer	Manufacturer's part number
RF oscillator C2 (contd.)				
R7	248**1175	RESISTOR-FIXED METAL-FILM 1K21 +/- 1% 250mW 200V 50 ppm/DEG.C. SURFACE MOUNTED. SIZE MINI-MELF.	VISHAY COMPONENTS	SMM0204-1K21-1%50ppm
R8	248**1149	RESISTOR-FIXED METAL-FILM 100R +/- 1% 250mW 200V 50 ppm/DEG.C. SURFACE MOUNTED. SIZE MINI-MELF.	VISHAY COMPONENTS	SMM0204-100R-1%50ppm
R9	248**1157	RESISTOR-FIXED METAL-FILM 221R +/- 1% 250mW 200V 50 ppm/DEG.C. SURFACE MOUNTED. SIZE MINI-MELF.	VISHAY COMPONENTS	SMM0204-221R-1%50ppm
R10	248**1213	RESISTOR-FIXED METAL-FILM 47K5 +/- 1% 250mW 200V 50 ppm/DEG.C. SURFACE MOUNTED. SIZE MINI-MELF.	VISHAY COMPONENTS	SMM0204-47K5-1%50ppm
R11	248**1220	RESISTOR-FIXED METAL-FILM 121K +/- 1% 250mW 200V 50 ppm/DEG.C. SURFACE MOUNTED. SIZE MINI-MELF.	VISHAY COMPONENTS	SMM0204-121K-1%50ppm
R12	248**1134	RESISTOR-FIXED METAL-FILM 24R9 +/- 1% 250mW 200V 50 ppm/DEG.C. SURFACE MOUNTED. SIZE MINI-MELF.	VISHAY COMPONENTS	SMM0204-24R9-1%50ppm
R13	248**1246	RESISTOR-FIXED METAL-FILM 1M +/- 1% 250mW 200V 50 ppm/DEG.C. SURFACE MOUNTED. SIZE MINI-MELF. (8mm	VISHAY COMPONENTS	SMM0204-1M0-1%50ppm
R14	248**1175	RESISTOR-FIXED METAL-FILM 1K21 +/- 1% 250mW 200V 50 ppm/DEG.C. SURFACE MOUNTED. SIZE MINI-MELF.	VISHAY COMPONENTS	SMM0204-1K21-1%50ppm
R15	248**1149	RESISTOR-FIXED METAL-FILM 100R +/- 1% 250mW 200V 50 ppm/DEG.C. SURFACE MOUNTED. SIZE MINI-MELF.	VISHAY COMPONENTS	SMM0204-100R-1%50ppm
R16	248**1177	RESISTOR-FIXED METAL-FILM 825R +/- 1% 250mW 200V 50 ppm/DEG.C. SURFACE MOUNTED. SIZE MINI-MELF.	VISHAY COMPONENTS	SMM0204-825R-1%50ppm
R17 to R19	248**1181	RESISTOR-FIXED METAL-FILM 2K2* +/- 1% 250mW 200V 50 ppm/DEG.C. SURFACE MOUNTED. SIZE MINI-MELF.	VISHAY COMPONENTS	SMM0204-2K21-1%50ppm
R20	248**1149	RESISTOR-FIXED METAL-FILM 100R +/- 1% 250mW 200V 50 ppm/DEG.C. SURFACE MOUNTED. SIZE MINI-MELF.	VISHAY COMPONENTS	SMM0204-100R-1%50ppm
R21	248**1149	RESISTOR-FIXED METAL-FILM 100R +/- 1% 250mW 200V 50 ppm/DEG.C. SURFACE MOUNTED. SIZE MINI-MELF.	VISHAY COMPONENTS	SMM0204-100R-1%50ppm
R22	248**1172	RESISTOR-FIXED METAL-FILM 909R +/- 1% 250mW 200V 50 ppm/DEG.C. SURFACE MOUNTED. SIZE MINI-MELF.	VISHAY COMPONENTS	SMM0204-909R-1%50ppm
R23	248**1181	RESISTOR-FIXED METAL-FILM 2K21 +/- 1% 250mW 200V 50 ppm/DEG.C. SURFACE MOUNTED. SIZE MINI-MELF.	VISHAY COMPONENTS	SMM0204-2K21-1%50ppm
R24	248**1149	RESISTOR-FIXED METAL-FILM 100R +/- 1% 250mW 200V 50 ppm/DEG.C. SURFACE MOUNTED. SIZE MINI-MELF.	VISHAY COMPONENTS	SMM0204-100R-1%50ppm
R25	248**1149	RESISTOR-FIXED METAL-FILM 100R +/- 1% 250mW 200V 50 ppm/DEG.C. SURFACE MOUNTED. SIZE MINI-MELF.	VISHAY COMPONENTS	SMM0204-100R-1%50ppm
R26	248**1172	RESISTOR-FIXED METAL-FILM 750R +/- 1% 250mW 200V 50 ppm/DEG.C. SURFACE MOUNTED. SIZE MINI-MELF.	VISHAY COMPONENTS	SMM0204-750R-1%50ppm
R27	248**1149	RESISTOR-FIXED METAL-FILM 100R +/- 1% 250mW 200V 50 ppm/DEG.C. SURFACE MOUNTED. SIZE MINI-MELF.	VISHAY COMPONENTS	SMM0204-100R-1%50ppm
R28	248**1149	RESISTOR-FIXED METAL-FILM 100R +/- 1% 250mW 200V 50 ppm/DEG.C. SURFACE MOUNTED. SIZE MINI-MELF.	VISHAY COMPONENTS	SMM0204-100R-1%50ppm
R29	248**1172	RESISTOR-FIXED METAL-FILM 750R +/- 1% 250mW 200V 50 ppm/DEG.C. SURFACE MOUNTED. SIZE MINI-MELF.	VISHAY COMPONENTS	SMM0204-750R-1%50ppm
R30	248**1177	RESISTOR-FIXED METAL-FILM 1K5 +/- 1% 250mW 200V 50 ppm/DEG.C. SURFACE MOUNTED. SIZE MINI-MELF. (8mm	VISHAY COMPONENTS	SMM0204-1K5-1%50ppm
R31	248**1177	RESISTOR-FIXED METAL-FILM 1K5 +/- 1% 250mW 200V 50 ppm/DEG.C. SURFACE MOUNTED. SIZE MINI-MELF. (8mm	VISHAY COMPONENTS	SMM0204-1K5-1%50ppm
R32	248**1195	RESISTOR-FIXED METAL-FILM 3K32 +/- 1% 250mW 200V 50 ppm/DEG.C. SURFACE MOUNTED. SIZE MINI-MELF.	VISHAY COMPONENTS	SMM0204-3K32-1%50ppm
R33	248**1199	RESISTOR-FIXED METAL-FILM 4K75 +/- 1% 250mW 200V 50 ppm/DEG.C. SURFACE MOUNTED. SIZE MINI-MELF.	VISHAY COMPONENTS	SMM0204-4K75-1%50ppm
R34	248**1195	RESISTOR-FIXED METAL-FILM 3K32 +/- 1% 250mW 200V 50 ppm/DEG.C. SURFACE MOUNTED. SIZE MINI-MELF.	VISHAY COMPONENTS	SMM0204-3K32-1%50ppm

Cir. Ref.	MI part number	Description	Manufacturer	Manufacturer's part number
RF oscillator C2 (contd.)				
R37	24811/155	RESISTOR-FIXED METAL-FILM 182R +/- 1% 250mW 200V 50 ppm/DEG.C, SURFACE MOUNTED, SIZE MINI-MELF,	VISHAY COMPONENTS	SMM0204-182R-1%50ppm
R38	24811/133	RESISTOR-FIXED METAL-FILM 22R1 +/- 1% 250mW 200V 50 ppm/DEG.C, SURFACE MOUNTED, SIZE MINI-MELF,	VISHAY COMPONENTS	SMM0204-22R1-1%50ppm
R39	24811/143	RESISTOR-FIXED METAL-FILM 56R2 +/- 1% 250mW 200V 50 ppm/DEG.C, SURFACE MOUNTED, SIZE MINI-MELF,	VISHAY COMPONENTS	SMM0204-56R2-1%50ppm
R40	24772/057	RESISTOR-FIXED METAL-FILM 220R +/- 2% 125mW 150V 100 ppm/DEG.C, AXIAL, (TAPED).	VISHAY COMPONENTS	NK3-220R-2%
R41	24811/901	RESISTOR-FIXED METAL-FILM 10R +/- 1% 250mW 200V 50 ppm/DEG.C, LOW-INDUCTANCE, SURFACE MOUNTED, SIZE	VISHAY COMPONENTS	SMM0204-HF-10R-1%
R42	24811/901	RESISTOR-FIXED METAL-FILM 10R +/- 1% 250mW 200V 50 ppm/DEG.C, LOW-INDUCTANCE, SURFACE MOUNTED, SIZE	VISHAY COMPONENTS	SMM0204-HF-10R-1%
R43	24772/067	RESISTOR-FIXED METAL-FILM 560R +/- 2% 125mW 150V 100 ppm/DEG.C, AXIAL, (TAPED).	VISHAY COMPONENTS	NK3-560R-2%
R44 to R46	24811/197	RESISTOR-FIXED METAL-FILM 10K +/- 1% 250mW 200V 50 ppm/DEG.C, SURFACE MOUNTED, SIZE MINI-MELF, (8mm	VISHAY COMPONENTS	SMM0204-10K-1%50ppm
R47	24811/173	RESISTOR-FIXED METAL-FILM 1K +/- 1% 250mW 200V 50 ppm/DEG.C, SURFACE MOUNTED, SIZE MINI-MELF, (8mm	VISHAY COMPONENTS	SMM0204-1K0-1%-50ppm
R48	24811/173	RESISTOR-FIXED METAL-FILM 1K +/- 1% 250mW 200V 50 ppm/DEG.C, SURFACE MOUNTED, SIZE MINI-MELF, (8mm	VISHAY COMPONENTS	SMM0204-1K0-1%-50ppm
R49	24811/902	RESISTOR-FIXED METAL-FILM 16R2 +/- 1% 250mW 200V 50 ppm/DEG.C, LOW-INDUCTANCE, SURFACE MOUNTED,	VISHAY COMPONENTS	SMM0204-HF-16R2-1%
R50	24811/910	RESISTOR-FIXED METAL-FILM 61R9 +/- 1% 250mW 200V 50 ppm/DEG.C, LOW-INDUCTANCE, SURFACE MOUNTED,	VISHAY COMPONENTS	SMM0204-HF-61R9-1%
R51	24811/910	RESISTOR-FIXED METAL-FILM 61R9 +/- 1% 250mW 200V 50 ppm/DEG.C, LOW-INDUCTANCE, SURFACE MOUNTED,	VISHAY COMPONENTS	SMM0204-HF-61R9-1%
R52	24811/175	RESISTOR-FIXED METAL-FILM 1K21 +/- 1% 250mW 200V 50 ppm/DEG.C, SURFACE MOUNTED, SIZE MINI-MELF,	VISHAY COMPONENTS	SMM0204-1K21-1%50ppm
R53	24811/175	RESISTOR-FIXED METAL-FILM 1K21 +/- 1% 250mW 200V 50 ppm/DEG.C, SURFACE MOUNTED, SIZE MINI-MELF,	VISHAY COMPONENTS	SMM0204-1K21-1%50ppm
R54	24338/004	RESISTOR-FIXED METAL-GLAZE 150R +/- 5% 1W 100V 350 ppm/DEG.C, SURFACE MOUNTED, SIZE 2512, (12mm	VISHAY COMPONENTS	CR2512-150R-5%-P4
R55	24811/134	RESISTOR-FIXED METAL-FILM 24R3 +/- 1% 250mW 200V 50 ppm/DEG.C, SURFACE MOUNTED, SIZE MINI-MELF,	VISHAY COMPONENTS	SMM0204-24R3-1%50ppm
R59	24811/173	RESISTOR-FIXED METAL-FILM 1K +/- 1% 250mW 200V 50 ppm/DEG.C, SURFACE MOUNTED, SIZE MINI-MELF, (8mm	VISHAY COMPONENTS	SMM0204-1K0-1%-50ppm
R60	24772/066	RESISTOR-FIXED METAL-FILM 510R +/- 2% 125mW 150V 100 ppm/DEG.C, AXIAL, (TAPED).	VISHAY COMPONENTS	NK3-510R-2%
R62	24811/149	RESISTOR-FIXED METAL-FILM 100R +/- 1% 250mW 200V 50 ppm/DEG.C, SURFACE MOUNTED, SIZE MINI-MELF,	VISHAY COMPONENTS	SMM0204-100R-1%50ppm
R63	24811/149	RESISTOR-FIXED METAL-FILM 100R +/- 1% 250mW 200V 50 ppm/DEG.C, SURFACE MOUNTED, SIZE MINI-MELF,	VISHAY COMPONENTS	SMM0204-100R-1%50ppm
R64	24811/181	RESISTOR-FIXED METAL-FILM 2K21 +/- 1% 250mW 200V 50 ppm/DEG.C, SURFACE MOUNTED, SIZE MINI-MELF,	VISHAY COMPONENTS	SMM0204-2K21-1%50ppm
R65	24811/159	RESISTOR-FIXED METAL-FILM 274R +/- 1% 250mW 200V 50 ppm/DEG.C, SURFACE MOUNTED, SIZE MINI-MELF,	VISHAY COMPONENTS	SMM0204-274R-1%50ppm
R66	24811/139	RESISTOR-FIXED METAL-FILM 39R2 +/- 1% 250mW 200V 50 ppm/DEG.C, SURFACE MOUNTED, SIZE MINI-MELF,	VISHAY COMPONENTS	SMM0204-39R2-1%50ppm
R67	24811/149	RESISTOR-FIXED METAL-FILM 100R +/- 1% 250mW 200V 50 ppm/DEG.C, SURFACE MOUNTED, SIZE MINI-MELF,	VISHAY COMPONENTS	SMM0204-100R-1%50ppm
R68	24811/149	RESISTOR-FIXED METAL-FILM 100R +/- 1% 250mW 200V 50 ppm/DEG.C, SURFACE MOUNTED, SIZE MINI-MELF,	VISHAY COMPONENTS	SMM0204-100R-1%50ppm

RF oscillator C2 (contd.)

Cir. Ref.	MI part number	Description	Manufacturer	Manufacturer's part number
R69	24811/184	RESISTOR-FIXED METAL-FILM 3K01 +/- 1% 250mW 200V 50 ppm/DEG.C, SURFACE MOUNTED, SIZE MINI-MELF,	VISHAY COMPONENTS	SMM0204-3K01-1%50ppm
R70	24811/164	RESISTOR-FIXED METAL-FILM 432R +/- 1% 250mW 200V 50 ppm/DEG.C, SURFACE MOUNTED, SIZE MINI-MELF,	VISHAY COMPONENTS	SMM0204-432R-1%50ppm
R71	24811/149	RESISTOR-FIXED METAL-FILM 100R +/- 1% 250mW 200V 50 ppm/DEG.C, SURFACE MOUNTED, SIZE MINI-MELF,	VISHAY COMPONENTS	SMM0204-100R-1%50ppm
R72	24811/149	RESISTOR-FIXED METAL-FILM 100R +/- 1% 250mW 200V 50 ppm/DEG.C, SURFACE MOUNTED, SIZE MINI-MELF,	VISHAY COMPONENTS	SMM0204-100R-1%50ppm
R73	24811/171	RESISTOR-FIXED METAL-FILM 825R +/- 1% 250mW 200V 50 ppm/DEG.C, SURFACE MOUNTED, SIZE MINI-MELF,	VISHAY COMPONENTS	SMM0204-825R-1%50ppm
R74 to R76	24811/149	RESISTOR-FIXED METAL-FILM 100R +/- 1% 250mW 200V 50 ppm/DEG.C, SURFACE MOUNTED, SIZE MINI-MELF,	VISHAY COMPONENTS	SMM0204-100R-1%50ppm
R77 to R80	24811/125	RESISTOR-FIXED METAL-FILM 10R +/- 1% 250mW 200V 50 ppm/DEG.C, SURFACE MOUNTED, SIZE MINI-MELF, (8mm	VISHAY COMPONENTS	SMM0204-10R-1%-50ppm
R81	24811/905	RESISTOR-FIXED METAL-FILM 33R2 +/- 1% 250mW 200V 50 ppm/DEG.C, LOW-INDUCTANCE, SURFACE MOUNTED,	VISHAY COMPONENTS	SMM0204-HF-33R2-1%
R82	24811/929	RESISTOR-FIXED METAL-FILM 27R4 +/- 1% 250mW 200V 50 ppm/DEG.C, LOW-INDUCTANCE, SURFACE MOUNTED,	VISHAY COMPONENTS	SMM0204-HF-27R4-1%
R83	24811/905	RESISTOR-FIXED METAL-FILM 33R2 +/- 1% 250mW 200V 50 ppm/DEG.C, LOW-INDUCTANCE, SURFACE MOUNTED,	VISHAY COMPONENTS	SMM0204-HF-33R2-1%
R84	24811/906	RESISTOR-FIXED METAL-FILM 36R5 +/- 1% 250mW 200V 50 ppm/DEG.C, LOW-INDUCTANCE, SURFACE MOUNTED,	VISHAY COMPONENTS	SMM0204-HF-36R5-1%
R85	24811/906	RESISTOR-FIXED METAL-FILM 36R5 +/- 1% 250mW 200V 50 ppm/DEG.C, LOW-INDUCTANCE, SURFACE MOUNTED,	VISHAY COMPONENTS	SMM0204-HF-36R5-1%
R91 to R95	24811/225	RESISTOR-FIXED METAL-FILM 150K +/- 1% 250mW 200V 50 ppm/DEG.C, SURFACE MOUNTED, SIZE MINI-MELF,	VISHAY COMPONENTS	SMM0204-150K-1%50ppm
R96	24811/173	RESISTOR-FIXED METAL-FILM 1K +/- 1% 250mW 200V 50 ppm/DEG.C, SURFACE MOUNTED, SIZE MINI-MELF, (8mm	VISHAY COMPONENTS	SMM0204-1K0-1%-50ppm
R97	24811/173	RESISTOR-FIXED METAL-FILM 1K +/- 1% 250mW 200V 50 ppm/DEG.C, SURFACE MOUNTED, SIZE MINI-MELF, (8mm	VISHAY COMPONENTS	SMM0204-1K0-1%-50ppm
R100	24811/101	RESISTOR-FIXED METAL-FILM 1R +/- 1% 250mW 200V 50 ppm/DEG.C, SURFACE MOUNTED, SIZE MINI-MELF, (8mm	VISHAY COMPONENTS	SMM0204-1R-1%-50ppm
R101	24811/149	RESISTOR-FIXED METAL-FILM 100R +/- 1% 250mW 200V 50 ppm/DEG.C, SURFACE MOUNTED, SIZE MINI-MELF,	VISHAY COMPONENTS	SMM0204-100R-1%50ppm
R104	24811/163	RESISTOR-FIXED METAL-FILM 392R +/- 1% 250mW 200V 50 ppm/DEG.C, SURFACE MOUNTED, SIZE MINI-MELF,	VISHAY COMPONENTS	SMM0204-392R-1%50ppm
R105	24811/163	RESISTOR-FIXED METAL-FILM 392R +/- 1% 250mW 200V 50 ppm/DEG.C, SURFACE MOUNTED, SIZE MINI-MELF,	VISHAY COMPONENTS	SMM0204-392R-1%50ppm
R106	24811/205	RESISTOR-FIXED METAL-FILM 22K1 +/- 1% 250mW 200V 50 ppm/DEG.C, SURFACE MOUNTED, SIZE MINI-MELF,	VISHAY COMPONENTS	SMM0204-22K1-1%50ppm
R120	24811/143	RESISTOR-FIXED METAL-FILM 56R2 +/- 1% 250mW 200V 50 ppm/DEG.C, SURFACE MOUNTED, SIZE MINI-MELF,	VISHAY COMPONENTS	SMM0204-56R2-1%50ppm
R121	24811/190	RESISTOR-FIXED METAL-FILM 5K11 +/- 1% 250mW 200V 50 ppm/DEG.C, SURFACE MOUNTED, SIZE MINI-MELF,	VISHAY COMPONENTS	SMM0204-5K11-1%50ppm
R122	24811/185	RESISTOR-FIXED METAL-FILM 3K32 +/- 1% 250mW 200V 50 ppm/DEG.C, SURFACE MOUNTED, SIZE MINI-MELF,	VISHAY COMPONENTS	SMM0204-3K32-1%50ppm
R123	24811/137	RESISTOR-FIXED METAL-FILM 33R2 +/- 1% 250mW 200V 50 ppm/DEG.C, SURFACE MOUNTED, SIZE MINI-MELF,	VISHAY COMPONENTS	SMM0204-33R2-1%50ppm
R124	24811/917	RESISTOR-FIXED METAL-FILM 332R +/- 1% 250mW 200V 50 ppm/DEG.C, LOW-INDUCTANCE, SURFACE MOUNTED,	VISHAY COMPONENTS	SMM0204-HF-332R-1%
R125	24811/172	RESISTOR-FIXED METAL-FILM 909R +/- 1% 250mW 200V 50 ppm/DEG.C, SURFACE MOUNTED, SIZE MINI-MELF,	VISHAY COMPONENTS	SMM0204-909R-1%50ppm

Cir. Ref.	MI part number	Description	Manufacturer	Manufacturer's part number
RF oscillator C2 (contd.)				
R126	24811/137	RESISTOR-FIXED METAL-FILM 33R2 +/- 1% 250mW 200V 50 ppm/DEG.C, SURFACE MOUNTED, SIZE MINI-MELF,	VISHAY COMPONENTS	SMM0204-33R2-1%50ppm
R127	24811/173	RESISTOR-FIXED METAL-FILM 1K +/- 1% 250mW 200V 50 ppm/DEG.C, SURFACE MOUNTED, SIZE MINI-MELF, (8mm	VISHAY COMPONENTS	SMM0204-1K0-1%-50ppm
R128	24811/173	RESISTOR-FIXED METAL-FILM 1K +/- 1% 250mW 200V 50 ppm/DEG.C, SURFACE MOUNTED, SIZE MINI-MELF, (8mm	VISHAY COMPONENTS	SMM0204-1K0-1%-50ppm
R129	24811/181	RESISTOR-FIXED METAL-FILM 2K21 +/- 1% 250mW 200V 50 ppm/DEG.C, SURFACE MOUNTED, SIZE MINI-MELF,	VISHAY COMPONENTS	SMM0204-2K21-1%50ppm
R130	24811/149	RESISTOR-FIXED METAL-FILM 100R +/- 1% 250mW 200V 50 ppm/DEG.C, SURFACE MOUNTED, SIZE MINI-MELF,	VISHAY COMPONENTS	SMM0204-100R-1%50ppm
SKJ	23435/990	CONNECTOR SHORTING, SOCKET, 2 WAY, FOR 0.64mm SQ PINS, 2.54mm PITCH, 9.6mm HIGH, FREE MOUNTING,	BERG ELECTRONICS	65474-001
TP1 to TP9	23435/188	TERMINAL CONNECTOR-PIN, 0.64mm SQUARE, 5.97mm HIGH, PCB-MOUNTING, SINGLE-ENDED, PHOSPHOR BRONZE,	BERG ELECTRONICS	75401-001
TR1	28453/829	TRANSISTOR NPN BIPOLAR BC848B... 30V 200MHz 200mW 100mA 290hFE @ 2mA, NOISE 2dB @ 1KHz, MARKING CODE	PHILIPS	BC848B
TR2	28433/828	TRANSISTOR PNP BIPOLAR BC858B... 30V 150MHz 200mW 100mA 220hFE MIN @ 2mA, MARKING CODE 3K, SURFACE	PHILIPS	BC858B
TR3	28457/850	TRANSISTOR NPN BIPOLAR FMMT2369... 40V 600MHz 300mW 500mA 40hFE MIN @ 10mA, MARKING CODE *1J,	PHILIPS	PMBT2369
TR4	28453/829	TRANSISTOR NPN BIPOLAR BC848B... 30V 200MHz 200mW 100mA 290hFE @ 2mA, NOISE 2dB @ 1KHz, MARKING CODE	PHILIPS	BC848B
TR5	28433/828	TRANSISTOR PNP BIPOLAR BC858B... 30V 150MHz 200mW 100mA 220hFE MIN @ 2mA, MARKING CODE 3K, SURFACE	PHILIPS	BC858B
TR6	28453/829	TRANSISTOR NPN BIPOLAR BC848B... 30V 200MHz 200mW 100mA 290hFE @ 2mA, NOISE 2dB @ 1KHz, MARKING CODE	PHILIPS	BC848B
TR7	28433/828	TRANSISTOR PNP BIPOLAR BC858B... 30V 150MHz 200mW 100mA 220hFE MIN @ 2mA, MARKING CODE 3K, SURFACE	PHILIPS	BC858B
TR8	28457/850	TRANSISTOR NPN BIPOLAR FMMT2369... 40V 600MHz 300mW 500mA 40hFE MIN @ 10mA, MARKING CODE *1J,	PHILIPS	PMBT2369
TR9	28433/828	TRANSISTOR PNP BIPOLAR BC858B... 30V 150MHz 200mW 100mA 220hFE MIN @ 2mA, MARKING CODE 3K, SURFACE	PHILIPS	BC858B
TR10	28453/829	TRANSISTOR NPN BIPOLAR BC848B... 30V 200MHz 200mW 100mA 290hFE @ 2mA, NOISE 2dB @ 1KHz, MARKING CODE	PHILIPS	BC848B
TR11	28453/829	TRANSISTOR NPN BIPOLAR BC848B... 30V 200MHz 200mW 100mA 290hFE @ 2mA, NOISE 2dB @ 1KHz, MARKING CODE	PHILIPS	BC848B
TR12 to TR14	28487/809	TRANSISTOR NPN BIPOLAR BFR93A... 12V 5GHz 250mW 35mA 40hFE MIN @ 30mA, MARKING CODE R2, SURFACE	PHILIPS	BFR93A
TR15	28433/828	TRANSISTOR PNP BIPOLAR BC858B... 30V 150MHz 200mW 100mA 220hFE MIN @ 2mA, MARKING CODE 3K, SURFACE	PHILIPS	BC858B
TR16	28453/829	TRANSISTOR NPN BIPOLAR BC848B... 30V 200MHz 200mW 100mA 290hFE @ 2mA, NOISE 2dB @ 1KHz, MARKING CODE	PHILIPS	BC848B
TR20	28457/850	TRANSISTOR NPN BIPOLAR FMMT2369... 40V 600MHz 300mW 500mA 40hFE MIN @ 10mA, MARKING CODE *1J,	PHILIPS	PMBT2369

Cir. Ref.	MI part number	Description	Manufacturer	Manufacturer's part number

RF divider C3

When ordering, prefix circuit reference with C3.

	44830-105	Complete unit	Issue D	
C1 to C11	26386/875	CAPACITOR-FIXED CERAMIC 10nF +/-10% 50V X7R/2C1, MULTILAYER, SURFACE-MOUNTED, SIZE 0805, NICKEL	ROHM ELECTRONICS LTD	MCH21-5C-103-KP
C12	26343/753	CAPACITOR-FIXED CERAMIC 6.8pF +/-0.5pF 50V NPO MULTILAYER, SURFACE-MOUNTED, SIZE 0805, NICKEL	ROHM ELECTRONICS LTD	MCH21-5A-6R8-DP
C13 to C16	26386/863	CAPACITOR-FIXED CERAMIC 1nF +/-10% 50V X7R/2C1, MULTILAYER, SURFACE-MOUNTED, SIZE 0805, NICKEL	ROHM ELECTRONICS LTD	MCH21-5C-102-KP
C17 to C24	26386/875	CAPACITOR-FIXED CERAMIC 10nF +/-10% 50V X7R/2C1, MULTILAYER, SURFACE-MOUNTED, SIZE 0805, NICKEL	ROHM ELECTRONICS LTD	MCH21-5C-103-KP
C25	26386/973	CAPACITOR-FIXED CERAMIC 3.3pF +/-0.1pF 50V 60 ppm/DEG.C, HIGH-Q, SINGLELAYER, SURFACE-MOUNTED,	AVX LTD	0805-5K-3R3-BAW-TR
C26	26386/970	CAPACITOR-FIXED CERAMIC 1.5pF +/-0.1pF 50V 60 ppm/DEG.C, HIGH-Q, SINGLELAYER, SURFACE-MOUNTED,	AVX LTD	0805-5K-1R5-BAW-TR
C27	26386/954	CAPACITOR-FIXED CERAMIC 8.2pF +/-0.25pF 50V 60 ppm/DEG.C, HIGH-Q, SINGLELAYER, SURFACE-MOUNTED,	AVX LTD	0805-5K-8R2-CAW-TR
C28	26386/975	CAPACITOR-FIXED CERAMIC 6.8pF +/-0.1pF 50V 60 ppm/DEG.C, HIGH-Q, SINGLELAYER, SURFACE-MOUNTED,	AVX LTD	0805-5K-6R8-BAW-TR
C29	26386/970	CAPACITOR-FIXED CERAMIC 1.5pF +/-0.1pF 50V 60 ppm/DEG.C, HIGH-Q, SINGLELAYER, SURFACE-MOUNTED,	AVX LTD	0805-5K-1R5-BAW-TR
C30	26386/875	CAPACITOR-FIXED CERAMIC 10nF +/-10% 50V X7R/2C1, MULTILAYER, SURFACE-MOUNTED, SIZE 0805, NICKEL	ROHM ELECTRONICS LTD	MCH21-5C-103-KP
C31	26386/973	CAPACITOR-FIXED CERAMIC 3.3pF +/-0.1pF 50V 60 ppm/DEG.C, HIGH-Q, SINGLELAYER, SURFACE-MOUNTED,	AVX LTD	0805-5K-3R3-BAW-TR
C32	26386/969	CAPACITOR-FIXED CERAMIC 1pF +/- 0.1pF 50V 60 ppm/DEG.C, HIGH-Q, SINGLELAYER, SURFACE-MOUNTED,	AVX LTD	0805-5K-1R0-BAW-TR
C33	26386/975	CAPACITOR-FIXED CERAMIC 6.8pF +/-0.1pF 50V 60 ppm/DEG.C, HIGH-Q, SINGLELAYER, SURFACE-MOUNTED,	AVX LTD	0805-5K-6R8-BAW-TR
C34	26386/973	CAPACITOR-FIXED CERAMIC 3.3pF +/-0.1pF 50V 60 ppm/DEG.C, HIGH-Q, SINGLELAYER, SURFACE-MOUNTED,	AVX LTD	0805-5K-3R3-BAW-TR
C35	26386/972	CAPACITOR-FIXED CERAMIC 2.7pF +/-0.1pF 50V 60 ppm/DEG.C, HIGH-Q, SINGLELAYER, SURFACE-MOUNTED,	AVX LTD	0805-5K-2R7-BAW-TR
C36 to C43	26386/875	CAPACITOR-FIXED CERAMIC 10nF +/-10% 50V X7R/2C1, MULTILAYER, SURFACE-MOUNTED, SIZE 0805, NICKEL	ROHM ELECTRONICS LTD	MCH21-5C-103-KP
C44	26343/767	CAPACITOR-FIXED CERAMIC 10pF +/-5% 50V NPO MULTILAYER, SURFACE-MOUNTED, SIZE 0805, NICKEL	ROHM ELECTRONICS LTD	MCH21-5A-100-DP
C45	26386/971	CAPACITOR-FIXED CERAMIC 2.2pF +/-0.1pF 50V 60 ppm/DEG.C, HIGH-Q, SINGLELAYER, SURFACE-MOUNTED,	AVX LTD	0805-5K-2R2-BAW-TR
C46	26386/815	CAPACITOR-FIXED CERAMIC 18pF +/-5% 50V NP0 MULTILAYER, SURFACE-MOUNTED, SIZE 0805, NICKEL	ROHM ELECTRONICS LTD	MCH21-5A-180-JP
C47	26343/753	CAPACITOR-FIXED CERAMIC 6.8pF +/-0.5pF 50V NPO MULTILAYER, SURFACE-MOUNTED, SIZE 0805, NICKEL	ROHM ELECTRONICS LTD	MCH21-5A-6R8-DP
C48	26343/753	CAPACITOR-FIXED CERAMIC 6.8pF +/-0.5pF 50V NPO MULTILAYER, SURFACE-MOUNTED, SIZE 0805, NICKEL	ROHM ELECTRONICS LTD	MCH21-5A-6R8-DP
C49	26386/875	CAPACITOR-FIXED CERAMIC 10nF +/-10% 50V X7R/2C1, MULTILAYER, SURFACE-MOUNTED, SIZE 0805, NICKEL	ROHM ELECTRONICS LTD	MCH21-5C-103-KP
C50	26386/955	CAPACITOR-FIXED CERAMIC 10pF +/-0.25pF 100V 60 ppm/DEG.C, HIGH-Q, SINGLELAYER, SURFACE-MOUNTED,	AVX LTD	0805-1K-100-GAW-TR

Cir. Ref.	MI part number	Description	Manufacturer	Manufacturer's part number
RF divider C3 (contd.)				
C51	26386/985	CAPACITOR-FIXED CERAMIC 1.2pF +/-0.1pF 50V 60 ppm/DEG.C, HIGH-Q, SINGLELAYER, SURFACE-MOUNTED,	AVX LTD	0805-5K-1R2-BAW-TR
C52	26386/766	CAPACITOR-FIXED CERAMIC 15pF +/-5% 100V 60 ppm/DEG.C, HIGH-Q, SINGLELAYER, SURFACE-MOUNTED,	AVX LTD	0805-1K-150-JAW-TR
C53	26386/898	CAPACITOR-FIXED CERAMIC 5.6pF +/-0.1pF 50V 60 ppm/DEG.C, HIGH-Q, SINGLELAYER, SURFACE-MOUNTED,	AVX LTD	0805-5K5R6-BAW-TR
C54	26386/955	CAPACITOR-FIXED CERAMIC 10pF +/-0.25pF 100V 60 ppm/DEG.C, HIGH-Q, SINGLELAYER, SURFACE-MOUNTED,	AVX LTD	0805-1K-100-GAW-TR
C55	26386/875	CAPACITOR-FIXED CERAMIC 10nF +/-10% 50V X7R/2C1, MULTILAYER, SURFACE-MOUNTED, SIZE 0805, NICKEL	ROHM ELECTRONICS LTD	MCH21-5C-103-KP
C56	26386/766	CAPACITOR-FIXED CERAMIC 15pF +/-5% 100V 60 ppm/DEG.C, HIGH-Q, SINGLELAYER, SURFACE-MOUNTED,	AVX LTD	0805-1K-150-JAW-TR
C57	26386/973	CAPACITOR-FIXED CERAMIC 3.3pF +/-0.1pF 50V 60 ppm/DEG.C, HIGH-Q, SINGLELAYER, SURFACE-MOUNTED,	AVX LTD	0805-5K-3R3-BAW-TR
C58	26386/818	CAPACITOR-FIXED CERAMIC 33pF +/-5% 50V NP0 MULTILAYER, SURFACE-MOUNTED, SIZE 0805, NICKEL	ROHM ELECTRONICS LTD	MCH21-5A-330-JP
C59	26343/767	CAPACITOR-FIXED CERAMIC 10pF +/-5% 50V NPO MULTILAYER, SURFACE-MOUNTED, SIZE 0805, NICKEL	ROHM ELECTRONICS LTD	MCH21-5A-100-DP
C60	26386/766	CAPACITOR-FIXED CERAMIC 15pF +/-5% 100V 60 ppm/DEG.C, HIGH-Q, SINGLELAYER, SURFACE-MOUNTED,	AVX LTD	0805-1K-150-JAW-TR
C61 to C77	26386/875	CAPACITOR-FIXED CERAMIC 10nF +/-10% 50V X7R/2C1, MULTILAYER, SURFACE-MOUNTED, SIZE 0805, NICKEL	ROHM ELECTRONICS LTD	MCH21-5C-103-KP
C78 to C85	26386/881	CAPACITOR-FIXED CERAMIC 33nF +/-10% 50V X7R/2C1, MULTILAYER, SURFACE-MOUNTED, SIZE 1210, NICKEL	ROHM ELECTRONICS LTD	MCH32-5C-333-KP
C86	26585/001	CAPACITOR-FIXED POLYESTER 1uF +/-10% 63V SURFACE-MOUNTED, SIZE 7.3 x 10mm, 4.5mm HIGH NOM,	WIMA CAPACITORS LTD	SMD7.3-1uF10%-63V-TR
C87 to C89	26386/875	CAPACITOR-FIXED CERAMIC 10nF +/-10% 50V X7R/2C1, MULTILAYER, SURFACE-MOUNTED, SIZE 0805, NICKEL	ROHM ELECTRONICS LTD	MCH21-5C-103-KP
C90	26386/863	CAPACITOR-FIXED CERAMIC 1nF +/-10% 50V X7R/2C1, MULTILAYER, SURFACE-MOUNTED, SIZE 0805, NICKEL	ROHM ELECTRONICS LTD	MCH21-5C-102-KP
C91 to C95	26386/875	CAPACITOR-FIXED CERAMIC 10nF +/-10% 50V X7R/2C1, MULTILAYER, SURFACE-MOUNTED, SIZE 0805, NICKEL	ROHM ELECTRONICS LTD	MCH21-5C-103-KP
C96	26386/887	CAPACITOR-FIXED CERAMIC 100nF +/-10% 50V X7R/2C1, MULTILAYER, SURFACE-MOUNTED, SIZE 1210, NICKEL	ROHM ELECTRONICS LTD	MCH32-5C-104-KP
C99 to C105	26386/875	CAPACITOR-FIXED CERAMIC 10nF +/-10% 50V X7R/2C1, MULTILAYER, SURFACE-MOUNTED, SIZE 0805, NICKEL	ROHM ELECTRONICS LTD	MCH21-5C-103-KP
C115	26386/815	CAPACITOR-FIXED CERAMIC 18pF +/-5% 50V NP0 MULTILAYER, SURFACE-MOUNTED, SIZE 0805, NICKEL	ROHM ELECTRONICS LTD	MCH21-5A-180-JP
C116	26343/753	CAPACITOR-FIXED CERAMIC 6.8pF +/-0.5pF 50V NPO MULTILAYER, SURFACE-MOUNTED, SIZE 0805, NICKEL	ROHM ELECTRONICS LTD	MCH21-5A-6R8-DP
C117	26386/819	CAPACITOR-FIXED CERAMIC 39pF +/-5% 50V NP0 MULTILAYER, SURFACE-MOUNTED, SIZE 0805, NICKEL	ROHM ELECTRONICS LTD	MCH21-5A-390-JP
C118	26386/762	CAPACITOR-FIXED CERAMIC 22pF +/-5% 50V 60 ppm/DEG.C, HIGH-Q, SINGLELAYER, SURFACE-MOUNTED,	AVX LTD	0805-5K-220-JAW
C119	26343/767	CAPACITOR-FIXED CERAMIC 10pF +/-5% 50V NPO MULTILAYER, SURFACE-MOUNTED, SIZE 0805, NICKEL	ROHM ELECTRONICS LTD	MCH21-5A-100-DP
C120	26386/875	CAPACITOR-FIXED CERAMIC 10nF +/-10% 50V X7R/2C1, MULTILAYER, SURFACE-MOUNTED, SIZE 0805, NICKEL	ROHM ELECTRONICS LTD	MCH21-5C-103-KP
C121	26386/875	CAPACITOR-FIXED CERAMIC 10nF +/-10% 50V X7R/2C1, MULTILAYER, SURFACE-MOUNTED, SIZE 0805, NICKEL	ROHM ELECTRONICS LTD	MCH21-5C-103-KP
C122	26451/010	CAPACITOR-FIXED ALUMINIUM 100uF +/-20% 6.3V ELECTROLYTIC, SURFACE-MOUNTED, SIZE 6.6 x 6.6mm,	PANASONIC INDUSTRIAL	ECE-V-0JA-101P

Cir. Ref.	MI part number	Description	Manufacturer	Manufacturer's part number
RF divider C3 (contd.)				
D1	28335/670	DIODE BAND SWITCHING, BAT18... 35V 100mA 1pF MAX @ 20V, 1.2VI @ 100mA, MARKING CODE A2, SURFACE	PHILIPS	BAT18/T1
D2	28335/670	DIODE BAND SWITCHING, BAT18... 35V 100mA 1pF MAX @ 20V, 1.2VI @ 100mA, MARKING CODE A2, SURFACE	PHILIPS	BAT18/T1
D3	28383/932	DIODE PIN, HSMP-3810... 250mW 100V 1A 0.35pF Rs 4R0 MAX @ 100mA, MARKING CODE E0, LOW PROFILE,	HEWLETT-PACKARD	HSMP-3810-L31
D4	28335/670	DIODE BAND SWITCHING, BAT18... 35V 100mA 1pF MAX @ 20V, 1.2VI @ 100mA, MARKING CODE A2, SURFACE	PHILIPS	BAT18/T1
D5 to D8	28383/932	DIODE PIN, HSMP-3810... 250mW 100V 1A 0.35pF Rs 4R0 MAX @ 100mA, MARKING CODE E0, LOW PROFILE,	HEWLETT-PACKARD	HSMP-3810-L31
D9	28335/670	DIODE BAND SWITCHING, BAT18... 35V 100mA 1pF MAX @ 20V, 1.2VI @ 100mA, MARKING CODE A2, SURFACE	PHILIPS	BAT18/T1
D10	28383/932	DIODE PIN, HSMP-3810... 250mW 100V 1A 0.35pF Rs 4R0 MAX @ 100mA, MARKING CODE E0, LOW PROFILE,	HEWLETT-PACKARD	HSMP-3810-L31
D11	28383/932	DIODE PIN, HSMP-3810... 250mW 100V 1A 0.35pF Rs 4R0 MAX @ 100mA, MARKING CODE E0, LOW PROFILE,	HEWLETT-PACKARD	HSMP-3810-L31
D12	28335/670	DIODE BAND SWITCHING, BAT18... 35V 100mA 1pF MAX @ 20V, 1.2VI @ 100mA, MARKING CODE A2, SURFACE	PHILIPS	BAT18/T1
D13	28383/932	DIODE PIN, HSMP-3810... 250mW 100V 1A 0.35pF Rs 4R0 MAX @ 100mA, MARKING CODE E0, LOW PROFILE,	HEWLETT-PACKARD	HSMP-3810-L31
D14 to D16	28335/670	DIODE BAND SWITCHING, BAT18... 35V 100mA 1pF MAX @ 20V, 1.2VI @ 100mA, MARKING CODE A2, SURFACE	PHILIPS	BAT18/T1
D17 to D32	28383/932	DIODE PIN, HSMP-3810... 250mW 100V 1A 0.35pF Rs 4R0 MAX @ 100mA, MARKING CODE E0, LOW PROFILE,	HEWLETT-PACKARD	HSMP-3810-L31
D34	28335/670	DIODE BAND SWITCHING, BAT18... 35V 100mA 1pF MAX @ 20V, 1.2VI @ 100mA, MARKING CODE A2, SURFACE	PHILIPS	BAT18/T1
D36	28335/670	DIODE BAND SWITCHING, BAT18... 35V 100mA 1pF MAX @ 20V, 1.2VI @ 100mA, MARKING CODE A2, SURFACE	PHILIPS	BAT18/T1
D39	28383/932	DIODE PIN, HSMP-3810... 250mW 100V 1A 0.35pF Rs 4R0 MAX @ 100mA, MARKING CODE E0, LOW PROFILE,	HEWLETT-PACKARD	HSMP-3810-L31
D41 to D48	28335/670	DIODE BAND SWITCHING, BAT18... 35V 100mA 1pF MAX @ 20V, 1.2VI @ 100mA, MARKING CODE A2, SURFACE	PHILIPS	BAT18/T1
D49	28383/932	DIODE PIN, HSMP-3810... 250mW 100V 1A 0.35pF Rs 4R0 MAX @ 100mA, MARKING CODE E0, LOW PROFILE,	HEWLETT-PACKARD	HSMP-3810-L31
D50	28383/932	DIODE PIN, HSMP-3810... 250mW 100V 1A 0.35pF Rs 4R0 MAX @ 100mA, MARKING CODE E0, LOW PROFILE,	HEWLETT-PACKARD	HSMP-3810-L31
D51 to D53	28335/670	DIODE BAND SWITCHING, BAT18... 35V 100mA 1pF MAX @ 20V, 1.2VI @ 100mA, MARKING CODE A2, SURFACE	PHILIPS	BAT18/T1
IC2	28466/390	IC-DIGITAL NAND-GATE 74HC00... 2 INPUT, QUAD, CMOS-H/SPEED, 14 PIN, SMALL-OUTLINE.	PHILIPS	74HC00D
IC3	28465/065	IC-DIGITAL DECODER/DEMULTIPLEX 74HC154... 4-TO-16 LINE, CMOS-H/SPEED, 24 PIN, SMALL-OUTLINE.	PHILIPS	74HC154D
IC4 to IC6	28461/388	IC-ANALOGUE OPERATIONAL AMP LM324D... QUAD, GEN-PURPOSE, SLEW RATE 0.2V/uS MIN, GAIN BANDWIDTH	PHILIPS	LM324D
IC7	28469/566	IC-DIGITAL DIVIDER SP8402... DIVIDE BY 2 TO 256 SELECTABLE BY 2n, 1.5GHz, PHASE NOISE <160 dBc/Hz,	GEC PLESSEY SEMICOND	SP8402-KG-MPES
IC8	28461/388	IC-ANALOGUE OPERATIONAL AMP LM324D... QUAD, GEN-PURPOSE, SLEW RATE 0.2V/uS MIN, GAIN BANDWIDTH	PHILIPS	LM324D
IC9	28461/454	IC-ANALOGUE MICROWAVE-AMP MSA-0786... 4V 22mA GAIN 12.5dB @ 1GHz, 3dB BANDWIDTH DC-2GHz, BIPOLAR, 4	HEWLETT-PACKARD	MSA-0786-TR1

Cir. Ref.	MI part number	Description	Manufacturer	Manufacturer's part number
RF divider C3 (contd.)				
L1	23642/518	INDUCTOR-FIXED 0.56uH +/- 20% EPOXY-MOULD, 450mA 0R55 MAX, 30 Q @ 25.2 MHz, 180 MHz SRF, SURFACE	MEGGITT ELECTRONICS	3612-T-R56-M
L2	23642/518	INDUCTOR-FIXED 0.56uH +/- 20% EPOXY-MOULD, 450mA 0R55 MAX, 30 Q @ 25.2 MHz, 180 MHz SRF, SURFACE	MEGGITT ELECTRONICS	3612-T-R56-M
L8	23642/714	INDUCTOR-FIXED 1.5uH +/- 5% EPOXY-MOULD, 370mA 0R85 MAX, 30 Q @ 7.96 MHz, 85 MHz SRF, SURFACE	MEGGITT ELECTRONICS	3612-T-1R5-J
L9 to L19	23642/518	INDUCTOR-FIXED 0.56uH +/- 20% EPOXY-MOULD, 450mA 0R55 MAX, 30 Q @ 25.2 MHz, 180 MHz SRF, SURFACE	MEGGITT ELECTRONICS	3612-T-R56-M
L22	23642/714	INDUCTOR-FIXED 1.5uH +/- 5% EPOXY-MOULD, 370mA 0R85 MAX, 30 Q @ 7.96 MHz, 85 MHz SRF, SURFACE	MEGGITT ELECTRONICS	3612-T-1R5-J
L25	23642/714	INDUCTOR-FIXED 1.5uH +/- 5% EPOXY-MOULD, 370mA 0R85 MAX, 30 Q @ 7.96 MHz, 85 MHz SRF, SURFACE	MEGGITT ELECTRONICS	3612-T-1R5-J
L26	23642/515	INDUCTOR-FIXED 0.033uH +/- 5% EPOXY-MOULD, 450mA 0R24 MAX, 25 Q @ 100 MHz, 1.4K MHz SRF, SURFACE	MEGGITT ELECTRONICS	3612-T-033-J
L27 to L31	23642/714	INDUCTOR-FIXED 1.5uH +/- 5% EPOXY-MOULD, 370mA 0R85 MAX, 30 Q @ 7.96 MHz, 85 MHz SRF, SURFACE	MEGGITT ELECTRONICS	3612-T-1R5-J
L32	23642/517	INDUCTOR-FIXED 0.047uH +/- 5% EPOXY-MOULD, 450mA 0R3 MAX, 26 Q @ 100 MHz, 1.2K MHz SRF, SURFACE	MEGGITT ELECTRONICS	3612-T-047-J
L33	23642/515	INDUCTOR-FIXED 0.033uH +/- 5% EPOXY-MOULD, 450mA 0R24 MAX, 25 Q @ 100 MHz, 1.4K MHz SRF, SURFACE	MEGGITT ELECTRONICS	3612-T-033-J
L34	23642/714	INDUCTOR-FIXED 1.5uH +/- 5% EPOXY-MOULD, 370mA 0R85 MAX, 30 Q @ 7.96 MHz, 85 MHz SRF, SURFACE	MEGGITT ELECTRONICS	3612-T-1R5-J
L37	23642/519	INDUCTOR-FIXED 0.068uH +/- 5% EPOXY-MOULD, 450mA 0R36 MAX, 27 Q @ 100 MHz, 1K MHz SRF, SURFACE	MEGGITT ELECTRONICS	3612-T-068-J
L38	23642/517	INDUCTOR-FIXED 0.047uH +/- 5% EPOXY-MOULD, 450mA 0R3 MAX, 26 Q @ 100 MHz, 1.2K MHz SRF, SURFACE	MEGGITT ELECTRONICS	3612-T-047-J
L39	23642/714	INDUCTOR-FIXED 1.5uH +/- 5% EPOXY-MOULD, 370mA 0R85 MAX, 30 Q @ 7.96 MHz, 85 MHz SRF, SURFACE	MEGGITT ELECTRONICS	3612-T-1R5-J
L40	23642/714	INDUCTOR-FIXED 1.5uH +/- 5% EPOXY-MOULD, 370mA 0R85 MAX, 30 Q @ 7.96 MHz, 85 MHz SRF, SURFACE	MEGGITT ELECTRONICS	3612-T-1R5-J
L46	23642/701	INDUCTOR-FIXED 2.2uH +/- 5% EPOXY-MOULD, 320mA 1R MAX, 30 Q @ 7.96 MHz, 75 MHz SRF, SURFACE MOUNTED,	MEGGITT ELECTRONICS	3612-T-2R2-J
L48	23642/727	INDUCTOR-FIXED 33uH +/- 10% EPOXY-MOULD, 300mA 1R4 MAX, 10 Q @ 2.52 MHz, 14 MHz SRF, SURFACE MOUNTED,	TDK UK LTD	NLC453232T-330K
L49	23642/701	INDUCTOR-FIXED 2.2uH +/- 5% EPOXY-MOULD, 320mA 1R MAX, 30 Q @ 7.96 MHz, 75 MHz SRF, SURFACE MOUNTED,	MEGGITT ELECTRONICS	3612-T-2R2-J
L50	23642/712	INDUCTOR-FIXED 0.082uH +/- 5% EPOXY-MOULD, 450mA 0R4 MAX, 27 Q @ 100 MHz, 900 MHz SRF, SURFACE	MEGGITT ELECTRONICS	3612-T-082-J
L51	23642/713	INDUCTOR-FIXED 0.056uH +/- 5% EPOXY-MOULD, 450mA 0R33 MAX, 26 Q @ 100 MHz, 1.1K MHz SRF, SURFACE	MEGGITT ELECTRONICS	3612-T-056-J
L54	23642/518	INDUCTOR-FIXED 0.56uH +/- 20% EPOXY-MOULD, 450mA 0R55 MAX, 30 Q @ 25.2 MHz, 180 MHz SRF, SURFACE	MEGGITT ELECTRONICS	3612-T-R56-M
L55	23642/518	INDUCTOR-FIXED 0.56uH +/- 20% EPOXY-MOULD, 450mA 0R55 MAX, 30 Q @ 25.2 MHz, 180 MHz SRF, SURFACE	MEGGITT ELECTRONICS	3612-T-R56-M
PLA	23435/188	TERMINAL CONNECTOR-PIN, 0.64mm SQUARE, 5.97mm HIGH, PCB-MOUNTING, SINGLE-ENDED, PHOSPHOR BRONZE,	BERG ELECTRONICS	75401-001
PLB	23435/188	TERMINAL CONNECTOR-PIN, 0.64mm SQUARE, 5.97mm HIGH, PCB-MOUNTING, SINGLE-ENDED, PHOSPHOR BRONZE,	BERG ELECTRONICS	75401-001

Cir. Ref.	MI part number	Description	Manufacturer	Manufacturer's part number
RF divider C3 (contd.)				
R3	24811/205	RESISTOR-FIXED METAL-FILM 22K1 +/- 1% 250mW 200V 50 ppm/DEG.C, SURFACE MOUNTED, SIZE MINI-MELF,	VISHAY COMPONENTS	SMM0204-22K1-1%50ppm
R4	24811/197	RESISTOR-FIXED METAL-FILM 10K +/- 1% 250mW 200V 50 ppm/DEG.C, SURFACE MOUNTED, SIZE MINI-MELF, (8mm	VISHAY COMPONENTS	SMM0204-10K-1%50ppm
R5	24811/165	RESISTOR-FIXED METAL-FILM 475R +/- 1% 250mW 200V 50 ppm/DEG.C, SURFACE MOUNTED, SIZE MINI-MELF,	VISHAY COMPONENTS	SMM0204-475R-1%50ppm
R6	24811/197	RESISTOR-FIXED METAL-FILM 10K +/- 1% 250mW 200V 50 ppm/DEG.C, SURFACE MOUNTED, SIZE MINI-MELF, (8mm	VISHAY COMPONENTS	SMM0204-10K-1%50ppm
R7	24811/165	RESISTOR-FIXED METAL-FILM 475R +/- 1% 250mW 200V 50 ppm/DEG.C, SURFACE MOUNTED, SIZE MINI-MELF,	VISHAY COMPONENTS	SMM0204-475R-1%50ppm
R8	24811/173	RESISTOR-FIXED METAL-FILM 1K +/- 1% 250mW 200V 50 ppm/DEG.C, SURFACE MOUNTED, SIZE MINI-MELF, (8mm	VISHAY COMPONENTS	SMM0204-1K0-1%-50ppm
R9	24811/915	RESISTOR-FIXED METAL-FILM 150R +/- 1% 250mW 200V 50 ppm/DEG.C, LOW-INDUCTANCE, SURFACE MOUNTED,	VISHAY COMPONENTS	SMM0204-HF-150R-1%
R10	24811/173	RESISTOR-FIXED METAL-FILM 1K +/- 1% 250mW 200V 50 ppm/DEG.C, SURFACE MOUNTED, SIZE MINI-MELF, (8mm	VISHAY COMPONENTS	SMM0204-1K0-1%-50ppm
R11	24811/165	RESISTOR-FIXED METAL-FILM 475R +/- 1% 250mW 200V 50 ppm/DEG.C, SURFACE MOUNTED, SIZE MINI-MELF,	VISHAY COMPONENTS	SMM0204-475R-1%50ppm
R12	24811/173	RESISTOR-FIXED METAL-FILM 1K +/- 1% 250mW 200V 50 ppm/DEG.C, SURFACE MOUNTED, SIZE MINI-MELF, (8mm	VISHAY COMPONENTS	SMM0204-1K0-1%-50ppm
R13	24811/142	RESISTOR-FIXED METAL-FILM 51R1 +/- 1% 250mW 200V 50 ppm/DEG.C, SURFACE MOUNTED, SIZE MINI-MELF,	VISHAY COMPONENTS	SMM0204-51R1-1%50ppm
R14	24811/161	RESISTOR-FIXED METAL-FILM 332R +/- 1% 250mW 200V 50 ppm/DEG.C, SURFACE MOUNTED, SIZE MINI-MELF,	VISHAY COMPONENTS	SMM0204-332R-1%50ppm
R15	24811/161	RESISTOR-FIXED METAL-FILM 332R +/- 1% 250mW 200V 50 ppm/DEG.C, SURFACE MOUNTED, SIZE MINI-MELF,	VISHAY COMPONENTS	SMM0204-332R-1%50ppm
R16	24811/914	RESISTOR-FIXED METAL-FILM 130R +/- 1% 250mW 200V 50 ppm/DEG.C, LOW-INDUCTANCE, SURFACE MOUNTED,	VISHAY COMPONENTS	SMM0204-HF-130R-1%
R17	24811/908	RESISTOR-FIXED METAL-FILM 43R2 +/- 1% 250mW 200V 50 ppm/DEG.C, LOW-INDUCTANCE, SURFACE MOUNTED,	VISHAY COMPONENTS	SMM0204-HF-43R2-1%
R18	24811/923	RESISTOR-FIXED METAL-FILM 68R1 +/- 1% 250mW 200V 50 ppm/DEG.C, LOW-INDUCTANCE, SURFACE MOUNTED,	VISHAY COMPONENTS	SMM0204-HF-68R1-1%
R19	24811/165	RESISTOR-FIXED METAL-FILM 475R +/- 1% 250mW 200V 50 ppm/DEG.C, SURFACE MOUNTED, SIZE MINI-MELF,	VISHAY COMPONENTS	SMM0204-475R-1%50ppm
R20	24811/184	RESISTOR-FIXED METAL-FILM 3K01 +/- 1% 250mW 200V 50 ppm/DEG.C, SURFACE MOUNTED, SIZE MINI-MELF,	VISHAY COMPONENTS	SMM0204-3K01-1%50ppm
R21	24811/173	RESISTOR-FIXED METAL-FILM 1K +/- 1% 250mW 200V 50 ppm/DEG.C, SURFACE MOUNTED, SIZE MINI-MELF, (8mm	VISHAY COMPONENTS	SMM0204-1K0-1%-50ppm
R22	24811/165	RESISTOR-FIXED METAL-FILM 475R +/- 1% 250mW 200V 50 ppm/DEG.C, SURFACE MOUNTED, SIZE MINI-MELF,	VISHAY COMPONENTS	SMM0204-475R-1%50ppm
R23	24811/173	RESISTOR-FIXED METAL-FILM 1K +/- 1% 250mW 200V 50 ppm/DEG.C, SURFACE MOUNTED, SIZE MINI-MELF, (8mm	VISHAY COMPONENTS	SMM0204-1K0-1%-50ppm
R24	24811/165	RESISTOR-FIXED METAL-FILM 475R +/- 1% 250mW 200V 50 ppm/DEG.C, SURFACE MOUNTED, SIZE MINI-MELF,	VISHAY COMPONENTS	SMM0204-475R-1%50ppm
R25	24811/173	RESISTOR-FIXED METAL-FILM 1K +/- 1% 250mW 200V 50 ppm/DEG.C, SURFACE MOUNTED, SIZE MINI-MELF, (8mm	VISHAY COMPONENTS	SMM0204-1K0-1%-50ppm
R26	24811/165	RESISTOR-FIXED METAL-FILM 475R +/- 1% 250mW 200V 50 ppm/DEG.C, SURFACE MOUNTED, SIZE MINI-MELF,	VISHAY COMPONENTS	SMM0204-475R-1%50ppm
R27	24811/173	RESISTOR-FIXED METAL-FILM 1K +/- 1% 250mW 200V 50 ppm/DEG.C, SURFACE MOUNTED, SIZE MINI-MELF, (8mm	VISHAY COMPONENTS	SMM0204-1K0-1%-50ppm
R28	24811/165	RESISTOR-FIXED METAL-FILM 475R +/- 1% 250mW 200V 50 ppm/DEG.C, SURFACE MOUNTED, SIZE MINI-MELF,	VISHAY COMPONENTS	SMM0204-475R-1%50ppm

Cir. Ref.	MI part number	Description	Manufacturer	Manufacturer's part number
RF divider C3 (contd.)				
R29	24811/165	RESISTOR-FIXED METAL-FILM 475R +/- 1% 250mW 200V 50 ppm/DEG.C, SURFACE MOUNTED, SIZE MINI-MELF,	VISHAY COMPONENTS	SMM0204-475R-1%50ppm
R30	24811/153	RESISTOR-FIXED METAL-FILM 150R +/- 1% 250mW 200V 50 ppm/DEG.C, SURFACE MOUNTED, SIZE MINI-MELF,	VISHAY COMPONENTS	SMM0204-150R-1%50ppm
R31	24811/146	RESISTOR-FIXED METAL-FILM 75R +/- 1% 250mW 200V 50 ppm/DEG.C, SURFACE MOUNTED, SIZE MINI-MELF, (8mm	VISHAY COMPONENTS	SMM0204-75R0-1%50ppm
R32	24811/165	RESISTOR-FIXED METAL-FILM 475R +/- 1% 250mW 200V 50 ppm/DEG.C, SURFACE MOUNTED, SIZE MINI-MELF,	VISHAY COMPONENTS	SMM0204-475R-1%50ppm
R33	24811/918	RESISTOR-FIXED METAL-FILM 12R1 +/- 1% 250mW 200V 50 ppm/DEG.C, LOW-INDUCTANCE, SURFACE MOUNTED,	VISHAY COMPONENTS	SMM0204-HF-12R1-1%
R34	24811/901	RESISTOR-FIXED METAL-FILM 10R +/- 1% 250mW 200V 50 ppm/DEG.C, LOW-INDUCTANCE, SURFACE MOUNTED, SIZE	VISHAY COMPONENTS	SMM0204-HF-10R-1%
R35	24811/197	RESISTOR-FIXED METAL-FILM 10K +/- 1% 250mW 200V 50 ppm/DEG.C, SURFACE MOUNTED, SIZE MINI-MELF, (8mm	VISHAY COMPONENTS	SMM0204-10K-1%50ppm
R36	24811/149	RESISTOR-FIXED METAL-FILM 100R +/- 1% 250mW 200V 50 ppm/DEG.C, SURFACE MOUNTED, SIZE MINI-MELF,	VISHAY COMPONENTS	SMM0204-100R-1%50ppm
R37	24811/165	RESISTOR-FIXED METAL-FILM 475R +/- 1% 250mW 200V 50 ppm/DEG.C, SURFACE MOUNTED, SIZE MINI-MELF,	VISHAY COMPONENTS	SMM0204-475R-1%50ppm
R38	24811/173	RESISTOR-FIXED METAL-FILM 1K +/- 1% 250mW 200V 50 ppm/DEG.C, SURFACE MOUNTED, SIZE MINI-MELF, (8mm	VISHAY COMPONENTS	SMM0204-1K0-1%-50ppm
R39	24811/165	RESISTOR-FIXED METAL-FILM 475R +/- 1% 250mW 200V 50 ppm/DEG.C, SURFACE MOUNTED, SIZE MINI-MELF,	VISHAY COMPONENTS	SMM0204-475R-1%50ppm
R40	24811/173	RESISTOR-FIXED METAL-FILM 1K +/- 1% 250mW 200V 50 ppm/DEG.C, SURFACE MOUNTED, SIZE MINI-MELF, (8mm	VISHAY COMPONENTS	SMM0204-1K0-1%-50ppm
R41	24811/173	RESISTOR-FIXED METAL-FILM 1K +/- 1% 250mW 200V 50 ppm/DEG.C, SURFACE MOUNTED, SIZE MINI-MELF, (8mm	VISHAY COMPONENTS	SMM0204-1K0-1%-50ppm
R42	24811/165	RESISTOR-FIXED METAL-FILM 475R +/- 1% 250mW 200V 50 ppm/DEG.C, SURFACE MOUNTED, SIZE MINI-MELF,	VISHAY COMPONENTS	SMM0204-475R-1%50ppm
R43	24811/173	RESISTOR-FIXED METAL-FILM 1K +/- 1% 250mW 200V 50 ppm/DEG.C, SURFACE MOUNTED, SIZE MINI-MELF, (8mm	VISHAY COMPONENTS	SMM0204-1K0-1%-50ppm
R44	24811/165	RESISTOR-FIXED METAL-FILM 475R +/- 1% 250mW 200V 50 ppm/DEG.C, SURFACE MOUNTED, SIZE MINI-MELF,	VISHAY COMPONENTS	SMM0204-475R-1%50ppm
R49	24811/923	RESISTOR-FIXED METAL-FILM 68R1 +/- 1% 250mW 200V 50 ppm/DEG.C, LOW-INDUCTANCE, SURFACE MOUNTED,	VISHAY COMPONENTS	SMM0204-HF-68R1-1%
R50	24811/914	RESISTOR-FIXED METAL-FILM 130R +/- 1% 250mW 200V 50 ppm/DEG.C, LOW-INDUCTANCE, SURFACE MOUNTED,	VISHAY COMPONENTS	SMM0204-HF-130R-1%
R51	24811/165	RESISTOR-FIXED METAL-FILM 475R +/- 1% 250mW 200V 50 ppm/DEG.C, SURFACE MOUNTED, SIZE MINI-MELF,	VISHAY COMPONENTS	SMM0204-475R-1%50ppm
R52	24811/161	RESISTOR-FIXED METAL-FILM 332R +/- 1% 250mW 200V 50 ppm/DEG.C, SURFACE MOUNTED, SIZE MINI-MELF,	VISHAY COMPONENTS	SMM0204-332R-1%50ppm
T1	43590/232	WOUND-PART TRANSFORMER, RING-CORE, 6:6 TURNS, TWISTED BIFILAR WOUND, MOUNTED ON 6-PIN TOROID	AMETHYST DESIGNS LTD	AD5313
TR1	28453/829	TRANSISTOR NPN BIPOLAR BC848B... 30V 200MHz 200mW 100mA 290hFE @ 2mA, NOISE 2dB @ 1KHz, MARKING CODE	PHILIPS	BC848B
TR2	28487/809	TRANSISTOR NPN BIPOLAR BFR93A... 12V 5GHz 250mW 35mA 40hFE MIN @ 30mA, MARKING CODE R2, SURFACE	PHILIPS	BFR93A
TR3	28453/829	TRANSISTOR NPN BIPOLAR BC848B... 30V 200MHz 200mW 100mA 290hFE @ 2mA, NOISE 2dB @ 1KHz, MARKING CODE	PHILIPS	BC848B

Cir. Ref.	MI part number	Description	Manufacturer	Manufacturer's part number

Bypass board C4

When ordering, prefix circuit reference with C4.

	44830/106	Complete unit	Issue F	
C1 to C9	26386/875	CAPACITOR-FIXED CERAMIC 10nF +/-10% 50V X7R/2C1, MULTILAYER, SURFACE-MOUNTED, SIZE 0805, NICKEL	ROHM ELECTRONICS LTD	MCH21-5C-103-KP
C10 to C13	26386/899	CAPACITOR-FIXED CERAMIC 100nF +/-10% 50V X7R/2C1, MULTILAYER, SURFACE-MOUNTED, SIZE 1206, NICKEL	ROHM ELECTRONICS LTD	MCH31-5C-104-KP
C14	26386/760	CAPACITOR-FIXED CERAMIC 220nF +/-10% 50V X7R MULTILAYER, SURFACE-MOUNTED, SIZE 1210, NICKEL	PHILIPS	1210-2R-224-K9-BBC
C15	26386/760	CAPACITOR-FIXED CERAMIC 220nF +/-10% 50V X7R MULTILAYER, SURFACE-MOUNTED, SIZE 1210, NICKEL	PHILIPS	1210-2R-224-K9-BBC
C16	26386/875	CAPACITOR-FIXED CERAMIC 10nF +/-10% 50V X7R/2C1, MULTILAYER, SURFACE-MOUNTED, SIZE 0805, NICKEL	ROHM ELECTRONICS LTD	MCH21-5C-103-KP
C17 to C20	26386/760	CAPACITOR-FIXED CERAMIC 220nF +/-10% 50V X7R MULTILAYER, SURFACE-MOUNTED, SIZE 1210, NICKEL	PHILIPS	1210-2R-224-K9-BBC
D1 to D4	28383/962	DIODE PIN, BAR60... TRIPLE, 100V 0.25pF 1.05Vf @ 100mA, T-CIRCUIT, MARKING CODE 60, SURFACE	SIEMENS LTD	BAR60
D5 to D7	28383/932	DIODE PIN, HSMP-3810... 250mW 100V 1A 0.35pF Rs 4R0 MAX @ 100mA, MARKING CODE E0, LOW PROFILE,	HEWLETT-PACKARD	HSMP-3810-L31
L1 to L4	23642/511	INDUCTOR-FIXED 0.12uH +/- 20% EPOXY-MOULD, 450mA 0R22 MAX, 30 Q @ 25.2 MHz, 500 MHz SRF, SURFACE	MEGGITT ELECTRONICS	3612-T-R12-M
L5	23642/726	INDUCTOR-FIXED 100uH +/- 10% EPOXY-MOULD, 110mA 5R6 MAX, 20 Q @ 0.796 MHz, 8.5 MHz SRF, SURFACE	MEGGITT ELECTRONICS	3613-A-101-K
L6	23642/726	INDUCTOR-FIXED 100uH +/- 10% EPOXY-MOULD, 110mA 5R6 MAX, 20 Q @ 0.796 MHz, 8.5 MHz SRF, SURFACE	MEGGITT ELECTRONICS	3613-A-101-K
PLA	23435/188	TERMINAL CONNECTOR-PIN, 0.64mm SQUARE, 5.97mm HIGH, PCB-MOUNTING, SINGLE-ENDED, PHOSPHOR BRONZE,	BERG ELECTRONICS	75401-001
R1	24811/162	RESISTOR-FIXED METAL-FILM 365R +/- 1% 250mW 200V 50 ppm/DEG.C, SURFACE MOUNTED, SIZE MINI-MELF,	VISHAY COMPONENTS	SMM0204-365R-1%50ppm
R2	24811/155	RESISTOR-FIXED METAL-FILM 182R +/- 1% 250mW 200V 50 ppm/DEG.C, SURFACE MOUNTED, SIZE MINI-MELF,	VISHAY COMPONENTS	SMM0204-182R-1%50ppm
R3 to R5	24811/162	RESISTOR-FIXED METAL-FILM 365R +/- 1% 250mW 200V 50 ppm/DEG.C, SURFACE MOUNTED, SIZE MINI-MELF,	VISHAY COMPONENTS	SMM0204-365R-1%50ppm
R6	24811/155	RESISTOR-FIXED METAL-FILM 182R +/- 1% 250mW 200V 50 ppm/DEG.C, SURFACE MOUNTED, SIZE MINI-MELF,	VISHAY COMPONENTS	SMM0204-182R-1%50ppm
R7	24811/162	RESISTOR-FIXED METAL-FILM 365R +/- 1% 250mW 200V 50 ppm/DEG.C, SURFACE MOUNTED, SIZE MINI-MELF,	VISHAY COMPONENTS	SMM0204-365R-1%50ppm
R8	24811/928	RESISTOR-FIXED METAL-FILM 121R +/- 1% 250mW 200V 50 ppm/DEG.C, LOW-INDUCTANCE, SURFACE MOUNTED,	VISHAY COMPONENTS	SMM0204-HF-121R-1%
R9	24811/909	RESISTOR-FIXED METAL-FILM 51R1 +/- 1% 250mW 200V 50 ppm/DEG.C, LOW-INDUCTANCE, SURFACE MOUNTED,	VISHAY COMPONENTS	SMM0204-HF-51R1-1%

Cir. Ref.	MI part number	Description	Manufacturer	Manufacturer's part number
Bypass board C4 (contd.)				
R10	24811/928	RESISTOR-FIXED METAL-FILM 121R +/- 1% 250mW 200V 50 ppm/DEG.C, LOW-INDUCTANCE, SURFACE MOUNTED,	VISHAY COMPONENTS	SMM0204-HF-121R-1%
R11	24811/162	RESISTOR-FIXED METAL-FILM 365R +/- 1% 250mW 200V 50 ppm/DEG.C, SURFACE MOUNTED, SIZE MINI-MELF,	VISHAY COMPONENTS	SMM0204-365R-1%50ppm
R12	24811/162	RESISTOR-FIXED METAL-FILM 365R +/- 1% 250mW 200V 50 ppm/DEG.C, SURFACE MOUNTED, SIZE MINI-MELF,	VISHAY COMPONENTS	SMM0204-365R-1%50ppm
R13	24811/155	RESISTOR-FIXED METAL-FILM 182R +/- 1% 250mW 200V 50 ppm/DEG.C, SURFACE MOUNTED, SIZE MINI-MELF,	VISHAY COMPONENTS	SMM0204-182R-1%50ppm
R14 to R17	24811/162	RESISTOR-FIXED METAL-FILM 365R +/- 1% 250mW 200V 50 ppm/DEG.C, SURFACE MOUNTED, SIZE MINI-MELF,	VISHAY COMPONENTS	SMM0204-365R-1%50ppm

Cir. Ref.	MI part number	Description	Manufacturer	Manufacturer's part number
BFO		**C5**		
		When ordering, prefix circuit reference with C5.		
	44830-107	Complete unit	Issue G	
C1	26386/899	CAPACITOR-FIXED CERAMIC 100nF +/-10% 50V X7R/2C1, MULTILAYER, SURFACE-MOUNTED, SIZE 1206, NICKEL	ROHM ELECTRONICS LTD	MCH31-5C-104-KP
C2	26386/875	CAPACITOR-FIXED CERAMIC 10nF +/-10% 50V X7R/2C1, MULTILAYER, SURFACE-MOUNTED, SIZE 0805, NICKEL	ROHM ELECTRONICS LTD	MCH21-5C-103-KP
C3	26451/009	CAPACITOR-FIXED ALUMINIUM 47uF +/-20% 16V ELECTROLYTIC, SURFACE-MOUNTED, SIZE 6.6 x 6.6mm,	PANASONIC INDUSTRIAL	ECE-V-1CA-470P
C4	26386/899	CAPACITOR-FIXED CERAMIC 100nF +/-10% 50V X7R/2C1, MULTILAYER, SURFACE-MOUNTED, SIZE 1206, NICKEL	ROHM ELECTRONICS LTD	MCH31-5C-104-KP
C5 to C8	26386/875	CAPACITOR-FIXED CERAMIC 10nF +/-10% 50V X7R/2C1, MULTILAYER, SURFACE-MOUNTED, SIZE 0805, NICKEL	ROHM ELECTRONICS LTD	MCH21-5C-103-KP
C9	26386/899	CAPACITOR-FIXED CERAMIC 100nF +/-10% 50V X7R/2C1, MULTILAYER, SURFACE-MOUNTED, SIZE 1206, NICKEL	ROHM ELECTRONICS LTD	MCH31-5C-104-KP
C10	26386/899	CAPACITOR-FIXED CERAMIC 100nF +/-10% 50V X7R/2C1, MULTILAYER, SURFACE-MOUNTED, SIZE 1206, NICKEL	ROHM ELECTRONICS LTD	MCH31-5C-104-KP
C11	26451/009	CAPACITOR-FIXED ALUMINIUM 47uF +/-20% 16V ELECTROLYTIC, SURFACE-MOUNTED, SIZE 6.6 x 6.6mm,	PANASONIC INDUSTRIAL	ECE-V-1CA-470P
C12	26386/899	CAPACITOR-FIXED CERAMIC 100nF +/-10% 50V X7R/2C1, MULTILAYER, SURFACE-MOUNTED, SIZE 1206, NICKEL	ROHM ELECTRONICS LTD	MCH31-5C-104-KP
C13 to C15	26386/875	CAPACITOR-FIXED CERAMIC 10nF +/-10% 50V X7R/2C1, MULTILAYER, SURFACE-MOUNTED, SIZE 0805, NICKEL	ROHM ELECTRONICS LTD	MCH21-5C-103-KP
C16	26386/764	CAPACITOR-FIXED CERAMIC 47pF +/-5% 50V 60 ppm/DEG.C, HIGH-Q, SINGLELAYER, SURFACE-MOUNTED,	AVX LTD	0805-5K-470-JAW
C17	26386/973	CAPACITOR-FIXED CERAMIC 3.3pF +/-0.1pF 50V 60 ppm/DEG.C, HIGH-Q, SINGLELAYER, SURFACE-MOUNTED,	AVX LTD	0805-5K-3R3-BAW-TR
C18	26386/971	CAPACITOR-FIXED CERAMIC 2.2pF +/-0.1pF 50V 60 ppm/DEG.C, HIGH-Q, SINGLELAYER, SURFACE-MOUNTED,	AVX LTD	0805-5K-2R2-BAW-TR
C19	26386/780	CAPACITOR-FIXED CERAMIC 82pF +/-5% 25V 60 ppm/DEG.C, HIGH-Q, SINGLELAYER, SURFACE-MOUNTED,	AVX LTD	0805-3K-820-JAW
C20	26386/897	CAPACITOR-FIXED CERAMIC 4.7pF +/-0.1pF 50V 60 ppm/DEG.C, HIGH-Q, SINGLELAYER, SURFACE-MOUNTED,	AVX LTD	0805-5K4R7-BAW-TR
C21	26386/764	CAPACITOR-FIXED CERAMIC 47pF +/-5% 50V 60 ppm/DEG.C, HIGH-Q, SINGLELAYER, SURFACE-MOUNTED,	AVX LTD	0805-5K-470-JAW
C22	26386/973	CAPACITOR-FIXED CERAMIC 3.3pF +/-0.1pF 50V 60 ppm/DEG.C, HIGH-Q, SINGLELAYER, SURFACE-MOUNTED,	AVX LTD	0805-5K-3R3-BAW-TR
C23	26386/762	CAPACITOR-FIXED CERAMIC 22pF +/-5% 50V 60 ppm/DEG.C, HIGH-Q, SINGLELAYER, SURFACE-MOUNTED,	AVX LTD	0805-5K-220-JAW
C24	26386/969	CAPACITOR-FIXED CERAMIC 1pF +/- 0.1pF 50V 60 ppm/DEG.C, HIGH-Q, SINGLELAYER, SURFACE-MOUNTED,	AVX LTD	0805-5K-1R0-BAW-TR
C25	26386/762	CAPACITOR-FIXED CERAMIC 22pF +/-5% 50V 60 ppm/DEG.C, HIGH-Q, SINGLELAYER, SURFACE-MOUNTED,	AVX LTD	0805-5K-220-JAW
C26	26386/973	CAPACITOR-FIXED CERAMIC 3.3pF +/-0.1pF 50V 60 ppm/DEG.C, HIGH-Q, SINGLELAYER, SURFACE-MOUNTED,	AVX LTD	0805-5K-3R3-BAW-TR
C27	26386/766	CAPACITOR-FIXED CERAMIC 15pF +/-5% 100V 60 ppm/DEG.C, HIGH-Q, SINGLELAYER, SURFACE-MOUNTED,	AVX LTD	0805-1K-150-JAW-TR
C28	26386/875	CAPACITOR-FIXED CERAMIC 10nF +/-10% 50V X7R/2C1, MULTILAYER, SURFACE-MOUNTED, SIZE 0805, NICKEL	ROHM ELECTRONICS LTD	MCH21-5C-103-KP

Cir. Ref.	MI part number	Description	Manufacturer	Manufacturer's part number
BFO board C5 (contd.)				
IC1	28531/015	RF-MIXER DOUBLE-BALANCED, DIODE RING, RMS-2... 5-1000MHz, 50R 1 dBm RF-1dB COMPRESS, 9.5 dB LOSS,	MINI-CIRCUITS	RMS-2
IC2	28461/447	IC-ANALOGUE MICROWAVE-AMP MSA-0886... 7.8V 36mA GAIN 22.5dB @1GHz, 25dB BNDWIDTH DC-5GHz, BIPOLAR,	HEWLETT-PACKARD	MSA-0886-TR1
IC3	28469/563	IC-DIGITAL DIVIDER uPB585G... DIVIDE BY 4, 2.5GHz, PRESCALER, MONOLITHIC, 8 PIN, SMALL-OUTLINE.	NEC ELECTRONICS LTD	uPB585G
IC4	28461/450	IC-ANALOGUE MICROWAVE-AMP MSA-0486... 5.25V 50mA GAIN 8dB @ 1GHz, 3dB BANDWIDTH DC-3.2GHz, BIPOLAR,	HEWLETT-PACKARD	MSA-0486-TR1
L1	23642/516	INDUCTOR-FIXED 0.022uH +/- 10% EPOXY-MOULD, 450mA 0R2 MAX, 23 Q @ 100 MHz, 1.7K MHz SRF, SURFACE	MEGGITT ELECTRONICS	3612-T-022-K
L2	23642/728	INDUCTOR-FIXED 68uH +/- 10% EPOXY-MOULD, 220mA 2R6 MAX, 10 Q @ 2.52 MHz, 10 MHz SRF, SURFACE MOUNTED,	TDK UK LTD	NLC453232T-680K
L3	23642/516	INDUCTOR-FIXED 0.022uH +/- 10% EPOXY-MOULD, 450mA 0R2 MAX, 23 Q @ 100 MHz, 1.7K MHz SRF, SURFACE	MEGGITT ELECTRONICS	3612-T-022-K
L4	23642/728	INDUCTOR-FIXED 68uH +/- 10% EPOXY-MOULD, 220mA 2R6 MAX, 10 Q @ 2.52 MHz, 10 MHz SRF, SURFACE MOUNTED,	TDK UK LTD	NLC453232T-680K
L5	23642/511	INDUCTOR-FIXED 0.12uH +/- 20% EPOXY-MOULD, 450mA 0R22 MAX, 30 Q @ 25.2 MHz, 500 MHz SRF, SURFACE	MEGGITT ELECTRONICS	3612-T-R12-M
L6	23642/511	INDUCTOR-FIXED 0.12uH +/- 20% EPOXY-MOULD, 450mA 0R22 MAX, 30 Q @ 25.2 MHz, 500 MHz SRF, SURFACE	MEGGITT ELECTRONICS	3612-T-R12-M
L7	23642/519	INDUCTOR-FIXED 0.068uH +/- 5% EPOXY-MOULD, 450mA 0R36 MAX, 27 Q @ 100 MHz, 1K MHz SRF, SURFACE	MEGGITT ELECTRONICS	3612-T-068-J
L8	23642/516	INDUCTOR-FIXED 0.022uH +/- 10% EPOXY-MOULD, 450mA 0R2 MAX, 23 Q @ 100 MHz, 1.7K MHz SRF, SURFACE	MEGGITT ELECTRONICS	3612-T-022-K
PLA	23435/188	TERMINAL CONNECTOR-PIN, 0.64mm SQUARE, 5.97mm HIGH, PCB-MOUNTING, SINGLE-ENDED, PHOSPHOR BRONZE,	BERG ELECTRONICS	75401-001
R1	24811/141	RESISTOR-FIXED METAL-FILM 47R5 +/- 1% 250mW 200V 50 ppm/DEG.C, SURFACE MOUNTED, SIZE MINI-MELF,	VISHAY COMPONENTS	SMM0204-47R5-1%50ppm
R2	24811/150	RESISTOR-FIXED METAL-FILM 110R +/- 1% 250mW 200V 50 ppm/DEG.C, SURFACE MOUNTED, SIZE MINI-MELF,	VISHAY COMPONENTS	SMM0204-110R-1%50ppm
R3	24811/151	RESISTOR-FIXED METAL-FILM 121R +/- 1% 250mW 200V 50 ppm/DEG.C, SURFACE MOUNTED, SIZE MINI-MELF,	VISHAY COMPONENTS	SMM0204-121R-1%50ppm
R4	24811/142	RESISTOR-FIXED METAL-FILM 51R1 +/- 1% 250mW 200V 50 ppm/DEG.C, SURFACE MOUNTED, SIZE MINI-MELF,	VISHAY COMPONENTS	SMM0204-51R1-1%50ppm
R5	24811/151	RESISTOR-FIXED METAL-FILM 121R +/- 1% 250mW 200V 50 ppm/DEG.C, SURFACE MOUNTED, SIZE MINI-MELF,	VISHAY COMPONENTS	SMM0204-121R-1%50ppm
R6	24811/153	RESISTOR-FIXED METAL-FILM 150R +/- 1% 250mW 200V 50 ppm/DEG.C, SURFACE MOUNTED, SIZE MINI-MELF,	VISHAY COMPONENTS	SMM0204-150R-1%50ppm
R7	24811/156	RESISTOR-FIXED METAL-FILM 200R +/- 1% 250mW 200V 50 ppm/DEG.C, SURFACE MOUNTED, SIZE MINI-MELF,	VISHAY COMPONENTS	SMM0204-200R-1%50ppm
TP4 to TP6	23435/188	TERMINAL CONNECTOR-PIN, 0.64mm SQUARE, 5.97mm HIGH, PCB-MOUNTING, SINGLE-ENDED, PHOSPHOR BRONZE,	BERG ELECTRONICS	75401-001

Cir. Ref.	MI part number	Description	Manufacturer	Manufacturer's part number

RF tray interconnection PCB (signal generator) C6

When ordering, prefix circuit reference with C6.

	44830-108	Complete unit	Issue D	
[illegible]	[illegible]	CAPACITOR-FIXED CERAMIC 10nF +/-10% 50V X7R/2C1, MULTILAYER, SURFACE-MOUNTED, SIZE 0805, NICKEL	ROHM ELECTRONICS LTD	MCH21-5C-103-KP
[illegible]	[illegible]	CAPACITOR-FIXED ALUMINIUM 47uF +/-20% 16V ELECTROLYTIC, SURFACE-MOUNTED, SIZE 6.6 x 6.6mm,	PANASONIC INDUSTRIAL	ECE-V-1CA-470P
[illegible]	[illegible]	CAPACITOR-FIXED CERAMIC 100nF +/-10% 50V X7R/2C1, MULTILAYER, SURFACE-MOUNTED, SIZE 1206, NICKEL	ROHM ELECTRONICS LTD	MCH31-5C-104-KP
IC1	28462/638	IC-DIGITAL FLIP-FLOP/D-TYPE 74HC74... 2 BIT, DUAL, POS EDGE TRIGGER, PLUS SET & CLEAR, CMOS-H/SPEED,	PHILIPS	74HC74D
IC2	28465/055	IC-DIGITAL DECODER/DEMULTIPLEX 74HC138... 3 INPUT, 8 BIT, SINGLE, INVERTING, 3 BIT ADDRESS,	PHILIPS	74HC138D
IC3	28462/157	IC-DIGITAL FLIP-FLOP/D-TYPE 74HC377... OCTAL, POS EDGE TRIGGER WITH DATA ENABLE, CMOS-H/SPEED, 20	PHILIPS	74HC377D
IC4	28462/157	IC-DIGITAL FLIP-FLOP/D-TYPE 74HC377... OCTAL, POS EDGE TRIGGER WITH DATA ENABLE, CMOS-H/SPEED, 20	PHILIPS	74HC377D
IC5	28461/411	IC-ANALOGUE OPERATIONAL AMP TL071... SINGLE, JFET INPUT, LOW NOISE, 8 PIN, SMALL-OUTLINE.	MOTOROLA INC.	TL071CD
IC6	28461/411	IC-ANALOGUE OPERATIONAL AMP TL071... SINGLE, JFET INPUT, LOW NOISE, 8 PIN, SMALL-OUTLINE.	MOTOROLA INC.	TL071CD
L1 to [illegible]	23642/512	INDUCTOR-FIXED 22uH +/- 5% EPOXY-MOULD, 110mA 3R7 MAX, 30 Q @ 2.5 MHz, 25 MHz SRF, SURFACE MOUNTED,	MEGGITT ELECTRONICS	3612-T-220-J
PLA	23437/053	CONNECTOR MULTIWAY, PCB HEADER, 14 WAY, RIGHT ANGLED, 2-ROW, 2.54mm GRID, TO ACCEPT LATCHING	BERG ELECTRONICS	75867-302
R1	24811/177	RESISTOR-FIXED METAL-FILM 1K5 +/- 1% 250mW 200V 50 ppm/DEG.C, SURFACE MOUNTED, SIZE MINI-MELF, (8mm	VISHAY COMPONENTS	SMM0204-1K5-1%50ppm
R2	24811/177	RESISTOR-FIXED METAL-FILM 1K5 +/- 1% 250mW 200V 50 ppm/DEG.C, SURFACE MOUNTED, SIZE MINI-MELF, (8mm	VISHAY COMPONENTS	SMM0204-1K5-1%50ppm
R3	24811/197	RESISTOR-FIXED METAL-FILM 10K +/- 1% 250mW 200V 50 ppm/DEG.C, SURFACE MOUNTED, SIZE MINI-MELF, (8mm	VISHAY COMPONENTS	SMM0204-10K-1%50ppm
R4	24811/201	RESISTOR-FIXED METAL-FILM 15K +/- 1% 250mW 200V 50 ppm/DEG.C, SURFACE MOUNTED, SIZE MINI-MELF, (8mm	VISHAY COMPONENTS	SMM0204-15K-1%50ppm
R5	24811/154	RESISTOR-FIXED METAL-FILM 162R +/- 1% 250mW 200V 50 ppm/DEG.C, SURFACE MOUNTED, SIZE MINI-MELF,	VISHAY COMPONENTS	SMM0204-162R-1%50ppm
R6	24811/154	RESISTOR-FIXED METAL-FILM 162R +/- 1% 250mW 200V 50 ppm/DEG.C, SURFACE MOUNTED, SIZE MINI-MELF,	VISHAY COMPONENTS	SMM0204-162R-1%50ppm
R7	24811/181	RESISTOR-FIXED METAL-FILM 2K21 +/- 1% 250mW 200V 50 ppm/DEG.C, SURFACE MOUNTED, SIZE MINI-MELF,	VISHAY COMPONENTS	SMM0204-2K21-1%50ppm

Cir. Ref.	MI part number	Description	Manufacturer	Manufacturer's part number
RF tray interconnection PCB (signal generator) C6 (contd.)				
R8	24811/154	RESISTOR-FIXED METAL-FILM 162R +/- 1% 250mW 200V 50 ppm/DEG.C, SURFACE MOUNTED, SIZE MINI-MELF,	VISHAY COMPONENTS	SMM0204-162R-1%50ppm
R9	24811/154	RESISTOR-FIXED METAL-FILM 162R +/- 1% 250mW 200V 50 ppm/DEG.C, SURFACE MOUNTED, SIZE MINI-MELF,	VISHAY COMPONENTS	SMM0204-162R-1%50ppm
R10	24811/181	RESISTOR-FIXED METAL-FILM 2K21 +/- 1% 250mW 200V 50 ppm/DEG.C, SURFACE MOUNTED, SIZE MINI-MELF,	VISHAY COMPONENTS	SMM0204-2K21-1%50ppm
R11	24811/190	RESISTOR-FIXED METAL-FILM 5K11 +/- 1% 250mW 200V 50 ppm/DEG.C, SURFACE MOUNTED, SIZE MINI-MELF,	VISHAY COMPONENTS	SMM0204-5K11-1%50ppm
R12	24811/178	RESISTOR-FIXED METAL-FILM 1K62 +/- 1% 250mW 200V 50 ppm/DEG.C, SURFACE MOUNTED, SIZE MINI-MELF,	VISHAY COMPONENTS	SMM0204-1K62-1%50ppm
R13	24811/177	RESISTOR-FIXED METAL-FILM 1K5 +/- 1% 250mW 200V 50 ppm/DEG.C, SURFACE MOUNTED, SIZE MINI-MELF, (8mm	VISHAY COMPONENTS	SMM0204-1K5-1%50ppm
R14	24811/137	RESISTOR-FIXED METAL-FILM 33R2 +/- 1% 250mW 200V 50 ppm/DEG.C, SURFACE MOUNTED, SIZE MINI-MELF,	VISHAY COMPONENTS	SMM0204-33R2-1%50ppm
R15	24811/137	RESISTOR-FIXED METAL-FILM 33R2 +/- 1% 250mW 200V 50 ppm/DEG.C, SURFACE MOUNTED, SIZE MINI-MELF,	VISHAY COMPONENTS	SMM0204-33R2-1%50ppm
R16	24811/173	RESISTOR-FIXED METAL-FILM 1K +/- 1% 250mW 200V 50 ppm/DEG.C, SURFACE MOUNTED, SIZE MINI-MELF, (8mm	VISHAY COMPONENTS	SMM0204-1K0-1%-50ppm
TP1 to TP4	23435/188	TERMINAL CONNECTOR-PIN, 0.64mm SQUARE, 5.97mm HIGH, PCB-MOUNTING, SINGLE-ENDED, PHOSPHOR BRONZE,	BERG ELECTRONICS	75401-001
TR1	28435/229	TRANSISTOR PNP BIPOLAR BCX51... 45V 50MHz 1W 1A 40hFE @ 250mA, SURFACE MOUNTED, SOT-89, (12mm TAPE	PHILIPS	BCX51
TR2	28455/302	TRANSISTOR NPN BIPOLAR BCX54... 45V 130MHz 1W 1A 40hFE MIN @ 150mA, MARKING CODE BA, SURFACE	PHILIPS	BCX54
TR3	28435/229	TRANSISTOR PNP BIPOLAR BCX51... 45V 50MHz 1W 1A 40hFE @ 250mA, SURFACE MOUNTED, SOT-89, (12mm TAPE	PHILIPS	BCX51
TR4	28455/302	TRANSISTOR NPN BIPOLAR BCX54... 45V 130MHz 1W 1A 40hFE MIN @ 150mA, MARKING CODE BA, SURFACE	PHILIPS	BCX54
TR5	28435/229	TRANSISTOR PNP BIPOLAR BCX51... 45V 50MHz 1W 1A 40hFE @ 250mA, SURFACE MOUNTED, SOT-89, (12mm TAPE	PHILIPS	BCX51

Cir. Ref.	MI part number	Description	Manufacturer	Manufacturer's part number

Voltage controlled oscillator AF3

When ordering, prefix circuit reference with AF3.

	44829-853	Complete unit	Issue 6	
C1	26386/897	CAPACITOR-FIXED CERAMIC 4.7pF +/-0.1pF 50V 60 ppm/DEG.C, HIGH-Q, SINGLELAYER, SURFACE-MOUNTED,	AVX LTD	0805-5K4R7-BAW-TR
C2	26386/830	CAPACITOR-FIXED CERAMIC 330pF +/-5% 50V NP0 MULTILAYER, SURFACE-MOUNTED, SIZE 0805, NICKEL	ROHM ELECTRONICS LTD	MCH21-5A-331-JP
C3	26386/830	CAPACITOR-FIXED CERAMIC 330pF +/-5% 50V NP0 MULTILAYER, SURFACE-MOUNTED, SIZE 0805, NICKEL	ROHM ELECTRONICS LTD	MCH21-5A-331-JP
C4	26386/975	CAPACITOR-FIXED CERAMIC 6.8pF +/-0.1pF 50V 60 ppm/DEG.C, HIGH-Q, SINGLELAYER, SURFACE-MOUNTED,	AVX LTD	0805-5K-6R8-BAW-TR
C5	26386/830	CAPACITOR-FIXED CERAMIC 330pF +/-5% 50V NP0 MULTILAYER, SURFACE-MOUNTED, SIZE 0805, NICKEL	ROHM ELECTRONICS LTD	MCH21-5A-331-JP
C6	26386/830	CAPACITOR-FIXED CERAMIC 330pF +/-5% 50V NP0 MULTILAYER, SURFACE-MOUNTED, SIZE 0805, NICKEL	ROHM ELECTRONICS LTD	MCH21-5A-331-JP
C7	26386/808	CAPACITOR-FIXED CERAMIC 4.7pF +/-0.5pF 50V NPO MULTILAYER, SURFACE-MOUNTED, SIZE 0805, NICKEL	ROHM ELECTRONICS LTD	MCH21-5A-4R7-DP
C8	26343/753	CAPACITOR-FIXED CERAMIC 6.8pF +/-0.5pF 50V NPO MULTILAYER, SURFACE-MOUNTED, SIZE 0805, NICKEL	ROHM ELECTRONICS LTD	MCH21-5A-6R8-DP
C9	[illegible]	CAPACITOR-FIXED CERAMIC 1.8pF +/-0.5pF 50V NP0 MULTILAYER, SURFACE-MOUNTED, SIZE 0805, NICKEL	ROHM ELECTRONICS LTD	MCH21-5A-1R8-DP
C10	[illegible]	CAPACITOR-FIXED CERAMIC 5.6pF +/-0.1pF 50V 60 ppm/DEG.C, HIGH-Q, SINGLELAYER, SURFACE-MOUNTED,	AVX LTD	0805-5K5R6-BAW-TR
D1	28381/133	DIODE VARIABLE CAPACITNCE, BB515... 30V 20mA 2.1pF @ 28V, CAPAC RATIO 8.0 MIN, SURFACE MOUNTED,	SIEMENS LTD	BB515-B
D2	28381/133	DIODE VARIABLE CAPACITNCE, BB515... 30V 20mA 2.1pF @ 28V, CAPAC RATIO 8.0 MIN, SURFACE MOUNTED,	SIEMENS LTD	BB515-B
D3	28383/961	DIODE PIN, BAR16-1... DUAL, 140mW 100V 100mA 0.5pF 1.25V! @ 100mA, COMMON ANODE, MARKING CODE L9,	SIEMENS LTD	BAR16-1
L1	23642/703	INDUCTOR-FIXED 0.47uH +/- 10% EPOXY-MOULD, 450mA 0R5 MAX, 30 Q @ 25.2 MHz, 220 MHz SRF, SURFACE	MEGGITT ELECTRONICS	3612-T-R47-K
L2	23642/703	INDUCTOR-FIXED 0.47uH +/- 10% EPOXY-MOULD, 450mA 0R5 MAX, 30 Q @ 25.2 MHz, 220 MHz SRF, SURFACE	MEGGITT ELECTRONICS	3612-T-R47-K
R1	24772/057	RESISTOR-FIXED METAL-FILM 220R +/- 2% 125mW 150V 100 ppm/DEG.C, AXIAL, (TAPED).	VISHAY COMPONENTS	NK3-220R-2%
R2	24772/057	RESISTOR-FIXED METAL-FILM 220R +/- 2% 125mW 150V 100 ppm/DEG.C, AXIAL, (TAPED).	VISHAY COMPONENTS	NK3-220R-2%
R3 to R6	24811/901	RESISTOR-FIXED METAL-FILM 10R +/- 1% 250mW 200V 50 ppm/DEG.C, LOW-INDUCTANCE, SURFACE MOUNTED, SIZE	VISHAY COMPONENTS	SMM0204-HF-10R-1%
R7	24772/067	RESISTOR-FIXED METAL-FILM 560R +/- 2% 125mW 150V 100 ppm/DEG.C, AXIAL, (TAPED).	VISHAY COMPONENTS	NK3-560R-2%
R8	24772/060	RESISTOR-FIXED METAL-FILM 300R +/- 2% 125mW 150V 100 ppm/DEG.C, AXIAL, (LOOSE OR TAPED).	VISHAY COMPONENTS	NK3-270R-2%

R9	24811/173	RESISTOR-FIXED METAL-FILM 1K +/- 1% 250mW 200V 50 ppm/DEG.C, SURFACE MOUNTED, SIZE MINI-MELF, (8mm	VISHAY COMPONENTS SMM0204-1K0-1%-50ppm
R10	24811/173	RESISTOR-FIXED METAL-FILM 1K +/- 1% 250mW 200V 50 ppm/DEG.C, SURFACE MOUNTED, SIZE MINI-MELF, (8mm	VISHAY COMPONENTS SMM0204-1K0-1%-50ppm
R11	24811/159	RESISTOR-FIXED METAL-FILM 274R +/- 1% 250mW 200V 50 ppm/DEG.C, SURFACE MOUNTED, SIZE MINI-MELF,	VISHAY COMPONENTS SMM0204-274R-1%50ppm
SKA	23436/740	CONNECTOR MULTIWAY, SOCKET, 5 WAY, STRAIGHT, 2.54mm PITCH, PCB MOUNTING, CONTACTS GOLD PLATED	BERG ELECTRONICS 76308-105
SKB	23436/740	CONNECTOR MULTIWAY, SOCKET, 5 WAY, STRAIGHT, 2.54mm PITCH, PCB MOUNTING, CONTACTS GOLD PLATED	BERG ELECTRONICS 76308-105
TR1	28487/809	TRANSISTOR NPN BIPOLAR BFR93A... 12V 5GHz 250mW 35mA 40hFE MIN @ 30mA, MARKING CODE R2, SURFACE	PHILIPS BFR93A
TR2	28487/809	TRANSISTOR NPN BIPOLAR BFR93A... 12V 5GHz 250mW 35mA 40hFE MIN @ 30mA, MARKING CODE R2, SURFACE	PHILIPS BFR93A

MECHANICAL COMPONENTS

Introduction

Each sub-assembly or printed circuit board in this equipment has been allocated a reference designator code, e.g. A0, A1, A2 etc.

The complete component reference includes its reference designator as a prefix e.g. A2C1 (capacitor C1 on sub-assembly A2) but for convenience in the text and diagrams, the prefix is omitted unless it is needed to avoid confusion. However, when ordering replacements or in correspondence, the complete component reference should be quoted.

Component values

One or more of the components fitted in the equipment may differ from those listed in this chapter for any of the following reasons:

(a) Components indicated by an * (or SIC) have their values selected during test to achieve particular performance limits.

(b) Owing to supply difficulties, components of different value or type may be substituted provided the overall performance of the equipment is maintained.

(c) As part of a policy of continuous development, components may be changed in value or type to obtain detail improvements in performance.

When there is a difference between the component fitted and the one listed, always use as a replacement the same type and value as found in the equipment.

The Component List includes information about one source of manufacture for each part along with that manufacturer's part number. Sources other than those listed may have been used to supply parts used in your equipment. Alternative replacement devices can often be obtained from other manufacturers but the user must satisfy himself that the items are equivalent in all significant parameters before fitting to the equipment. Where the manufacturer is listed as Marconi Instruments, the part can only be obtained from our Service Division or your nearest Agent.

Ordering

When ordering replacements, address the order to our Service Division (address at rear of manual) or nearest agent and specify the following for each component required:-

(1) Type and serial number of equipment, as given on the serial number label at the rear of the equipment. If this is superseded by a model number label, quote the model number instead of the type number.

(2) Complete circuit reference.

(3) Description.

(4) Part number.

Cir. Ref.	MI part number	Qty	Description

Overall assembly A0

When ordering, prefix circuit reference with A0.

44991/200 Complete unit Issue J

ASSEMBLY NO : 44991/200 CURR,DRAFT,PROV : C OTHER : WEEK :

A3	A 43138/443	REF ONLY EA	RF-CABLE-FLEXIBLE RG178B/U, 50 OHMS, CRIMP SKT : St 3 Iss 004 M/S D/I HOUSING 2 WAY, - CRIMP SKT HOUSING 2 WAY, 230mm LONG, SLEEVES FITTED.
A4	A 43138/444	REF ONLY EA	RF-CABLE-FLEXIBLE RG178B/U, 50 OHMS, CRIMP SKT : St 3 Iss 004 M/S D/I HOUSING 7 WAY, KEY 2 - CRIMP SKT HOUSING 2 WAY, 3-OFF, 970mm LONG, SLEEVES FITTED.
A5	A 43138/445	REF ONLY EA	RF-CABLE-FLEXIBLE RG178B/U, 50 OHMS, CRIMP SKT : St 3 Iss 005 M/S D/I HOUSING 7 WAY, KEY 6 - CRIMP SKT HOUSING 2 WAY, 3-OFF, 845mm LONG, SLEEVES FITTED.
A6	A 43138/446	REF ONLY EA	RF-CABLE-FLEXIBLE RG178B/U, 50 OHMS, CRIMP SKT : St 3 Iss 003 M/S D/I HOUSING 3 WAY, - CRIMP SKT HOUSING 2 WAY, 745mm LONG, SLEEVE FITTED.
A7	A 43138/447	REF ONLY EA	RF-CABLE-FLEXIBLE RG178B/U, 50 OHMS, CRIMP SKT : St 3 Iss 004 M/S D/I HOUSING 5 WAY, KEY 4 - CRIMP SKT HOUSING 2 WAY, 2-OFF, 652mm & 675mm LONG, SLEEVES FITTED.
A8	A 43138/448	REF ONLY EA	RF-CABLE-FLEXIBLE RG178B/U, 50 OHMS, CRIMP SKT : St 3 Iss 004 M/S D/I HOUSING 3 WAY, - CRIMP SKT HOUSING 2 WAY, 760mm LONG, SLEEVE FITTED.
A9	A 43138/485	REF ONLY EA	RF-CABLE-FLEXIBLE RG178B/U, 50 OHMS, CRIMP SKT : St 3 Iss 003 M/S D/I HOUSING 4 WAY, KEY POS 3, - CRIMP SKT HOUSING 2 WAY, 219mm LONG, SLEEVE FITTED.
011	A 17550/018	1 EA	LABEL BLANK, COMPUTER PRINT, 50.8mm LONG, 12mm : St 3 Iss M/S D/I WIDE, SELF ADHESIVE, ALUMINIUM POLYESTER, 3 PER ROW 12 ROWS PER 12in FANFOLD, PACKS OF 3000/6000.
015	A 17550/732	0.0001EA	TAPE POLYURETHANE-FOAM, OPEN-CELL, 0.25 in WIDE, : St 1 Iss M/S D/I 0.031 in THK, DOUBLE-SIDED, SELF-ADHESIVE, ON 66M ROLLS.
020	A 44533/433	1 EA	IC-PROGRAMMED EPROM, SET OF 2, 2945. : St 3 Iss 008 M/S D/I
021	A 44533/434	1 EA	!IC3 AUDIO GEN. IC-PROGRAMMED EPROM, SET OF 1, 2945, WAVEFORM : St 3 Iss 001 M/S D/I GENERATOR 1.
022	A 44533/435	1 EA	!IC4 AUDIO GEN. IC-PROGRAMMED EPROM, SET OF 1, 2945, WAVEFORM : St 3 Iss 001 M/S D/I GENERATOR 2.
029	J 44991/132	1 EA	POWER LOAD (2945): St 0 Iss 005 M/S D/I
031	A 44429/080	1 EA	ATTENUATOR ASSY 3 STAGE RELAY (2945): St 0 Iss 005 M/S D/I
032	A 44429/081	1 EA	ATTENUATOR ASSY 2 STAGE RELAY (2945): St 0 Iss 005 M/S D/I
038	H 44830/180	1 EA	PCB-ASSEMBLY AUDIO PROCESSOR B1-2 (2945A): St 0 Iss 001 M/S D/I
041	A 44830/110	1 EA	PCB-ASSEMBLY MIXED TECHNOLOGY, 2945, B2/1, : St 3 Iss 002 M/S D/I MICROPROCESSOR.

Cir. Ref.	MI part number	Qty	Description
Overall assembly A0 (contd.)			
046	H 21833/006	4 EA	SCREW METRIC-SEMS PAN-HEAD POZIDRIVE, M3, 16 mm : St 1 Iss M/S D/I LONG, STEEL BRIGHT NICKEL PLATE BS.3382, SPRING WASHER, ISO-COARSE-THRD, RECESS No1, BS.3643&4183.
047	H 21882/108	4 EA	NUT METRIC, FULL, HEXAGONAL, M3, 5.5mm A/F, 2.4mm : St 1 Iss M/S D/I THK, STEEL, ZINC PL & PASS, TO BS.3382-PT.2, ISO-METRIC-COARSE THREAD BS.3643 & 3692.
050	D 44991/208	1 EA	RF TRAY INTERCON PCB/RIBBON PCB & RIBBON CABLE ASSY. (2947): St 0 Iss 001 M/S D/I
056	D 31519/176	1 EA	SPEAKER GASKET PAD NEOPRENE, CLOSED CELL, BLACK, SPEAKER GASKET, : St 3 Iss 004 M/S D/I SELF-ADHESIVE, 6 mm THK MATL, 50mm O/DIA, 40mm I/DIA.
056.5	B 31739/951	1 EA	LABEL-MARKED POLYESTER, MARKING"THIS PRODUCT IS : St 3 Iss 002 M/S D/I PROTECTED BY THE FOLLOWING PATENTS-", BLACK ON ALUMINIUM, SELF ADHESIVE, 50.8mm LNG, 22.86mm WDE.
060	A 21262/713	4 EA	SCREW SELF-TAP-TYPE.B PAN-HEAD POZIDRIVE, No.4, : St 3 Iss M/S D/I 0.25 in LONG, STEEL HARDENED, ZINC-PL & PASS TO BS.3382-PT.2, T.P.I.-24, BS.4174.
063	A 21171/808	4 EA	WASHER METRIC, PLAIN, M3, 8.0mm O/D, 3.2mm I/D, : St 2 Iss M/S D/I 0.8mm THK, NYLON, FINISH AS FROM TOOL, WHITE/OPAQUE.
065	J 35907/683	1 EA	FABRICATED-PART FERROMAGNETIC FOIL, MAGNETIC : St 3 Iss 001 M/S D/I SHIELD, CLEAN FINISH, 0.1 mm THK MATL, 45mm LONG, 30mm WIDE.
066	J 35904/655	1 EA	FABRICATED-PART FERROMAGNETIC FOIL, MAGNETIC : St 3 Iss 002 M/S D/I SHIELD, CLEAN FINISH, 0.1 mm THK MATL, 140mm LONG, 75mm WIDE.
068	D 35907/017	1 EA	CASE, LESS HANDLE AND FEET FABRICATED-PART ALUMINIUM, COVER INSTRUMENT, : St 3 Iss 007 M/S D/I PAINTED, MID GREY, TEXTURD, 1.6 mm THK MATL, 364mm LG, 345mm WD, 155mm HI, M4 FIXED NUTS, SPOTWELDED.
069	H 41590/282	1 EA	HANDLE BAIL-ARM-TYPE, 357 mm FIXING CENTRES, 176mm: St 2 Iss 004 M/S D/I HIGH, ALUMINIUM, PAINTED, LIGHT & MID GREY, WITH 30DEG RATCHET MECHANISMS & BLACK SLEEVING-FITTED.
070	A 34902/250	2 EA	MACHINED-PART RECTANGULAR, SIDE PLATE FRONT, : St 3 Iss 001 M/S D/I ALUMINIUM, PAINTED, LIGHT GREY, 152mm LONG, 85mm WIDE, 9.55mm HIGH, M4 TAPPED, M4 FIXED NUT FITTED.
071	A 37591/682	4 EA	MOULDED-PART RUBBER, PROTECTION BUMPER, MID-GREY, : St 3 Iss 001 M/S D/I SHORE HARDNESS 60, 53.9mm LONG, 9mm WIDE, 21mm HIGH.
072	H 21186/958	1 EA	FASTENER SHAFT FIXING, PUSH-ON, DOME CAP, ROUND, : St 4 Iss M/S D/I 12.45mm O/DIA, FOR 5mm DIA SHAFT, SPRING STEEL, BRONZE & VARNISH, ALUMINIUM CAP.
074	A 35907/226	1 EA	FABRICATED-PART ALUMINIUM, CHASSIS, ALOCROM-1000 : St 3 Iss 004 M/S D/I FINISH, 1.6 mm THK MATL, 323.2mm LONG, 226.5mm WIDE, 50.5mm HIGH, M3 & M4 FIXED NUTS FITTED.
075	H 35907/680	1 EA	FABRICATED-PART ALUMINIUM, MAIN FRAME CHASSIS, : St 3 Iss 002 M/S D/I MARKD, ALOCROM-1000 FINISH, 1.6 mm THK MATL, 360.5 mmLG, 337mmWD, 147mmHI, M STUDS & M3/M4 FIX NUTS.

Cir. Ref.	MI part number	Qty	Description
Overall assembly A0 (contd.)			
077	D 37591/654	1 EA	SET OF RUBBER BUMPERS AND FEET MOULDED-PART RUBBER, SET OF BUMPERS & FEET, : St 3 Iss 003 M/S D/I MID-GREY, COMPRISING 4-REAR FEET, 2 FRONT BUMPER LH & 2 FRONT BUMPER RH, EACH SET PACKED IN BAG.
078	A 33901/716	8 EA	MACHINED-PART ROUND, INSERT REAR FOOT, ALUMINIUM, : St 3 Iss 001 M/S D/I ALOCROM-1000 FINISH, 6mm O/DIA, 4.4mm I/DIA, 6mm LONG.
080	D 13880/207	1.1 M	RFI GASKET, REAR PANEL TO CASE GASKET-RF CORED-KNITTED, CONDUCTIVE-YARN, OVER : St 4 Iss M/S D/I FOAM URETHANE CORE, 6.35mm SQUARE, SELF ADHESIVE BACKING, ON 500 FOOT - 150 METRE REELS.
081	K 17510/299	REF ONLY EA	ADHESIVE CYANOACRYLATE, HIGH VISCOSITY : St 4 Iss M/S D/I 1500-2500mPas, GAP FILL TO 0.375mm, IN 500 GRAM DISPENSER BOTTLE WITH NOZZLE.
082	A 18710/261	0.001 EA	ADHESIVE ANAEROBIC, SCREW-LOCK, PURPLE, FOR LOW : St 1 Iss M/S D/I STRENGTH THREAD LOCKING, BREAKAWAY TORQUE 3-11Nm, IN 10mL BOTTLES.
083	J 17550/551	0.0121EA	TAPE POLYESTER, 25 mm WIDE, 0.025 mm THK, : St 9 Iss M/S D/I DOUBLE-SIDED, SELF-ADHESIVE, ON 33M ROLLS.
094	A 21888/922	2 EA	PILLAR HEXAGONAL, THREAD MALE/FEMALE, M3, 5 mm : St 1 Iss M/S D/I A/F, 10 mm BODY LENGTH, 5 mm TAP DEPTH, 8 mm THREAD LENGTH, BRASS, ELECTRO-NICKEL PLTE.
095	A 21171/108	5 EA	WASHER METRIC, PLAIN, M3, 7.0mm O/D, 3.2mm I/D, : St 1 Iss M/S D/I 0.5mm THK, STEEL, ZINC PL & PASS, TO BS.1706, BS.4320.
097	A 21171/815	1 EA	WASHER METRIC, PLAIN, INSULATING, LARGE, 22.6mm : St 2 Iss M/S D/I O/D, 9.5mm I/D, 0.53mm THK, NYLON, NATURAL, CLEAN FINISH.
098	E 21177/650	2 EA	WASHER METRIC, CRINKLE, M4, 8.1mm O/D, 4.3mm I/D, : St 1 Iss M/S D/I 0.28mm THK, 0.69mm MIN SET, BERYLLIUM COPPER, NICKL+ZINC PL &PASS, TO BS.1706, BS.4463.
100	A 21177/210	4 EA	WASHER METRIC, SHAKEPROOF, INTERNAL-TEETH, M3, : St 4 Iss M/S D/I SPRING STEEL, ZINC PL & PASS, TO BS.1706.
101	A 21177/645	34 EA	WASHER METRIC, CRINKLE, M2, 4.6mm O/D, 2.2mm I/D, : St 1 Iss M/S D/I 0.16mm THK, 0.38mm MIN SET, BERYLLIUM COPPER, NICKL+ZINC PL &PASS, TO BS.1706, BS.4463.
103	A 21177/648	24 EA	WASHER METRIC, CRINKLE, M3, 6.4mm O/D, 3.2mm I/D, : St 1 Iss M/S D/I 0.16mm THK, 0.46mm MIN SET, BERYLLIUM COPPER, NICKL+ZINC PL &PASS, TO BS.1706, BS.4463.
104	A 21177/650	9 EA	WASHER METRIC, CRINKLE, M4, 8.1mm O/D, 4.3mm I/D, : St 1 Iss M/S D/I 0.28mm THK, 0.69mm MIN SET, BERYLLIUM COPPER, NICKL+ZINC PL &PASS, TO BS.1706, BS.4463.
105	A 21262/702	1 EA	SCREW SELF-TAP-TYPE.B PAN-HEAD POZIDRIVE, No.2, : St 3 Iss M/S D/I 0.187 in LONG, STEEL HARDENED, ZINC-PL & PASS TO BS.3382-PT.2, T.P.I.-32, BS.4174.
108	A 21815/354	6 EA	SCREW METRIC SET CUP-POINT HEXAGON-SOCKET, M3, 3 : St 1 Iss M/S D/I mm LONG, STEEL ZINC-PL & PASS TO BS.3382-PT.2, ISO-METRIC-COARSE THREAD B BS.3643 & 4168.
109	A 21817/021	6 EA	SCREW METRIC CAP-HEAD HEXAGON-SOCKET, M2, 5 mm : St 3 Iss M/S D/I LONG, STEEL ZINC-PL & PASS TO BS.3382-PT.2, ISO-METRIC-COARSE THREAD BS.4168.
110	A 21833/001	129 EA	SCREW METRIC-SEMS PAN-HEAD POZIDRIVE, M3, 8 mm : St 1 Iss M/S D/I LONG, STEEL BRIGHT NICKEL PLATE BS.3382, SPRING WASHER, ISO-COARSE-THRD, RECESS No1, BS.3643&4183.

Cir. Ref.	MI part number	Qty	Description
Overall assembly A0 (contd.)			
111	A 21833/005	6 EA	SCREW METRIC-SEMS PAN-HEAD POZIDRIVE, M3, 12 mm : St 1 Iss M/S D/I LONG, STEEL BRIGHT NICKEL PLATE BS.3382, SPRING WASHER, ISO-COARSE-THRD, RECESS No1, BS.3643&4183.
112	A 21833/008	14 EA	SCREW METRIC-SEMS PAN-HEAD POZIDRIVE, M4, 8 mm : St 1 Iss M/S D/I LONG, STEEL BRIGHT NICKEL PLATE BS.3382, SPRING WASHER, ISO-COARSE-THRD, RECESS No2, BS.3643&4183.
113	A 21833/009	12 EA	SCREW METRIC-SEMS PAN-HEAD POZIDRIVE, M4, 12 mm : St 1 Iss M/S D/I LONG, STEEL BRIGHT NICKEL PLATE BS.3382, SPRING WASHER, ISO-COARSE-THRD, RECESS No2, BS.3643&4183.
115	E 21833/003	6 EA	SCREW METRIC-SEMS PAN-HEAD POZIDRIVE, M4, 10 mm : St 1 Iss M/S D/I LONG, STEEL BRIGHT NICKEL PLATE BS.3382, SPRING WASHER, ISO-COARSE-THRD, RECESS No2, BS.3643&4183.
116	21833/002	2 EA	SCREW METRIC-SEMS PAN-HEAD POZIDRIVE, M3, 20 mm : St 1 Iss M/S D/I LONG, STEEL BRIGHT NICKEL PLATE BS.3382, SPRING WASHER, ISO-COARSE-THRD, RECESS No1, BS.3643&4183.
117	A 21836/101	5 EA	SCREW METRIC PAN-HEAD POZIDRIVE, M4, 8 mm LONG, : St 2 Iss M/S D/I STEEL BRIGHT NICKEL PLATE TO BS.3382-PT.3, ISO-COARSE-THREAD, RECESS No2, BS.3643 & 4183.
121	A 21836/113	28 EA	SCREW METRIC PAN-HEAD POZIDRIVE, M2, 6 mm LONG, : St 1 Iss M/S D/I STEEL BRIGHT NICKEL PLATE TO BS.3382-PT.3, ISO-COARSE-THREAD, RECESS No0, BS.3643 & 4183.
122	A 21837/471	2 EA	SCREW METRIC PAN-HEAD SLOTTED, M4, 30 mm LONG, : St 7 Iss M/S D/I STEEL ZINC-PL & PASS TO BS.3382-PT.2, ISO-METRIC-COARSE THREAD BS.3643 & 4183.
123	A 21836/132	4 EA	SCREW METRIC PAN-HEAD POZIDRIVE, M4, 6 mm LONG, : St 2 Iss M/S D/I STEEL BRIGHT NICKEL PLATE TO BS.3382-PT.3, ISO-COARSE-THREAD, RECESS No2, BS.3643 & 4183.
125	E 21837/473	2 EA	SCREW METRIC PAN-HEAD SLOTTED, M4, 35 mm LONG, : St 3 Iss M/S D/I STEEL ZINC-PL & PASS TO BS.3382-PT.2, ISO-METRIC-COARSE THREAD BS.3643 & 4183.
128	A 21857/452	8 EA	SCREW METRIC CSK-HEAD POZIDRIVE, M3, 10 mm LONG, : St 1 Iss M/S D/I STEEL BRIGHT NICKEL PLATE TO BS.3382-PT.3, ISO-COARSE-THREAD, RECESS No1, BS.3643 & 4183.
130	A 21857/463	2 EA	SCREW METRIC CSK-HEAD POZIDRIVE, M4, 10 mm LONG, : St 1 Iss M/S D/I STEEL BRIGHT NICKEL PLATE TO BS.3382-PT.3, ISO-COARSE-THREAD, RECESS No2, BS.3643 & 4183.
135	A 21882/105	18 EA	NUT METRIC, FULL, HEXAGONAL, M2, 4mm A/F, 1.6mm : St 1 Iss M/S D/I THK, STEEL, ZINC PL & PASS, TO BS.3382-PT.2, ISO-METRIC-COARSE THREAD BS.3643 & 3692.
137	A 21882/108	12 EA	NUT METRIC, FULL, HEXAGONAL, M3, 5.5mm A/F, 2.4mm : St 1 Iss M/S D/I THK, STEEL, ZINC PL & PASS, TO BS.3382-PT.2, ISO-METRIC-COARSE THREAD BS.3643 & 3692.
139	21882/110	2 EA	NUT METRIC, FULL, HEXAGONAL, M4, 7mm A/F, 3.2mm : St 1 Iss M/S D/I THK, STEEL, ZINC PL & PASS, TO BS.3382-PT.2, ISO-METRIC-COARSE THREAD BS.3643 & 3692.
140	A 23133/451	5 EA	SLEEVE SYNTHETIC-RUBBER, BLACK, 1.5 mm I/D, 15 mm : St 1 Iss M/S D/I

Cir. Ref.	MI part number	Qty	Description
Overall assembly A0 (contd.)			
			LONG, BS.3858 & BS.2782.
144	23231/012	2 EA	TERMINAL SOLDER-TAG, SINGLE-ENDED, M2.5/M3, 3.2mm : St 1 Iss M/S D/I I/DIA, 14mm LONG, 3mm WIDE, BRASS, 0.5mm THICK, HOT-TIN DIPPED OR TIN/LEAD OVER NICKEL PLTE.
145 A	23231/042	2 EA	TERMINAL SOLDER-TAG, DOUBLE-ENDED, M2.5/M3, SHORT,: St 1 Iss M/S D/I 3.2mm I/DIA, 18mm LONG, 3mm WIDE, BRASS, 0.3mm THICK, HOT-TIN DIPPED OR TIN/LEAD OVER NICKEL PL.
200 D	43129/828	2 EA	B1 TO B2 RIBBON CABLE ASSY RIBBON-LEAD 26 WAY, SOCKET 26 WAY, - SOCKET 26 : St 3 Iss 004 M/S D/I WAY, FLAT MULTICOLOUR CABLE, 70mm LONG.
201 D	43138/423	1 EA	KEYBOARD TO B2 RIBBON CABLE ASSY RIBBON-LEAD 26 WAY, SOCKET 26 WAY, - SOCKET 26 : St 3 Iss 001 M/S D/I WAY, FLAT MULTICOLOUR CABLE, 130mm LONG.
202 D	43138/430	1 EA	POWER SUPPLY TO B2 CABLE ASSY WIRE-LEAD-CRIMPED 6 WIRE, 16/0.2mm, 1.14mm TERM : St 3 Iss 004 M/S D/I HOUSING 7 WAY, KEY 2, - CRIMP ROD HOUSING 7 WAY, KEY 5, 970mm LONG, SLEEVES & HEATSHRINK FITTED.
203 D	43138/433	1 EA	REAR PANEL AND SPEAKER LEAD ASSY WIRE-LEAD-CRIMPED 4 WIRE, 7/0.2mm & COAX, CRIMP : St 3 Iss 002 M/S D/I HOUSING 7 WAY, KEY 5, - FREE END, STRIPPD, TWISTD AIR & 2-COAX, 695mm LONG, MARKER SLEEVES FITTED.
204 D	43138/500	1 EA	ATTEN. DRIVE RIBBON CABLE ASSY RIBBON-LEAD 20 WAY, SOCKET 20 WAY, KEY POS 19, - : St 3 Iss 005 M/S D/I SOCKET 10 WAY, 2-OFF, BRANCHED, FLAT MULTICOLOUR CABLE, 565mm LONG.
205 D	43138/435	1 EA	POWER LOAD TO RF TRAY CABLE ASSY RF-CABLE-CONFORMABLE 1671A, 50 OHMS, SMA MALE : St 3 Iss 003 M/S D/I SOLDERED - SMA MALE SOLDERED, 200mm LONG, GREEN SLEEVES FITTED.
206 D	43138/450	1 EA	RS232 CABLE ASSY RIBBON-LEAD 10 WAY, SOCKET 10 WAY, KEY POS 10, - : St 3 Iss 001 D/S D/I D-TYPE PLUG 9 WAY, FLAT MULTICOLOUR CABLE, 370mm LONG.
207 D	43138/474	1 EA	EXT. STANDARD LEAD ASSY RF-CABLE-FLEXIBLE RG178B/U, 50 OHMS, CRIMP SKT : St 3 Iss 001 M/S D/I HOUSING 3 WAY, - UNTERMINATED 20mm PIGTAIL, 980mm LONG, MARKER SLEEVES FITTED.
208 A	37590/353	4 EA	MOULDED-PART POLYACETAL, SPACER PLUG, RED, 6mm : St 3 Iss 001 M/S D/I O/DIA TAPERED TO 4.38mm, 3.3mm DIA SPIGOT, 1.8mm I/DIA, 7mm LONG.
210 A	23243/197	2 EA	CLIP CABLE RIBBON, SELF-ADHESIVE, 33.02 mm CABLE : St 1 Iss M/S D/I WIDTH, ALUMINIUM, POLYETHYLENE PAD, 33.2mm LONG, 9.4mm WIDE.
347 A	23437/802	1 EA	HOUSING FOR FAN ASSY CONNECTOR-PART HOUSING, 3 WAY, FOR 1.14mm CRIMP : St 3 Iss M/S D/I TERMINALS, SINGLE ROW, 5.08mm PITCH, NYLON, NATURAL
351 E	35907/675	1 EA	FABRICATED-PART STAINLESS STEEL, FAN COVER & : St 3 Iss 002 M/S D/I FILTER, CLEAN FINISH, 1 mm THK MATL, 83mm LONG, 83mm WDE, 28mm HI, 0.28mm WIRE MESH SPOT WELDED.
354 D	23416/192	1 EA	DC FUSE HOLDER FUSEHOLDER PANEL MOUNTING, 20mm x 5mm, 10A MAX, : St 1 Iss M/S D/I 250V MAX, 50.5 mm LONG, 16 mm DIA, UL & CSA APPROVED.
355 A	23187/132	1 EA	GROMMET OPEN, 0.25 in DIA PANEL HOLE, 0.187 in : St 1 Iss M/S D/I I/DIA, 0.375 in O/DIA, 0.062 in PANEL THICKNESS, PVC, BLACK.
357 A	35907/587	1 EA	FABRICATED-PART ALUMINIUM, SWITCH BRACKET, : St 3 Iss 001 M/S D/I ALOCROM-1000 FINISH, 1.6 mm THK MATL, 45mm LONG, 25.53mm WIDE, 25mm HIGH, M3 FIXED NUTS FITTED.

Cir. Ref.	MI part number	Qty	Description
Overall assembly A0 (contd.)			
[illegible]	A 37591/684	1 EA	MOULDED-PART POLYACETAL, PUSH ROD MAINS SWITCH, : St 3 Iss 001 M/S D/I NATURAL COLOUR, 6.1mm O/DIA, 9mm DIA FLANGE, 3.4mm SQ INSET, 35mm LONG, SLOTTED.
[illegible]	A 37491/500	1 EA	FABRICATED-PART POLYCARBONATE, SWITCH SAFETY : St 3 Iss 001 M/S D/I COVER, CLEAN FINISH, 1 mm THK MATL, 52mm LONG, 29mm WIDE, 32mm HIGH.
364	A 37591/[illegible]	1 EA	MOULDED-PART PVC, MAINS INPUT COVER, BLACK, : St 3 Iss 001 M/S D/I FLEXIBLE, 50mm LONG, 38mm WIDE, 35.5mm HIGH, 2mm THK WALL.
[illegible]	A 43133/533	0.1 EA	SET-OF-LEADS IN MULTIPLES OF 10, 2945 REAR PANEL &: St 3 Iss 009 M/S D/I POTS ASSY, COMPRISING 8 -7/0.2mm, 3 -16/0.2mm, 1 -24/0.2mm, 2-TINNED CU WIRE & 4-SLEEVING.
366	H 43138/739	1 EA	'AC/DC SUPPLY CABLE,INC.SWITCH WIRE-LEAD-CRIMPED 6 WIRE, 16/0.2mm & SCREENED, : St 3 Iss 002 M/S D/I 1.14mm TERM HOUSING 7 WAY, & 3 WAY - PUSH BUTTN SWITCH, 760mm LONG, SLEEVING & CABLE TIES FITTED.
368	H 23423/185	1 EA	DC INPUT CONNECTOR CONNECTOR CIRCULAR, PLUG, 3 WAY, AUDIO, STRAIGHT, : St 3 Iss M/S D/I PANEL MOUNTING, SOLDER BUCKET TERMS, NICKEL PLATED BODY.
[illegible]	D 43138/473	1 EA	EARTH LEAD AND DC +VE LEAD ASSY WIRE-LEAD-CRIMPED 2 WIRE, 16 & 32/0.2mm, : St 3 Iss 003 M/S D/I RECEPTACLE 6.3mm TAB, 2-OFF, - FREE END, STRIPPED 12mm, 220mm LONG, SLEEVE FITTED.
374	E 15410/301	0.1 M	WIRE COPPER TINNED 32 / 0.2 mm, RED PVC : St 2 Iss M/S D/I INSULATION, DEF-STAN 61-12 PT.6 TYPE-3, 500M REELS.
375	E 15410/305	0.05 M	WIRE COPPER TINNED 32 / 0.2 mm, BLACK PVC : St 2 Iss M/S D/I INSULATION, DEF-STAN 61-12 PT.6 TYPE-3, 500M REELS.
403	D 11880/207	1 M	RFI GASKET, FRONT PANEL TO CASE GASKET-RF CORED-KNITTED-WIRE, TWO LAYERS : St 1 Iss M/S D/I TIN-COPPER-STEEL, 3/40/57% WIRE, OVER NEOPRENE OR SILICONE RUBBER CORE, 2.4mm SQ, ON 100 MTRE REELS.
405	A 35907/302	1 EA	FABRICATED-PART STEEL, BRACKET INVERTER, ZINC PL &: St 3 Iss 002 M/S D/I PASS, YELLOW, TO BS.1706 CLASS-B, 1.2 mm THK MATL, 64.5mm LONG, 61.4mm WIDE.
406	A 35907/303	1 EA	FABRICATED-PART STEEL, COVER INVERTER, ZINC PL & : St 3 Iss 003 M/S D/I PASS, YELLOW, TO BS.1706 CLASS-B, 0.9 mm THK MATL, 48.8mm LG, 44.2mm WD, 28.4mm HI, CORNERS WELDED.
407	A 31519/175	1 EA	FABRICATED-PART BRASS EXPANDED MESH, GASKET : St 3 Iss 003 M/S D/I INVERTER, CLEAN FINISH, TO BSI-CP.3012, 0.08 mm THK MATL, 53mm LONG, 48mm WIDE.
409	A 31737/122	2 EA	LABEL-MARKED VINYL FILM, MARKING "WARNING HIGH : St 1 Iss 004 M/S D/I VOLTAGES EXPOSED .....", BLACK ON YELLOW, SELF ADHESIVE, 60mm LONG, 25mm WIDE.
410	D 37591/397	1 EA	LARGE KNOB MOULDED-PART ABS, KNOB, LIGHT-GREY, 40mm O/DIA : St 3 Iss 001 M/S D/I FLUTED, 12mm HIGH, CURVED TOP.
411	A 35907/366	1 EA	FABRICATED-PART ALUMINIUM, BRACKET MEMORY CARD : St 3 Iss 001 M/S D/I CHASSIS, ALOCROM-1000 FINISH, 1.6 mm THK MATL, 50.15mm LONG, 23.7mm WIDE, 7.9mm HIGH.
412	D 37591/452	1 EA	COLLET FOR LARGE KNOB MOULDED-PART POLYACETAL, COLLET, NATURAL COLOUR, : St 3 Iss 001 M/S D/I 11.8mm LONG, 10.15mm WIDE, 9.4mm HIGH.

Cir. Ref.	MI part number	Qty	Description
Overall assembly A0 (contd.)			
413	A 33901/711	8 EA	MACHINED-PART ROUND, SPACER, NYLON, CLEAN FINISH, : St 3 Iss 001 M/S D/I 6mm O/DIA, 2.9mm I/DIA, 6mm LONG.
414	D 37591/610	3 EA	SMALL KNOB KNOB RIBBED, METRAK-3, 11 mm O/D, 14.5 mm HIGH, : St 2 Iss 002 M/S D/I LIGHT-GREY, 3.2 mm SPINDLE DIA, M3 TAP, MATL-ABS, TO BS.4800-10A03, WITH TOP INDENT MOULDED IN.
415	A 21888/855	4 EA	SPACER HEXAGONAL, TAPPED THROUGH, M3, 5.5 mm A/F, : St 1 Iss M/S D/I 18 mm LONG, BRASS, ELECTRO-NICKEL PLTE.
418	A 35907/276	1 EA	FABRICATED-PART ALUMINIUM, POT MOUNTING PLATE, : St 3 Iss 003 M/S D/I ALOCROM-1000 FINISH, 1.6 mm THK MATL, 68.5mm LONG, 23mm WIDE.
421	A 23435/562	1 EA	CONNECTOR-PART SCREW-LOCK KIT, D-TYPE, JACK SOCKET: St 1 Iss M/S D/I LONG, 4-40UNC, COMPRISING 2-0FF EACH OF STAND-OFF, FLAT WASHER, LOCK WASHER & HEX NUT.
423	A 23231/001	5 EA	TERMINAL SOLDER-TAG, SINGLE-ENDED, BNC TYPE, : St 1 Iss M/S D/I 0.375in I/D, 0.75in LONG, 0.25in WIDE, BRASS, HOT-TIN DIPPED OR TIN/LEAD OVER NICKEL PLTE.
426	D 43138/389	1 EA	!ACCESSORY CONNECTOR & LEAD ASSY WIRE-LEAD-CRIMPED 7 WIRE, 7/0.2mm & COAX, CRIMP : St 3 Iss 004 M/S D/I HOUSING 10 WAY, DBLE ROW, KEY POS 2, - CIRCULAR SOCKET, 7 WAY, SOLDERD, 170mm LONG, SLEEVES FITTD.
428	A 33901/156	2 EA	MACHINED-PART ROUND, PANEL NUT, BRASS, NICKEL PL, : St 3 Iss 003 M/S D/I BRIGHT, TO BS.3382-PT.3, 15.5mm O/DIA, 3.3mm THICK, 1/2"-28UNEF TAPPED THROUGH. SLOTTED.
430	D 43138/425	1 EA	SHAFT ENCODER WIRE-LEAD-CRIMPED 4 WIRE, 7/0.2mm, CRIMP HOUSING 5: St 3 Iss 002 M/S D/I WAY, KEY POS 2, - CRIMP HOUSING 5 WAY, 245mm LONG, SLEEVES FITTED.
431	D 43138/429	1 EA	VOL/SQUELCH/SHIFT LEAD ASSY WIRE-LEAD-CRIMPED 5 WIRE, 7/0.2mm, CRIMP HOUSING 6: St 3 Iss 001 M/S D/I WAY, KEY POS 5, - FREE END, STRIPPED 12mm , 355mm LONG, SLEEVES FITTED.
432	D 43138/656	1 EA	AF OUT LEAD ASSY RF-CABLE-FLEXIBLE RG178B/U, 50 OHMS, CRIMP SKT : St 3 Iss 003 M/S D/I HOUSING 3 WAY, - UNTERMINATED 25mm PIGTAILS, 650mm LONG, BRAID & HEAT-SHRINK SLEEVING FITTED.
433	D 43138/655	1 EA	AF IN LEAD ASSY RF-CABLE-FLEXIBLE RG178B/U, 50 OHMS, SMB FEMALE : St 3 Iss 002 M/S D/I ELBOW CRIMPED - UNTERMINATED 25mm PIGTAILS, 630mm LONG, BRAID & HEAT-SHRINK SLEEVING FITTED.
434	D 43138/437	2 EA	ANT. IN/DX OUT TO RF TRAY RF-CABLE-CONFORMABLE 1671A, 50 OHMS, SMA MALE : St 3 Iss 006 M/S D/I ELBOW SOLDERED - BNC FEMALE BULKHEAD SOLDERED, 250mm LONG, GREEN SLEEVES FITTED.
440	A 33901/717	1 EA	MACHINED-PART ROUND, NUT SPECIAL, BRASS, CLEAN : St 3 Iss 001 M/S D/I FINISH, TO BSI-CP.3012, 4.75mm O/DIA, 8mm LONG, M3 TAPPED THROUGH, SLOTTED END.
441	A 37591/556	1 EA	MOULDED-PART POLYURETHANE, COLLAR N-TYPE, : St 3 Iss 001 M/S D/I LIGHT-GREY, 22mm DIA FLANGES, 15mm O/DIA, 13.5mm I/DIA, 5mm THICK.
442	A 33900/714	2 EA	MACHINED-PART ROUND, SPACER, ALUMINIUM, : St 3 Iss 003 M/S D/I ALOCROM-1000 FINISH, 17mm O/DIA, 12.7mm I/DIA, 2mm LONG.

Cir. Ref.	MI part number	Qty	Description
Overall assembly A0 (contd.)			
445	A 21178/202	4 EA	SPACER ROUND, UNTAPPED, 3.2 mm I/D, 6 mm O/D, 3 mm: St 1 Iss M/S D/I LONG, BRASS, ELECTRO-NICKEL PLTE.
447	A 21837/371	4 EA	SCREW METRIC PAN-HEAD SLOTTED, M3, 30 mm LONG, : St 3 Iss M/S D/I STEEL ZINC-PL & PASS TO BS.3382-PT.2, ISO-METRIC-COARSE THREAD BS.3643 & 4183.
481	F 31739/265	1 EA	LABEL-MARKED POLYCARBONATE, MARKING "MARCONI : St 3 Iss 003 M/S D/I INSTRUMENTS", LIGHT GREY ON BLACK, SELF ADHESIVE, 152mm LNG, 21mm WIDE.
482	F 35907/589	1 EA	FABRICATED-PART ALUMINIUM, COVER, ALOCROM-1000 : St 3 Iss 001 M/S D/I FINISH, 1.2 mm THK MATL, 357mm LONG, 140mm WIDE, 8mm HIGH.
483	F 35907/590	1 EA	FABRICATED-PART ALUMINIUM, BRACKET, ALOCROM-1000 : St 3 Iss 001 M/S D/I FINISH, 1.2 mm THK MATL, 45mm LONG, 30mm WIDE, 24.5mm HIGH, M4 FIXED NUTS FITTED.
484	F 35907/591	1 EA	FABRICATED-PART ALUMINIUM, BRACKET, ALOCROM-1000 : St 3 Iss 001 M/S D/I FINISH, 1.5 mm THK MATL, 134mm LONG, 30mm WIDE, 17mm HIGH, M4 FIXED NUTS FITTED.
485	F 37591/681	1 EA	MOULDED-PART ABS, FRONT COVER, THERMOFORMED, : St 3 Iss 003 M/S D/I BLACK, HAIRCELL, 3mm THK, 368.8mm LONG, 158mm WIDE, 75mm HIGH.
486	F 21182/024	1 EA	FASTENER STUD-RETAINER, SPLIT-WASHER, NYLON, : St 1 Iss M/S D/I BLACK.
487	F 21182/029	1 EA	FASTENER RECEPTACLE, CLIP-IN, FOR 0.88-1.25mm THK : St 1 Iss M/S D/I PANEL, NYLON, BLACK.
488	F 21182/030	1 EA	FASTENER STUD, WING-HEAD, 1/4 TURN LOCK, FOR : St 1 Iss M/S D/I 2.17-3.43mm THK PANEL, CLIP-IN RECEPTACLE VERSION, NYLON, BLACK.
489	F 21833/008	4 EA	SCREW METRIC-SEMS PAN-HEAD POZIDRIVE, M4, 8 mm : St 1 Iss M/S D/I LONG, STEEL BRIGHT NICKEL PLATE BS.3382, SPRING WASHER, ISO-COARSE-THRD, RECESS No2, BS.3643&4183.
490	F 22315/796	4 EA	FOOT SELF-ADHESIVE, BUTTON, POLYURETHANE, GREY, : St 1 Iss M/S D/I 12.7mm SQUARE, 5.56mm HIGH.
491	F 22315/798	2 EA	FOOT SELF-ADHESIVE, BUTTON, POLYURETHANE, GREY, : St 1 Iss M/S D/I 12.7mm DIA, 3.57mm HIGH.
492	F 22315/114	2 EA	FASTENER LATCH, TOGGLE WITH CURVED SPRING LINK, 80: St 4 Iss M/S D/I x 23mm, 14.3mm HIGH, WITH KEEPER 11mm O/DIA, 6.4mm HIGH, STAINLESS STEEL, PASSIVATED.
500	H 41700/785	1 EA	FABRICATED-PART STEEL, RF TRAY, TIN PL, BRIGHT, TO: St 3 Iss 001 M/S D/I BS.1872, 0.8 mm THK MATL, 314mmLG, 281mmWD, 44.4mm HI, SOLDERED JOINTS, SPOTWELD, VARIOUS FITMENTS.
502	E 41690/611	1 EA	FABRICATED-PART ALUMINIUM, LID RF COMMON ASSY, : St 3 Iss 001 M/S D/I MARKED, ALOCROM-1000 FINISH, 0.8 mm THK MATL, 315.12mm LONG, 271mm WIDE, 5mm HIGH, SPOTWELDED.
503	H 41690/614	1 EA	FABRICATED-PART ALUMINIUM, RF TRAY LID, : St 3 Iss 001 M/S D/I ALOCROM-1000 FINISH, 0.8 mm THK MATL, 211.3mm LONG, 123.65mm WIDE, 5mm HIGH, SPOTWELDED.
504	A 22315/798	1 EA	FOOT SELF-ADHESIVE, BUTTON, POLYURETHANE, GREY, : St 1 Iss M/S D/I 12.7mm DIA, 3.57mm HIGH.

Cir. Ref.	MI part number	Qty	Description
Overall assembly A0 (contd.)			
505	D 35907/167	19 EA	CO-AXIAL LEAD RETAINING CLIP ETCHED-PAR• BERYLLIUM-COPPER, CLIP COAX RETAINING,: St 3 Iss 003 M/S D/I CLEAN FINISH, TO BSI-CP.3012, 0.56 mm THK MATL, 11mm LONG, 5.3mm WIDE, 2.05mm HIGH.
506	22315/799	2 EA	FOOT SELF-ADHESIVE, BUTTON, POLYURETHANE, GREY, : St 1 Iss M/S D/I 20.64mm SQUARE, 7.54mm HIGH.
513	A 21888/900	47 EA	PILLAR HEXAGONAL, THREAD MALE/FEMALE, M3, 5 mm : St 7 Iss M/S D/I A/F, 16 mm BODY LENGTH, 6 mm TAP DEPTH, 6 mm THREAD LENGTH, BRASS, PROTECTIVE DIP.
514	D 31119/120	9 EA	EARTH SPRINGS FOR A6,A11,C3,C4 FABRICATED-PART BERYLLIUM-COPPER, EARTH SPRING, : St 3 Iss 004 M/S D/I TIN PL, BRIGHT, TO BS.1872, 0.13 mm THK MATL, 14mm WIDE, 9mm FORMED HEIGHT.
515	A 44829/922	1 EA	PCB-ASSEMBLY MIXED TECHNOLOGY, 2945, A2, INPUT : St 3 Iss 009 M/S D/I MIXER.
520	A 44829/923	1 EA	PCB-ASSEMBLY MIXED TECHNOLOGY, 2945, A3, SECOND & : St 3 Iss 012 M/S D/I THIRD MIXER.
525	A 44830/103	1 EA	PCB-ASSEMBLY MIXED TECHNOLOGY, 2945, A4/1, 10.7MHz: St 3 Iss 001 M/S D/I IF.
530	A 44829/925	1 EA	PCB-ASSEMBLY MIXED TECHNOLOGY, 2945, A6/1, OUTPUT : St 3 Iss 003 M/S D/I AMPLIFIER.
535	E 44830/111	1 EA	PCB-ASSEMBLY SURFACE MOUNT, 2945, A7/1, FIRST : St 3 Iss 001 M/S D/I LOCAL OSCILLATOR CONTROL.
540	E 44830/112	1 EA	PCB-ASSEMBLY MIXED TECHNOLOGY, 2945A, A8/1, FIRST : St 3 Iss 003 M/S D/I LOCAL OSCILLATOR.
545	A 44830/097	1 EA	PCB-ASSEMBLY MIXED TECHNOLOGY, 2945, A9/1, SECOND : St 3 Iss 005 M/S D/I & THIRD LOCAL OSCILLATOR.
550	A 44829/930	1 EA	PCB-ASSEMBLY MIXED TECHNOLOGY, 2945, A10, 90MHz : St 3 Iss 008 M/S D/I SWEPT LOCAL OSCILLATOR.
552	E 44830/163	1 EA	PCB-ASSEMBLY MIXED TECHNOLOGY, 2945A, A11/1, INPUT: St 3 Iss 001 M/S D/I SWITCH DUPLEX.
569	A 18810/808	89 EA	SOLDER RING-FLUX-CORED, 22SWG, 3.6mm I/DIA, : St 1 Iss M/S D/I LOW-MELT-POINT, 62/36/2-Sn/Pb/Ag, ROSIN FLUX RA362 BS.441-TYPE.1, LIQUIDUS @ 179DEG.C, IN TRAYS.
571	E 43138/755	1 EA	DC SUPPLY CABLE WIRE-LEAD-SOLDERED 2 WIRE, 63/0.2mm, CIRCULAR : St 3 Iss 001 M/S D/I PLUG, RT-ANGLED, 3 WAY, - FREE END, STRIPPED 12mm, 2m LONG, TWISTED PAIR, SLEEVE FITTED, LABELLED.
572	D 43138/503	1 EA	A4 TO RF TRAY LEAD ASSY WIRE-LEAD-CRIMPED 2 WIRE, 7/0.2mm, CRIMP HOUSING 4: t 3 Iss 001 M/S D/I WAY, KEY POS 2, - FREE END, STRIPPED 12mm, 75mm LONG, NO SLEEVES.
575	J 43138/130	1 EA	A6 TO RF TRAY LEAD ASSY WIRE-LEAD-CRIMPED 4 WIRE, 7/0.2mm, CRIMP HOUSING 5: t 3 Iss 001 M/S D/I WAY, KEY POS 2, - FREE END, STRIPPED 12mm, 120mm LONG, SLEEVE FITTED.
576	D 43138/404	1 EA	A8 TO RF TRAY LEAD ASSY WIRE-LEAD-CRIMPED 5 WIRE, 7/0.2mm, CRIMP HOUSING 6: t 3 Iss 001 M/S D/I WAY, KEY POS 2, - FREE END, STRIPPED 12mm, 150mm LONG, SLEEVES FITTED.

Cir. Ref.		MI part number	Qty	Description
Overall assembly A0 (contd.)				
577	D	43138/405	1 EA	A9 TO RF TRAY LEAD ASSY WIRE-LEAD-CRIMPED 6 WIRE, 7/0.2mm, CRIMP HOUSING 7:St 3 Iss 002 M/S D/I WAY, KEY POS 2, - FREE END, STRIPPED 12mm, 157mm LONG, SLEEVES FITTED.
578	D	43138/406	1 EA	A2 TO RF TRAY LEAD ASSY WIRE-LEAD-CRIMPED 3 WIRE, 7/0.2mm, CRIMP HOUSING 4: t 3 Iss 001 M/S D/I WAY, KEY POS 2, - FREE END, STRIPPED 12mm, 142mm LONG, SLEEVES FITTED.
579	D	43138/407	1 EA	A4 TO RF TRAY LEAD ASSY WIRE-LEAD-CRIMPED 7 WIRE, 7/0.2mm, CRIMP HOUSING 8:St 3 Iss 001 M/S D/I WAY, KEY POS 2, - FREE END, STRIPPED 12mm, 165mm LONG, SLEEVES FITTED.
580		43138/124	1 EA	WIRE-LEAD-CRIMPED 1 WIRE, 7/0.2mm, RECEPTACLE : St 3 Iss 001 M/S D/I CRIMPED, WITHOUT HOUSING, - FREE END, STRIPPED 12mm, 76mm LONG, NO SLEEVES.
581	D	43138/409	1 EA	A10 TO RF TRAY LEAD ASSY WIRE-LEAD-CRIMPED 3 WIRE, 7/0.2mm, CRIMP HOUSING 6: St 3 Iss 004 M/S D/I WAY, KEY POS 2, - CRIMP HOUSING 2 WAY, & 2-FREE ENDS STRIPPED 12mm, 115mm LONG, SLEEVES FITTED.
582	D	43130/186	1 EA	A11 TO RF TRAY LEAD ASSY RIBBON-LEAD 14 WAY, SOCKET 14 WAY, - UNTERMINATED,: St 3 Iss 005 M/S D/I FLAT MULTICOLOUR CABLE, 100mm LONG.
583	A	43138/416	2 EA	WIRE-LEAD-CRIMPED 1 WIRE, 7/0.2mm, CRIMP HOUSING 2: St 3 Iss 003 M/S D/I WAY. - CRIMP HOUSING 2 WAY, 60mm LONG, NO SLEEVES.
584	D	43137/511	2 EA	A7, C1 TO RF TRAY RIBBON-LEAD 16 WAY, SOCKET 16 WAY, - UNTERMINATED,: St 3 Iss 003 M/S D/I FLAT MULTICOLOUR CABLE, 115mm LONG.
586	A	43138/657	1 EA	WIRE-LEAD-CRIMPED 1 WIRE, 7/0.2mm, CRIMP HOUSING 2: St 3 Iss 001 M/S D/I WAY, - CRIMP HOUSING 2 WAY, 48mm LONG, NO SLEEVES.
587	D	43138/421	2 EA	SMA-SMA RF LEAD ASSY RF-CABLE-CONFORMABLE 1671A, 50 OHMS, SMA MALE : St 3 Iss 003 M/S D/I SOLDERED - SMA MALE SOLDERED, 105mm LONG, BLUE SLEEVES FITTED.
588	D	43138/456	1 EA	C TRAY TO A6/K1 RF-CABLE-CONFORMABLE 1671A, 50 OHMS, SMA MALE : St 3 Iss 006 M/S D/I ELBOW SOLDERED - SMA MALE ELBOW SOLDERED, 220mm LONG, YELLOW SLEEVE FITTED.
589	D	43138/436	1 EA	A11-ATTEN RF LEAD ASSY RF-CABLE-CONFORMABLE 1671A, 50 OHMS, SMA MALE : St 3 Iss 003 M/S D/I SOLDERED - UNTERMINATED, OUTER STRIPPED 8mm, 145mm LONG, RED SLEEVE FITTED.
595	D	43138/749	1 EA	A9/1 TO C TRAY RF-CABLE-CONFORMABLE 1671A, 50 OHMS, SMA MALE : St 3 Iss 001 M/S D/I SOLDERED - UNTERMINATED, OUTER STRIPPED 5mm, 500mm LONG, RED SLEEVE FITTED.
605	D	43138/751	1 EA	RF TRAY CABLEFORM SET-OF-LEADS CABLE-FORMED, 2947, INST, COMPRISING : St 3 Iss 001 M/S D/I 5 -7/0.2mm, 1 -16/0.2mm, 15 -COAX LEADS, CRIMP HOUSINGS FITTED, LACED TOGETHER, PACKED IN BAG.
611	A	23435/167	1 EA	CONNECTOR-PART HOUSING, 2 WAY, FOR 0.64mm CRIMP : St 1 Iss M/S D/I CONTACTS, SINGLE ROW, 2.54mm PITCH, MATL-PPO, BLACK.
612	A	13610/684	0.06 M	BAR-METRIC COPPER STRIP, 2 x 0.125 mm, : St 2 Iss M/S D/I BS.2870-C101, HALF HARD, IN-COIL.
615	A	23243/706	22 EA	CLIP CABLE TIE SELF-CLINCHING, 203mm LG, 2.5mm : St 2 Iss M/S D/I WDE, 1.6 - 51 mm GRIP DIA, NYLON, NATURAL, NON-RELEASABLE.

Cir. Ref.	MI part number	Qty	Description
Overall assembly A0 (contd.)			
616	A 23243/191	2 EA	CLIP CABLE SELF-ADHESIVE, 6 mm GRIP DIA, : St 1 Iss M/S D/I ALUMINIUM, POLYETHYLENE PAD, 16mm LONG, 11mm WIDE.
617	A 23243/652	1 EA	CLIP P-TYPE 4.8 mm GRIP DIA, NYLON, BLACK, 3.6mm : St 2 Iss M/S D/I CLAMP-HOLE.
618	A 23243/654	1 EA	CLIP P-TYPE 6.4 mm GRIP DIA, NYLON, BLACK, 3.6mm : St 2 Iss M/S D/I CLAMP-HOLE.
619	A 23243/192	3 EA	CLIP CABLE RIBBON, SELF-ADHESIVE, 12.7 mm CABLE : St 1 Iss M/S D/I WIDTH, ALUMINIUM, POLYETHYLENE PAD, 13mm LONG, 6.4mm WIDE.
620	D 23243/657	3 EA	SCREENED AC CABLE FIXINGS CLIP P-TYPE 9.5 mm GRIP DIA, NYLON, BLACK, 4.0mm : St Iss M/S D/I CLAMP-HOLE.
621	31739/146	2 EA	LABEL-MARKED VINYL FILM, MARKING "CAUTION : St 1 Iss 003 M/S D/I DISCONNECT CABLE ....", BLACK ON YELLOW, SELF ADHESIVE, 51mm LONG, 12mm WIDE.
622	A 43138/472	1 EA	WIRE-LEAD-CRIMPED 1 WIRE, 7/0.2mm, CRIMP HOUSING 2: St 3 Iss 003 M/S D/I WAY, - FREE END, STRIPPED 12mm, 175mm LONG, NO SLEEVES.
623	31739/979	1 EA	LABEL-MARKED VINYL FILM, MARKING "CAUTION THIS : St 4 Iss 001 M/S D/I UNIT CONTAINS LITHIUM BATTERIES .. .", BLACK ON YELLOW, SELF ADHESIVE, 51mm LONG, 27mm WIDE.
624	A 23243/656	1 EA	CLIP P-TYPE 7.9 mm GRIP DIA, NYLON, BLACK, 4.0mm : St 2 Iss M/S D/I CLAMP-HOLE.
625	H 23642/549	1 EA	INDUCTOR-FIXED 1uH +/- 10% COATED-LACQUER, : St 1 Iss M/S D/I MINIATURE, 820mA 0R3 MAX, 45 Q @ 25 MHz, 210 MHz SRF, AXIAL, (TAPED).
626	A 18720/755	0.0001EA	TAPE NEOPRENE-FOAM, CLOSED-CELL, 12 mm WIDE, 2 mm : St 2 Iss M/S D/I THK, SELF-ADHESIVE, BLACK, ON PVC SUPPORT FILM, FILM ON 10M ROLLS.
627	A 31739/824	1 EA	LABEL-MARKED POLYESTER, MARKING "WARNING RISK OF : St 1 Iss 002 M/S D/I FIRE. ....", DARK GREY & YELLOW ON LT GREY, SELF ADHESIVE, 125mm LONG, 20mm WIDE.
628	A 37491/469	1 EA	FABRICATED-PART POLYCARBONATE, SHIELD PSU, CLEAN : St 3 Iss 001 M/S D/I FINISH, 1 mm THK MATL, 51mm LONG, 35mm WIDE, 20mm HIGH.
630	H 24811/149	0.2 EA	R55 SIC FOR 44829/924 (A4) RESISTOR-FIXED METAL-FILM 100R +/- 1% 250mW 200V : St 1 Iss M/S D/I 50 ppm/DEG.C, SURFACE MOUNTED, SIZE MINI-MELF, (8mm TAPE - 7"REEL).
631	H 24811/150	0.2 EA	R55 SIC FOR 44829/924 (A4) RESISTOR-FIXED METAL-FILM 110R +/- 1% 250mW 200V : St 2 Iss M/S D/I 50 ppm/DEG.C, SURFACE MOUNTED, SIZE MINI-MELF, (8mm TAPE - 7"REEL).
632	H 24811/153	0.2 EA	R55 SIC FOR 44829/924 (A4) RESISTOR-FIXED METAL-FILM 150R +/- 1% 250mW 200V : St 1 Iss M/S D/I 50 ppm/DEG.C, SURFACE MOUNTED, SIZE MINI-MELF, (8mm TAPE - 7"REEL).
633	H 24811/155	0.2 EA	R55 SIC FOR 44829/924 (A4) RESISTOR-FIXED METAL-FILM 182R +/- 1% 250mW 200V : St 2 Iss M/S D/I 50 ppm/DEG.C, SURFACE MOUNTED, SIZE MINI-MELF, (8mm TAPE - 7"REEL).
634	H 24811/156	0.2 EA	R55 SIC FOR 44829/924 (A4) RESISTOR-FIXED METAL-FILM 200R +/- 1% 250mW 200V : St 2 Iss M/S D/I 50 ppm/DEG.C, SURFACE MOUNTED, SIZE MINI-MELF, (8mm TAPE - 7"REEL).

Cir. Ref.	MI part number	Qty	Description
Overall assembly A0 (contd.)			
[illegible]	H [illegible]	0.1 EA	R22 SIC FOR 44829/924 (A4) RESISTOR-FIXED METAL-FILM 56R2 +/- 1% 250mW 200V : St 2 Iss M/S D/I 50 ppm/DEG.C, SURFACE MOUNTED, SIZE MINI-MELF, (8mm TAPE - 7"REEL).
[illegible]	H [illegible]	0.1 EA	C31 SIC FOR 44829/926 (A6) CAPACITOR-FIXED CERAMIC 2.7nF +/-10% 63V 2C2 : St 3 Iss M/S D/I SINGLELAYER, RADIAL, 2.5mm PWP, (TAPED).
640	A 18720/767	0.2 M	TAPE NEOPRENE-FOAM, CLOSED-CELL, 0.25 in WIDE, : St 1 Iss M/S D/I 0.187 in THK, SELF-ADHESIVE, BLACK, ON 10M ROLLS.
[illegible]	H [illegible]	0.1 EA	R85 SIC FOR 44829/929 (A9) RESISTOR-FIXED METAL-FILM 332R +/- 1% 250mW 200V : St 1 Iss M/S D/I 50 ppm/DEG.C, SURFACE MOUNTED, SIZE MINI-MELF, (8mm TAPE - 7"REEL).
[illegible]	H [illegible]	0.2 EA	R85 SIC FOR 44829/929 (A9) RESISTOR-FIXED METAL-FILM 392R +/- 1% 250mW 200V : St 2 Iss M/S D/I 50 ppm/DEG.C, SURFACE MOUNTED, SIZE MINI-MELF, (8mm TAPE - 7"REEL).
[illegible]	H [illegible]	0.2 EA	R85 SIC FOR 44829/929 (A9) RESISTOR-FIXED METAL-FILM 511R +/- 1% 250mW 200V : St 2 Iss M/S D/I 50 ppm/DEG.C, SURFACE MOUNTED, SIZE MINI-MELF, (8mm TAPE - 7"REEL).
[illegible]	H [illegible]	0.2 EA	R85 SIC FOR 44829/929 (A9) RESISTOR-FIXED METAL-FILM 562R +/- 1% 250mW 200V : St 2 Iss M/S D/I 50 ppm/DEG.C, SURFACE MOUNTED, SIZE MINI-MELF, (8mm TAPE - 7"REEL).
[illegible]	[illegible]	1 EA	
701	H 44830/104	1 EA	PCB-ASSEMBLY RF OSCILLATOR BOARD C2 (2947): St 0 Iss G M/S D/I
702	H 44830/105	1 EA	PCB-ASSEMBLY RF DIVIDER BOARD C3 (2947): St 0 Iss D M/S D/I
703	H 44830/106	1 EA	PCB-ASSEMBLY BYPASS BOARD C4 (2947): St 0 Iss F M/S D/I
704	H 44830/107	1 EA	PCB-ASSEMBLY BFO BOARD C5 (2947): St 0 Iss G M/S D/I
705	H 44830/108	1 EA	PCB-ASSEMBLY RF TRAY INTERCONN SIG GEN C6 (2947): St 0 Iss D M/S D/I
706	H 44830/113	1 EA	PCB-ASSEMBLY FRACTIONAL N CONTROLLER C1. (2947): St 0 Iss 001 M/S D/I
709	C 13860/105	0.031 EA	GASKET-RF LINEAR-FINGER-STRIP, SINGLE-EDGED, : St 3 Iss M/S D/I BERYLLIUM COPPER, BRIGHT, 0.004inTHK, 0.58in WDE, 0.23inHI, 0.375inPITCH, SELF-ADHESVE, 24in STRIPS.
710	A 41700/784	1 EA	FABRICATED-PART STEEL, RF TRAY, TIN PL, BRIGHT, TO: St 3 Iss 001 M/S D/I BS.1872, 0.8 mm THK MATL, 324mm LG, 247mm WD, 29mm HI, SOLDERED JOINTS, SPOTWELD, VARIOUS FITMENTS.
711	A 41690/613	1 EA	FABRICATED-PART ALUMINIUM, TRAY LID, ALOCROM-1000 : St 3 Iss 001 M/S D/I FINISH, 0.8 & 1.6 mm THK MATL, 319.88mm LONG, 186.07mm WIDE, 5mm HIGH, SPOTWELDED.
715	D 43138/746	1 EA	C2 TO RF TRAY WIRE-LEAD-CRIMPED 5 WIRE, 7/0.2mm, CRIMP HOUSING 6: St 3 Iss 001 M/S D/I WAY, KEY POS 2, - FREE END, STRIPPED 12mm, 135mm LONG, SLEEVE FITTED.
716	D 43138/747	2 EA	C2,C3 TO RF TRAY WIRE-LEAD-CRIMPED 6 WIRE, 7/0.2mm, CRIMP HOUSING 7: St 3 Iss 001 M/S D/I WAY, KEY POS 2, - FREE END, STRIPPED 12mm, 135mm LONG, SLEEVE FITTED.
717	D 43138/742	1 EA	C3 TO RF TRAY WIRE-LEAD-CRIMPED 4 WIRE, 7/0.2mm, CRIMP HOUSING 5: St 3 Iss 001 M/S D/I WAY, KEY POS 2, - FREE END, STRIPPED 12mm, 100mm LONG, SLEEVE FITTED.

Cir. Ref.	MI part number	Qty	Description
Overall assembly A0 (contd.)			
718	D 43138/740	1 EA	C4 TO RF TRAY WIRE-LEAD-CRIMPED 3 WIRE, 7/0.2mm, CRIMP HOUSING 4: St 3 Iss 001 M/S D/I WAY, KEY POS 2, - FREE END, STRIPPED 12mm, 110mm LONG, SLEEVE FITTED.
719	D 43138/741	1 EA	C5 TO RF TRAY WIRE-LEAD-CRIMPED 3 WIRE, 7/0.2mm, CRIMP HOUSING 5: St 3 Iss 001 M/S D/I WAY, KEY POS 2, - FREE END, STRIPPED 12mm, 110mm LONG, SLEEVE FITTED.
720	D 43138/748	1 EA	CROSS-TRAY WIRING SET-OF-LEADS CABLE-FORMED, 2947, WIRE LEAD, : St 3 Iss 001 M/S D/I COMPRISING 4 -7/0.2mm, STRIPPED 12mm EACH END, SLEEVED TOGETHER, 370mm LONG.
722	D 43138/744	1 EA	C1 TO C2 COAX RF-CABLE-FLEXIBLE RG178B/U, 50 OHMS, CRIMP SKT : St 3 Iss 001 M/S D/I HOUSING 5 WAY, KEY POS 2, - CRIMP SKT HOUSING 3 WAY, & 2 WAY, 2-LEADS, 90 & 140mm LONG, NO SLVES.
725	D 43138/750	1 EA	MOD. AND CLOCK DRIVE SET-OF-LEADS CABLE-FORMED, 2947, RF LEADS, : St 3 Iss 001 M/S D/I COMPRISING 3 -COAX LEADS, CRIMP HOUSINGS FITTED, SLEEVED TOGETHER, 775mm, 925mm & 1075mm LONG.
728	F 43138/780	1 EA	C TRAY TO C2 PLH RF-CABLE-FLEXIBLE RG178B/U, 50 OHMS, CRIMP SKT : St 3 Iss 001 M/S D/I HOUSING 3 WAY, - UNTERMINATED 25mm PIGTAIL, 175mm LONG, MARKED SLEEVES FITTED.
729	F 43138/781	1 EA	C TRAY TO C1 PLB RF-CABLE-FLEXIBLE RG178B/U, 50 OHMS, CRIMP SKT : St 3 Iss 001 M/S D/I HOUSING 3 WAY, - UNTERMINATED 25mm PIGTAIL, 125mm LONG, MARKED SLEEVES FITTED.
730	F 43138/782	1 EA	C TRAY TO C2 PLG RF-CABLE-FLEXIBLE RG178B/U, 50 OHMS, CRIMP SKT : St 3 Iss 001 M/S D/I HOUSING 2 WAY, - UNTERMINATED 25mm PIGTAIL, 175mm LONG, SLEEVE & MARKED SLEEVES FITTED.
731	F 43138/777	1 EA	B3/MEMCARD RIBBON CABLE RIBBON-LEAD 34 WAY, SOCKET 34 WAY, - SOCKET 34 : St 3 Iss 001 M/S D/I WAY, 2-OFF, CHAINED, FLAT MULTICOLOUR CABLE, 560mm LONG.
732	F 43138/778	1 EA	B3 SIGNAL CABLES SET-OF-LEADS CABLE-FORMED, 2947, RF-CABLES, : St 3 Iss 002 M/S D/I COMPRISING 4 -COAX LEADS, CRIMP HOUSINGS FITTED, TIED TOGETHER, 860mm LNG, PACKED IN BAG.
	31739/982		LABEL-MARKED POLYESTER, MARKING "11-32v DC", BLACK ON ALUMINIUM, SELF ADHESIVE, 25mm LONG, 8mm WIDE.

Cir. Ref.	MI part number	Qty	Description

1.28 GHz - 2.41 GHz oscillator AA1

When ordering, prefix circuit reference with AA1

	44830-160	Complete unit	Issue C
[illegible]	[illegible]	REF ONLY EA	SS 1 CIRCUIT DIAG 1.28GHz - 2.45GHz OSCILLATOR (2945): St 0 Iss 001 M/S D/I
002	B* 31830/160	1 EA	BOARD-DETAIL 1.28GHz - 2.45GHz OSCILLATOR (2945): St 0 Iss D M/S D/I

Cir. Ref.	MI part number	Qty	Description

Input mixer A2

When ordering, prefix circuit reference with A2.

	44829-922	Complete unit Issue 9
Z 007	Z44829/922	REF ONLY EA #ISS 6 CIRCUIT DIAGRAM 2945 - A2 INPUT MIXER : St 0 Iss 006 M/S D/I
002 008	31739/397	1 EA LABEL-MARKED POLYESTER, CIRCULAR DISC MARKED WITH : St 1 Iss 002 M/S D/I HAND WARNING TRIANGLE, BLACK ON YELLOW, SELF ADHESIVE, 10mm DIA.
004 005	34902/189	1 EA MACHINED-PART RECTANGULAR, RECEIVR COVR BOTTOM, : St 3 Iss 001 M/S D/I ALUMINIUM, ALOCROM-1000 FINISH, 92.8mm LONG, 28.7mm WIDE, 4.5mm THK.
005 005	34902/190	1 EA MACHINED-PART RECTANGULAR, RECEIVER COVER TOP, : St 3 Iss 001 M/S D/I ALUMINIUM, ALOCROM-1000 FINISH, 92.8mm LONG, 28.7mm WIDE, 5mm THK.
008 006	21833/004	7 EA SCREW METRIC-SEMS PAN-HEAD POZIDRIVE, M3, 10 mm : St 1 Iss M/S D/I LONG, STEEL BRIGHT NICKEL PLATE BS.3382, SPRING WASHER, ISO-COARSE-THRD, RECESS No1, BS.3643&4183.
070 008	13860/104	0.031 EA USED ON MIXER TOP COVER GASKET-RF LINEAR-FINGER-STRIP, SINGLE-EDGED, : St 2 Iss M/S D/I BERYLLIUM COPPER, TIN PLATED, 0.003in THK, 0.34in WDE, 0.07in HIGH, SELF ADHESIVE, 16in MIN LENGTHS.
075 008	13880/203	0.065 M USED ON MIXER TOP COVER GASKET-RF CORED-KNITTED-WIRE, MONEL, 0.089mm WIRE,: St 1 Iss M/S D/I OVER FOAM URETHANE CORE, 4.78mm x 3.18mm, SELF ADHESIVE BACKING, ON 500 FOOT - 150 METRE REELS.

Cir. Ref.	MI part number	Qty	Description

2nd & 3rd mixer A3

When ordering, prefix circuit reference with A3.

	44829-923	Complete unit	Issue 12
[illegible]	[illegible]	REF ONLY EA	#ISS 11 CIRCUIT DIAGRAM 2945 - A3 2nd & 3rd MIXER : St 0 Iss 012 M/S D/I
002 010	31739/397	1 EA	LABEL-MARKED POLYESTER, CIRCULAR DISC MARKED WITH : St 1 Iss 002 M/S D/I HAND WARNING TRIANGLE, BLACK ON YELLOW, SELF ADHESIVE, 10mm DIA.
003 012	31739/918	1 EA	LABEL-MARKED POLYIMIDE, MARKED WITH TRIANGLE : St 1 Iss 001 M/S D/I SYMBOL, BLACK ON YELLOW & WHITE AREA FOR THERMAL PRINTNG, SELF ADHESIVE, 38mm LONG, 7mm WIDE.

Cir. Ref.	MI part number	Qty	Description

10.7 MHz IF & Log Amp A4/1

When ordering, prefix circuit reference with A4/1.

	44830-103	Complete unit	Issue 1
Z 001	Z44830/103	REF ONLY EA	ISS 1 CIRC. DIAGRAM 2945 10.7MHz I.F. A4/1. : St 0 Iss 001 M/S D/I
003 001	31739/918	1 EA	LABEL-MARKED POLYIMIDE, MARKED WITH TRIANGLE : St 1 Iss 001 M/S D/I SYMBOL, BLACK ON YELLOW & WHITE AREA FOR THERMAL PRINTNG, SELF ADHESIVE, 38mm LONG, 7mm WIDE.
004 001	31830/103	1 EA	ISS 1 OF SHT.1 BOARD-DETAIL PLATED-THROUGH, 2945, A4/1, 1.6 mm : St 3 Iss 001 M/S D/I THK, 1 oz CU, GLASS/EPOXY, GRADE FR4, 300mm x 55mm - PRODUCED IN MULTIPLES OF 4.

Cir. Ref.	MI part number	Qty	Description

Output amplifier A6/1

When ordering, prefix circuit reference with A6/1.

	44829-925	Complete unit	Issue 2
A 003	Z44829/925	REF ONLY EA	ISS 3 CIRCUIT DIAGRAM 2945, A6/1, OUTPUT AMPLIFIER. : St 0 Iss 003 M/S D/I
001 002	31829/925	1 EA	ISS 3 OF SHT.1 BOARD-DETAIL PLATED-THROUGH, 2945, A6/1, 1.6 mm : St 3 Iss 003 M/S D/I THK, 1 oz CU, GLASS/EPOXY, GRADE FR4, 145mm x 50mm - PRODUCED IN MULTIPLES OF 10.
002 002	31739/397	1 EA	LABEL-MARKED POLYESTER, CIRCULAR DISC MARKED WITH : St 1 Iss 002 M/S D/I HAND WARNING TRIANGLE, BLACK ON YELLOW, SELF ADHESIVE, 10mm DIA.
003 002	31739/918	1 EA	LABEL-MARKED POLYIMIDE, MARKED WITH TRIANGLE : St 1 Iss 001 M/S D/I SYMBOL, BLACK ON YELLOW & WHITE AREA FOR THERMAL PRINTNG, SELF ADHESIVE, 38mm LONG, 7mm WIDE.
004 002	35907/573	1 EA	FABRICATED-PART STEEL, SCREENING ENCLOSURE & LID, : St 3 Iss 002 M/S D/I HOT TIN DIPPED, 0.9 mm THK MATL, 49.2mm LONG, 34mm WIDE, 16mm HIGH.
006 002	13860/101	0.01 M	GASKET-RF LINEAR-FINGER-STRIP, DOUBLE-EDGED, : St 1 Iss M/S D/I BERYLLIUM COPPER, BRIGHT FINISH, 0.004in THK, 0.94 in WDE, DISHED, 0.37in PTCH FINGERS, IN 25FT COIL.
010 002	[illegible]	1 EA	WASHER METRIC, CRINKLE, M3, 6.4mm O/D, 3.2mm I/D, : St 1 Iss M/S D/I 0.16mm THK, 0.46mm MIN SET, BERYLLIUM COPPER, NICKL+ZINC PL &PASS, TO BS.1706, BS.4463
012 002	21178/201	1 EA	SPACER ROUND, UNTAPPED, 3.2 mm I/D, 6 mm O/D, 2 mm: St 1 Iss M/S D/I LONG, BRASS, ELECTRO-NICKEL PLTE.
018 002	21882/108	1 EA	NUT METRIC, FULL, HEXAGONAL, M3, 5.5mm A/F, 2.4mm : St 1 Iss M/S D/I THK, STEEL, ZINC PL & PASS, TO BS.3382-PT.2, ISO-METRIC-COARSE THREAD BS.3643 & 3692.
020 002	21833/001	1 EA	SCREW METRIC-SEMS PAN-HEAD POZIDRIVE, M3, 8 mm : St 1 Iss M/S D/I LONG, STEEL BRIGHT NICKEL PLATE BS.3382, SPRING WASHER, ISO-COARSE-THRD, RECESS No1, BS.3643&4183.
130 003	13860/105	0.0785EA	GASKET-RF LINEAR-FINGER-STRIP, SINGLE-EDGED, : St 3 Iss M/S D/I BERYLLIUM COPPER, BRIGHT, 0.004inTHK, 0.58in WDE, 0.23inHI, 0.375inPITCH, SELF-ADHESVE, 24in STRIPS.

Cir. Ref.	MI part number	Qty	Description

1st local oscillator control A7/1

When ordering, prefix circuit reference with A7/1.

	448830-111	Complete unit	Issue 1
Z 001	Z44830/111	REF ONLY EA	#ISS 1 CIRC. DIAGRAM A7/1 FIRST LO CONTROL (2945) : St 0 Iss 001 M/S D/I
002	A 31739/918	1 EA	LABEL-MARKED POLYIMIDE, MARKED WITH TRIANGLE : St 1 Iss 001 M/S D/I SYMBOL, BLACK ON YELLOW & WHITE AREA FOR THERMAL PRINTNG, SELF ADHESIVE, 38mm LONG, 7mm WIDE.

Cir. Ref.	MI part number	Qty	Description

1st local oscillator A8/1

When ordering, prefix circuit reference with A8/1.

	44830-112	Complete unit	Issue 2
Z 002	Z44830'112	REF ONLY EA	SS 2 CIRC. DIAGRAM A8/1 FIRST LO (2945) : St 0 Iss 002 M/S D/I
001 001	31739/918	1 EA	LABEL-MARKED POLYIMIDE, MARKED WITH TRIANGLE : St 1 Iss 001 M/S D/I SYMBOL, BLACK ON YELLOW & WHITE AREA FOR THERMAL PRINTNG, SELF ADHESIVE, 38mm LONG, 7mm WIDE.
002 001	31830'112	1 EA	ISS 1 OF SHT.1 BOARD-DETAIL PLATED-THROUGH, 2945A, A8/1, 1.6 mm : St 3 Iss 001 M/S D/I THK, 1 oz CU, GLASS/EPOXY, GRADE FR4, 145mm x 60mm - PRODUCED IN MULTIPLES OF 6.
004 003	34902'005	1 EA	MACHINED-PART RECTANGULAR, RF COVER TOP AE2, : St 3 Iss 002 M/S D/I ALUMINIUM, ALOCROM-1000 FINISH, 39.08mm LONG, 31.4mm WIDE, 13mm THK.
005 003	44830'160	1 EA	PCB-ASSEMBLY 1.28GHz - 2.41GHz OSCILLATOR (2945): St 0 Iss C M/S D/I
008 001	23435/990	1 EA	FOR PLD CONNECTOR SHORTING, SOCKET, 2 WAY, FOR 0.64mm SQ : St 1 Iss M/S D/I PINS, 2.54mm PITCH, 9.6mm HIGH, FREE MOUNTING, CONTACTS GOLD PLATED TO CLASS 1, BLUE BODY.
104 003	21833/006	4 EA	SCREW METRIC-SEMS PAN-HEAD POZIDRIVE, M3, 16 mm : St 1 Iss M/S D/I LONG, STEEL BRIGHT NICKEL PLATE BS.3382, SPRING WASHER, ISO-COARSE-THRD, RECESS No1, BS.3643&4183.
107 003	21882/108	4 EA	NUT METRIC, FULL, HEXAGONAL, M3, 5.5mm A/F, 2.4mm : St 1 Iss M/S D/I THK, STEEL, ZINC PL & PASS, TO BS.3382-PT.2, ISO-METRIC-COARSE THREAD BS.3643 & 3692.

Cir. Ref.	MI part number	Qty	Description

2nd & 3rd local oscillator A9/1

When ordering, prefix circuit reference with A9/1.

	44830-097	Complete unit	Issue 5
Z 004	Z44830/097	REF ONLY EA	#ISS 5 CIRCUIT DIAGRAM 2945 2ND & 3RD LO A9/1 : St 0 Iss 005 M/S D/I
003 005	31739/918	1 EA	LABEL-MARKED POLYIMIDE, MARKED WITH TRIANGLE : St 1 Iss 001 M/S D/I SYMBOL, BLACK ON YELLOW & WHITE AREA FOR THERMAL PRINTNG, SELF ADHESIVE, 38mm LONG, 7mm WIDE.
004 005	34902/005	1 EA	MACHINED-PART RECTANGULAR, RF COVER TOP AE2, : St 3 Iss 002 M/S D/I ALUMINIUM, ALOCROM-1000 FINISH, 39.08mm LONG, 31.4mm WIDE, 13mm THK.
005 002	37590/855	2 EA	FOR XL1 MOULDED-PART POLYACETAL, PAD, NATURAL COLOUR, 11mm: St 3 Iss 003 M/S D/I LONG, 5mm WIDE, 1.5mm HIGH.
006 005	21833/006	4 EA	SCREW METRIC-SEMS PAN-HEAD POZIDRIVE, M3, 16 mm : St 1 Iss M/S D/I LONG, STEEL BRIGHT NICKEL PLATE BS.3382, SPRING WASHER, ISO-COARSE-THRD, RECESS No1, BS.3643&4183.
006.1 005	21882/108	4 EA	NUT METRIC, FULL, HEXAGONAL, M3, 5.5mm A/F, 2.4mm : St 1 Iss M/S D/I THK, STEEL, ZINC PL & PASS, TO BS.3382-PT.2, ISO-METRIC-COARSE THREAD BS.3643 & 3692.

Cir. Ref.	MI part number	Qty	Description

90 MHz swept local oscillator A10

When ordering, prefix circuit reference with A10.

	44829-930	Complete unit	Issue 8
[illegible]	[illegible]	REF ONLY EA	#ISS 4 CIRCUIT DIAGRAM 2945 - A10 90MHz SWEPT LO : St 0 Iss 004 M/S D/I
002 007	31739/397	1 EA	LABEL-MARKED POLYESTER, CIRCULAR DISC MARKED WITH : St 1 Iss 002 M/S D/I
			HAND WARNING TRIANGLE, BLACK ON YELLOW, SELF ADHESIVE, 10mm DIA.

Cir. Ref.	MI part number	Qty	Description

Input switch and power meter A11/1

When ordering, prefix circuit reference with A11.

	44830-163	Complete unit	Issue 1
002 Z 001	Z44830/163	REF ONLY EA	#ISS 1 CIRC.DIAGRAM INPUT SWITCH A11/1 (2945): St 0 Iss 001 M/S D/I
A	31739/918	1 EA	LABEL-MARKED POLYIMIDE, MARKED WITH TRIANGLE : St 1 Iss 001 M/S D/I SYMBOL, BLACK ON YELLOW & WHITE AREA FOR THERMAL PRINTNG, SELF ADHESIVE, 38mm LONG, 7mm WIDE.
004 A	35907/380	1 EA	ETCHED-PART BRASS, SCREEN PCB A11, TIN PL, BRIGHT,: St 3 Iss 001 M/S D/I TO BS.1872, 0.5 mm THK MATL, 102mm LONG, 19.5mm WIDE.

Cir. Ref.	MI part number	Qty	Description

SSB demodulator A15

When ordering, prefix circuit reference with A15.

	44830-021	Complete unit	Issue 2
[illegible]	[illegible]	REF ONLY EA	#ISS 1 CIRCUIT DIAGRAM SSB DEMODULATOR A15 (2945): St 0 Iss 001 M/S D/I
001 001	31830/021	1 EA	#ISS 1 BOARD-DETAIL PLATED-THROUGH, 2945, A15, 1.6 mm : St 3 Iss 001 M/S D/I THK, 1 oz CU, GLASS/EPOXY, GRADE FR4, 113mm x 56mm -
002 001	31739/397	1 EA	LABEL-MARKED POLYESTER, CIRCULAR DISC MARKED WITH : St 1 Iss 002 M/S D/I HAND WARNING TRIANGLE, BLACK ON YELLOW, SELF ADHESIVE, 10mm DIA

Cir. Ref.	MI part number	Qty	Description

3 stage attenuator A20

When ordering, prefix circuit reference with A2.

	44829-891	Complete unit	Issue 5
Z 005	Z44829/891	1 EA	#ISS 1 CIRCUIT DIAGRAM LOW COST ATTENUATOR AT1 : St 0 Iss 001 M/S D/I
001 005	31739/918	1 EA	LABEL-MARKED POLYIMIDE, MARKED WITH TRIANGLE : St 1 Iss 001 M/S D/I SYMBOL, BLACK ON YELLOW & WHITE AREA FOR THERMAL PRINTNG, SELF ADHESIVE, 38mm LONG, 7mm WIDE.

Cir. Ref.	MI part number	Qty	Description

2 stage attenuator A21

When ordering, prefix circuit reference with A21.

	44829-892	Complete unit	Issue 6
Z 006	Z44829/892	REF ONLY EA	#ISS 2 CIRCUIT DIAGRAM DUPLEX ATTENUATOR BOARD : St 0 Iss 002 M/S D/I
001 005	31739/918	1 EA	LABEL-MARKED POLYIMIDE, MARKED WITH TRIANGLE : St 1 Iss 001 M/S D/I SYMBOL, BLACK ON YELLOW & WHITE AREA FOR THERMAL PRINTNG, SELF ADHESIVE, 38mm LONG, 7mm WIDE.

Cir. Ref.	MI part number	Qty	Description

Audio processor board B1/2

When ordering, prefix circuit reference with B1/2.

	44830-180	Complete unit	Issue 1
Z A	Z44830/180	REF ONLY EA	#ISS 1 CIRCUIT DIAGRAM AUDIO PROCESSOR B1-2 (2945A): St 0 Iss 001 M/S D/I
002 A	31739/918	1 EA	LABEL-MARKED POLYIMIDE, MARKED WITH TRIANGLE : St 1 Iss 001 M/S D/I SYMBOL, BLACK ON YELLOW & WHITE AREA FOR THERMAL PRINTNG, SELF ADHESIVE, 38mm LONG, 7mm WIDE.
004 A	21177/648	1 EA	FOR IC19 WASHER METRIC, CRINKLE, M3, 6.4mm O/D, 3.2mm I/D, : St 1 Iss M/S D/I 0.16mm THK, 0.46mm MIN SET, BERYLLIUM COPPER, NICKL+ZINC PL &PASS, TO BS.1706, BS.4463.
004.3 A	21836/109	1 EA	FOR IC19 SCREW METRIC PAN-HEAD POZIDRIVE, M3, 6 mm LONG, : St 2 Iss M/S D/I STEEL BRIGHT NICKEL PLATE TO BS.3382-PT.3, ISO-COARSE-THREAD, RECESS No1, BS.3643 & 4183.
004.6 A	21882/108	1 EA	FOR IC19 NUT METRIC, FULL, HEXAGONAL, M3, 5.5mm A/F, 2.4mm : St 1 Iss M/S D/I THK, STEEL, ZINC PL & PASS, TO BS.3382-PT.2, ISO-METRIC-COARSE THREAD BS.3643 & 3692.
006 A	23435/990	2 EA	CONNECTOR SHORTING, SOCKET, 2 WAY, FOR 0.64mm SQ : St 1 Iss M/S D/I PINS, 2.54mm PITCH, 9.6mm HIGH, FREE MOUNTING, CONTACTS GOLD PLATED TO CLASS 1, BLUE BODY.
286 A	28488/045	2 EA	FOR IC3,4 SOCKET INTEGRATED-CIRCUIT, 28 WAY, DUAL-IN-LINE, : St 1 Iss M/S D/I 15.24mm ROW PITCH, LOW-PROFILE, TURNED PIN, COLLET, POLYESTER BODY, BERYLLIUM COPPER CONTACTS.
290 A	44533/434	REF ONLY EA	IC3 IC-PROGRAMMED EPROM, SET OF 1, 2945, WAVEFORM : St 3 Iss 001 M/S D/I GENERATOR 1.
291 A	44533/435	REF ONLY EA	IC4 IC-PROGRAMMED EPROM, SET OF 1, 2945, WAVEFORM : St 3 Iss 001 M/S D/I GENERATOR 2.

Cir. Ref.	MI part number	Qty	Description

Microprocessor B2/1

When ordering, prefix circuit reference with B2/1.

44830-110 Complete unit Issue 2

Assembly No : 44830/110 Issue : 002 Stat : AUTHORISED Week :

050 C 31739/918	1 EA	LABEL-MARKED POLYIMIDE, MARKED WITH TRIANGLE SYMBOL, BLACK ON YELLOW & WHITE AREA FOR THERMAL PRINTNG, SELF ADHESIVE, 38mm LONG, 7mm WIDE.	: St 1 Iss 001 M/S D/I
105 A 23435/120	0.2 EA	FOR PLS CONNECTOR MULTIWAY, PCB HEADER, 36 WAY, RIGHT ANGLED, 2.54mm PITCH, PINS GOLD PLATED TO CLASS 2, 0.64mm SQUARE, 2.57mm LONG TAILS, 1.4mm OFFSET.	: St 2 Iss M/S D/I

Cir. Ref.	MI part number	Qty	Description

Analogue cellular B3/1

When ordering, prefix circuit reference with B3/1.

	44830-181	Complete unit	Issue B
Z A	Z44830/181	REF ONLY EA	CIRCUIT DIAGRAM ANALOGUE CELLULAR CONTROLLER B3/1 : St 0 Iss M/S D/I (2945)
010 A	31739/397	1 EA	LABEL-MARKED POLYESTER, CIRCULAR DISC MARKED WITH : St 1 Iss 002 M/S D/I HAND WARNING TRIANGLE, BLACK ON YELLOW, SELF ADHESIVE, 10mm DIA.
015 A	31830/181	1 EA	BOARD-DETAIL ANALOGUE CELLULAR CONTROLLER B3/1 : St 0 Iss M/S D/I (2945)
250 A	28488/187	4 EA	SOCKETS FOR IC16-19 SOCKET INTEGRATED-CIRCUIT, 32 WAY, DUAL-IN-LINE, : St 1 Iss M/S D/I 15.24mm ROW PITCH, LOW-PROFILE, TURNED PIN, COLLET, POLYESTER BODY, BERYLLIUM COPPER CONTACTS.

Cir. Ref.	MI part number	Qty	Description

600 Ω interface B4

When ordering, prefix circuit reference with B4.

44829-972	Complete unit	Issue 4
Z 004 Z44829/972	REF ONLY EA	#ISS 3 CIRCUIT DIAGRAM - 600 OHM INTERFACE : St 0 Iss 003 M/S D/I
004 003 31739/397	1 EA	LABEL-MARKED POLYESTER, CIRCULAR DISC MARKED WITH : St 1 Iss 002 M/S D/I HAND WARNING TRIANGLE, BLACK ON YELLOW, SELF ADHESIVE, 10mm DIA.
010 004 23435/188	13 EA	#PLA,PLB TERMINAL CONNECTOR-PIN, 0.64mm SQUARE, 5.97mm : St 1 Iss M/S D/I HIGH, PCB-MOUNTING, SINGLE-ENDED, PHOSPHOR BRONZE, GOLD PLATED CLASS 2, REELED.
010 1 004 23435 188	REF ONLY EA	#1>4 TERMINAL CONNECTOR-PIN, 0 64mm SQUARE, 5.97mm : St 1 Iss M/S D/I HIGH, PCB-MOUNTING, SINGLE-ENDED, PHOSPHOR BRONZE, GOLD PLATED CLASS 2, REELED

Cir. Ref.	MI part number	Qty	Description

GPIB interface B7

When ordering, prefix circuit reference with B7.

	44829-991	Complete unit	Issue 1
Z A	Z44829/991	REF ONLY EA	CIRCUIT DIAGRAM GPIB INTERFACE (2945) : St 0 Iss 001 M/S D/I
002 001	31739/397	1 EA	LABEL-MARKED POLYESTER, CIRCULAR DISC MARKED WITH : St 1 Iss 002 M/S D/I HAND WARNING TRIANGLE, BLACK ON YELLOW, SELF ADHESIVE, 10mm DIA.
003 001	31829/991	1 EA	BOARD-DETAIL PLATED-THROUGH, 2945, GPIB, 1.6 mm : St 3 Iss 001 M/S D/I THK, 1 oz CU, GLASS/EPOXY, GRADE FR4, 93mm x 81mm -
005 001	34900/849	2 EA	MACHINED-PART SQUARE, BRACKET MOUNTING, BRASS, : St 3 Iss 002 M/S D/I NICKEL PL, BRIGHT, TO BS.1224, 6mm SQR, 4.5mm O/DIA, 15.8mm LONG, M2.5 & M3 TAPPED.
007 001	21177/647	2 EA	WASHER METRIC, CRINKLE, M2.5, 5.8mm O/D, 2.7mm : St 1 Iss M/S D/I I/D, 0.16mm THK, 0.38mm MIN SET, BERYLLIUM COPPER, NICKL+ZINC PL &PASS, TO BS.1706, BS.4463.
009 001	21836/107	2 EA	SCREW METRIC PAN-HEAD POZIDRIVE, M2.5, 6 mm LONG, : St 1 Iss M/S D/I STEEL BRIGHT NICKEL PLATE TO BS.3382-PT.3, ISO-COARSE-THREAD, RECESS No1, BS.3643 & 4183.

Cir. Ref.	MI part number	Qty	Description

Memory card and date/time stamp board B12

When ordering, prefix circuit reference with B12.

448830-114 Complete unit Issue 1

Assembly No : 44830/114 Issue : 002 Stat : Draft Week :

006 001 31739/918	1	EA	LABEL-MARKED POLYIMIDE, MARKED WITH TRIANGLE : St 1 Iss 001 M/S D/I SYMBOL, BLACK ON YELLOW & WHITE AREA FOR THERMAL PRINTNG, SELF ADHESIVE, 38mm LONG, 7mm WIDE.
010 001 31830/114	1	EA	#ISS 1 BOARD-DETAIL MEMORY CARD INTERFACE (2947): St 0 Iss A M/S D/I
012 001 21178/440	2	EA	WASHER METRIC, PLAIN, M2, 5mm O/DIA, 2.15mm I/D, : St 2 Iss M/S D/I 0.5mm THK, NYLON, FINISH AS FROM TOOL, WHITE/OPAQUE.
014 001 21837/241	2	EA	SCREW METRIC PAN-HEAD SLOTTED, M2, 10 mm LONG, : St 7 Iss M/S D/I STEEL ZINC-PL & PASS TO BS.3382-PT.2, ISO-METRIC-COARSE THREAD BS.3643 & 4183.
016 001 21882/105	2	EA	NUT METRIC, FULL, HEXAGONAL, M2, 4mm A/F, 1.6mm : St 1 Iss M/S D/I THK, STEEL, ZINC PL & PASS, TO BS.3382-PT.2, ISO-METRIC-COARSE THREAD BS.3643 & 3692.

Cir. Ref.	MI part number	Qty	Description

RF generator control C1

When ordering, prefix circuit reference with 1.

	44830-113	Complete unit	Issue C
Z 001	Z44830/113	REF ONLY EA	ISSUE 1 CIRC. DIAGRAM 2947 FRAC.N CONTROLLER C1. : St 0 Iss 001 M/S D/I
004	A 31739/918	1 EA	LABEL-MARKED POLYIMIDE, MARKED WITH TRIANGLE : St 1 Iss 001 M/S D/I SYMBOL, BLACK ON YELLOW & WHITE AREA FOR THERMAL PRINTNG, SELF ADHESIVE, 38mm LONG, 7mm WIDE.
005 001	31830/113	1 EA	ISSUE 1 OF SHT.1 BOARD-DETAIL PLATED-THROUGH, 2947, C1, 1.6 mm THK,: St 3 Iss 001 M/S D/I 1 oz CU, GLASS/EPOXY, GRADE FR4, 141mm x 56mm - PRODUCED IN MULTIPLES OF 10.

Cir. Ref.	MI part number	Qty	Description

RF oscillator C2

When ordering, prefix circuit reference with C2.

	44830-104	Complete unit	Issue G
Z A	Z44830/104	REF ONLY EA	CIRCUIT DIAGRAM RF OSCILLATOR BOARD C2 (2947) : St 0 Iss A M/S D/I
001 D	44829/853	1 EA	PCB-ASSEMBLY MIXED TECHNOLOGY, 2965, AF3, VOLTAGE : St 3 Iss 006 M/S D/I CONTROLLED OSCILLATOR.
003 D	31739/918	1 EA	LABEL-MARKED POLYIMIDE, MARKED WITH TRIANGLE : St 1 Iss 001 M/S D/I SYMBOL, BLACK ON YELLOW & WHITE AREA FOR THERMAL PRINTNG, SELF ADHESIVE, 38mm LONG, 7mm WIDE.
005 D	31830/104	1 EA	BOARD-DETAIL RF OSCILLATOR BOARD C2 (2947) : St 0 Iss B M/S D/I
006 D	43138/736	1 EA	RF-CABLE-SEMI-RIGID UT85, 50 OHMS, UNTERMINATED - : St 3 Iss 002 M/S D/I UNTERMINATED , AFTER BENDING 89mm LONG, 21mm WIDE, OUTER STRIPPED 6mm EACH END.
007 D	34901/979	2 EA	MACHINED-PART RECTANGULAR, COVER RF AF3, : St 3 Iss 001 M/S D/I ALUMINIUM, ALOCROM-1000 FINISH, 80.52mm LONG, 41.15mm WIDE, 3.9mm THK.
008 D	34901/980	1 EA	MACHINED-PART RECTANGULAR, SHIELD RF AF3, : St 3 Iss 001 M/S D/I ALUMINIUM, ALOCROM-1000 FINISH, 80.52mm LONG, 41.15mm WIDE, 9mm THK.
010 D	35907/171	1 EA	ETCHED-PART BRASS, SCREEN PCB AF2, TIN PL, BRIGHT,: St 3 Iss 001 M/S D/I TO BS.1872, 0.5 mm THK MATL, 109.28mm LONG, 18.5mm WIDE.
012 D	21833/002	6 EA	SCREW METRIC-SEMS PAN-HEAD POZIDRIVE, M3, 20 mm : St 1 Iss M/S D/I LONG, STEEL BRIGHT NICKEL PLATE BS.3382, SPRING WASHER, ISO-COARSE-THRD, RECESS No1, BS.3643&4183.
013 D	21882/108	6 EA	NUT METRIC, FULL, HEXAGONAL, M3, 5.5mm A/F, 2.4mm : St 1 Iss M/S D/I THK, STEEL, ZINC PL & PASS, TO BS.3382-PT.2, ISO-METRIC-COARSE THREAD BS.3643 & 3692.
130 D	13860/105	0.0785EA	GASKET-RF LINEAR-FINGER-STRIP, SINGLE-EDGED, : St 3 Iss M/S D/I BERYLLIUM COPPER, BRIGHT, 0.004inTHK, 0.58in WDE, 0.23inHI, 0.375inPITCH, SELF-ADHESVE, 24in STRIPS.

Cir. Ref.	MI part number	Qty	Description

RF divider C3

When ordering, prefix circuit reference with C3.

	44830-105	Complete unit	Issue D
Z A	Z44830/105	REF ONLY EA	CIRCUIT DIAGRAM RF DIVIDER BOARD C3 (2947) : St 0 Iss M/S D/I
005 B	31739/918	1 EA	LABEL-MARKED POLYIMIDE, MARKED WITH TRIANGLE : St 1 Iss 001 M/S D/I SYMBOL, BLACK ON YELLOW & WHITE AREA FOR THERMAL PRINTNG, SELF ADHESIVE, 38mm LONG, 7mm WIDE.
006 A	31830/105	1 EA	BOARD-DETAIL RF DIVIDER BOARD C3 (2947) : St 0 Iss A M/S D/I

Clr. Ref.	MI part number	Qty	Description

Bypass board C4

When ordering, prefix circuit reference with C4.

	44830/106	Complete unit	Issue F
Z C	Z44830/160	REF ONLY EA	ISS 1 CIRCUIT DIAG. 1.28GHz - 2.45GHz OSCILLATOR (2945): St 0 Iss 001 M/S D/I
002 B*	31830/160	1 EA	BOARD-DETAIL 1.28GHz - 2.45GHz OSCILLATOR (2945): St 0 Iss D M/S D/I

Cir. Ref.	MI part number	Qty	Description

BFO C5

When ordering, prefix circuit reference with C5.

	44830-107	Complete unit	Issue G
Z 001	Z44830/107	REF ONLY EA	ISS.1 CIRC. DIAGRAM BFO BOARD C5 (2947) : St 0 Iss 001 M/S D/I
001 D	31119/120	2 EA	FABRICATED-PART BERYLLIUM-COPPER, EARTH SPRING, : St 3 Iss 004 M/S D/I TIN PL, BRIGHT, TO BS.1872, 0.13 mm THK MATL, 14mm WIDE, 9mm FORMED HEIGHT.
002 D	31739/918	1 EA	LABEL-MARKED POLYIMIDE, MARKED WITH TRIANGLE : St 1 Iss 001 M/S D/I SYMBOL, BLACK ON YELLOW & WHITE AREA FOR THERMAL PRINTNG, SELF ADHESIVE, 38mm LONG, 7mm WIDE.
003 001	31830/107	1 EA	ISS.1 OF SHT.1 BOARD-DETAIL BFO BOARD C5 (2947) : St 0 Iss 001 M/S D/I
007 D	35907/609	1 EA	ETCHED-PART BRASS, C5 SCREEN, TIN PL, BRIGHT, TO : St 3 Iss 001 M/S D/I BS.1872, 0.5 mm THK MATL, 67.5mm LONG, 18.5mm WIDE, GROOVED.
038 E	13860/105	0.031 EA	GASKET-RF LINEAR-FINGER-STRIP, SINGLE-EDGED, : St 3 Iss M/S D/I BERYLLIUM COPPER, BRIGHT, 0.004inTHK, 0.58in WDE, 0.23inHI, 0.375inPITCH, SELF-ADHESVE, 24in STRIPS.

Cir. Ref.	MI part number	Qty	Description

RF tray interconnection PCB (signal generator) C6

When ordering, prefix circuit reference with C6.

	44830-108	Complete unit	Issue D
Z	D Z44830/108	REF ONLY EA	CIRCUIT DIAGRAM BFO BOARD C5 (2947) : St 0 Iss C M/S D/I
001	D 31739/918	1 EA	LABEL-MARKED POLYIMIDE, MARKED WITH TRIANGLE : St 1 Iss 001 M/S D/I SYMBOL, BLACK ON YELLOW & WHITE AREA FOR THERMAL PRINTNG, SELF ADHESIVE, 38mm LONG, 7mm WIDE.
002	D 31830/108	1 EA	ISSUE A BOARD-DETAIL RF TRAY INTERCONNECTION SIG GEN(2947): St 0 Iss B M/S D/I
006 1	D 23435/186	11 EA	PLB(5),PLC(3),PLD(3) TERMINAL CONNECTOR-PIN, 0 64mm SQUARE, 5.97mm : St 1 Iss M/S D/I HIGH, PCB-MOUNTING, SINGLE-ENDED, PHOSPHOR BRONZE, GOLD PLATED CLASS 2, REELED.

Cir. Ref.	MI part number	Qty	Description

Voltage controlled oscillator AF3

When ordering, prefix circuit reference with AF3.

	44829-853	Complete unit	Issue 6
Z 006	Z44829/853	REF ONLY EA	#ISS 4 CIRCUIT DIAGRAM AF3 V.C.O. BOARD : St 0 Iss 004 M/S D/I
003 004	31739/397	1 EA	LABEL-MARKED POLYESTER, CIRCULAR DISC MARKED WITH : St 1 Iss 002 M/S D/I HAND WARNING TRIANGLE, BLACK ON YELLOW, SELF ADHESIVE, 10mm DIA.

Chapter 7
SERVICING DIAGRAMS

Contents

Symbols 7-2

List of figures

Fig. 7-1		Overall connection diagram	7-3
Fig. 7-2		RF tray interconnections	7-5
Fig. 7-3		RF tray interconnections (Receiver)	7-7
Fig. 7-4		RF tray interconnections	7-9
Fig. 7-5		RF tray interconnections (Generator)	7-11
Fig. 7-6		Overall connection diagram (options)	7-13
Fig. 7-7	AA1	1.28 GHz - 2.41 GHz oscillator	7-14
Fig. 7-8	A2	Component layout of input mixer	7-16
Fig. 7-9	A2	Input mixer	7-17
Fig. 7-10	A3	Component layout of 2nd and 3rd mixer	7-18
Fig. 7-11	A3	2nd and 3rd mixer	7-19
Fig. 7-12	A4/1	Component layout of 10.7 MHz If & Log Amp	7-20
Fig. 7-13	A4/1	10.7 MHz IF & Log Amp	7-21
Fig. 7-14	A4/1	10.7 MHz IF & Log Amp	7-23
Fig. 7-15	A4/1	10.7 MHz IF & Log Amp	7-25
Fig. 7-16	A6/1	Component layout of output amplifier	7-26
Fig. 7-17	A6/1	Output amplifier	7-27
Fig. 7-18	A7/1	Component layout of 1st local oscillator control	7-28
Fig. 7-19	A7/1	1st local oscillator Control	7-29
Fig. 7-20	A8/1	Component layout of 1st local oscillator	7-30
Fig. 7-21	A8/1	1st local oscillator	7-31
Fig. 7-22	A8/1	1st local oscillator	7-33
Fig. 7-23	A9/1	Component layout of 2nd and 3rd local oscillator	7-34
Fig. 7-24	A9/1	2nd and 3rd local oscillator	7-35
Fig. 7-25	A9/1	Assembly drawing of 2nd and 3rd local oscillator	7-36
Fig. 7-26	A9/1	2nd and 3rd local oscillator	7-37
Fig. 7-27	A10	Component layout of 90 MHz swept local oscillator	7-38
Fig. 7-28	A10	90 MHz swept local oscillator	7-39
Fig. 7-29	A11/1	Component layout of input switch and power meter	7-40
Fig. 7-30	A11/1	Input switch and power meter	7-41
Fig. 7-31	A11/1	Input switch and power meter	7-43
Fig. 7-32	A15	Component layout of SSB board	7-44
Fig. 7-33	A15	SSB board	7-45
Fig. 7-34	A20	Component layout of 3 stage attenuator	7-46
Fig. 7-35	A20	3 stage attenuator	7-47
Fig. 7-36	A21	Component layout of 2 stage attenuator	7-48
Fig. 7-37	A21	2 stage attenuator	7-49
Fig. 7-38	AF3	Component layout of Voltage controlled oscillator	7-50
Fig. 7-39	AF3	Voltage controlled oscillator	7-51
Fig. 7-40	B1/2	Component layout of Audio processor board - top side	7-52
Fig. 7-41	B1/2	Audio processor - interface	7-53
Fig. 7-42	B1/2	Component layout of audio processor board - under side	7-54
Fig. 7-43	B1/2	Audio processor - synthesizer latches	7-55
Fig. 7-44	B1/2	Audio processor - AF generators	7-57
Fig. 7-45	B1/2	Audio processor - modulation control	7-59
Fig. 7-46	B1/2	Audio processor - demodulators	7-61
Fig. 7-47	B1/2	Audio processor - analyzer latches	7-63
Fig. 7-48	B1/2	Audio processor - analyzer ranging	7-65

List of figures *(contd.)*

Fig. 7-49 B1/2 Audio processor - band filters & L/S drive 7-67
Fig. 7-50 B1/2 Audio processor - IF counter & audio 7-69
Fig. 7-51 B2/1 Component layout of microprocessor board 7-70
Fig. 7-52 B2/1 Microprocessor 7-71
Fig. 7-53 B2/1 Microprocessor 7-73
Fig. 7-54 B2/1 Microprocessor 7-75
Fig. 7-55 B2/1 Microprocessor 7-77
Fig. 7-56 B2/1 Microprocessor 7-79
Fig. 7-57 B3/1 Component layout of analogue cellular controller 7-80
Fig. 7-58 B3/1 Analogue cellular controller 7-81
Fig. 7-59 B3/1 Analogue cellular controller 7-83
Fig. 7-60 B3/1 Analogue cellular controller 7-85
Fig. 7-61 B4 Component layout of 600Ω interface 7-86
Fig. 7-62 B4 600Ω interface 7-87
Fig. 7-63 B7 Component layout of GPIB interface 7-88
Fig. 7-64 B7 GPIB interface 7-89
Fig. 7-65 B12 Component layout of Memory card interface 7-90
Fig. 7-66 B12 Memory card interface 7-91
Fig. 7-67 C1 Component layout of RF generator control 7-92
Fig. 7-68 C1 Assembly drawing of RF generator control 7-93
Fig. 7-69 C1 RF generator control 7-95
Fig. 7-70 C2 Component layout of RF oscillator 7-96
Fig. 7-71 C2 RF oscillator 7-97
Fig. 7-72 C3 Component layout of RF divider 7-98
Fig. 7-73 C3 RF divider 7-99
Fig. 7-74 C4 Component layout of Bypass board 7-100
Fig. 7-75 C4 Bypass board 7-101
Fig. 7-76 C5 Component layout of BFO board 7-102
Fig. 7-77 C5 BFO board 7-103
Fig. 7-78 C6 Component layout of RF tray interconnection PCB 7-104
Fig. 7-79 C6 RF tray interconnection PCB 7-105
Fig. 7-80 Front panel/keyboard 7-107

Power supply module

Fig. 7-81 AC-DC input 7-109
Fig. 7-82 DC-DC input 7-111
Fig. 7-83 Control PCB 7-113
Fig. 7-84 DC output 7-115

Symbols

Symbols are to BS 3939 with the following additions :

Static sensitive component - see Precautions, Page iv.

Tag

Test point

Edge connector

Ferrite bead

Circuit diagram

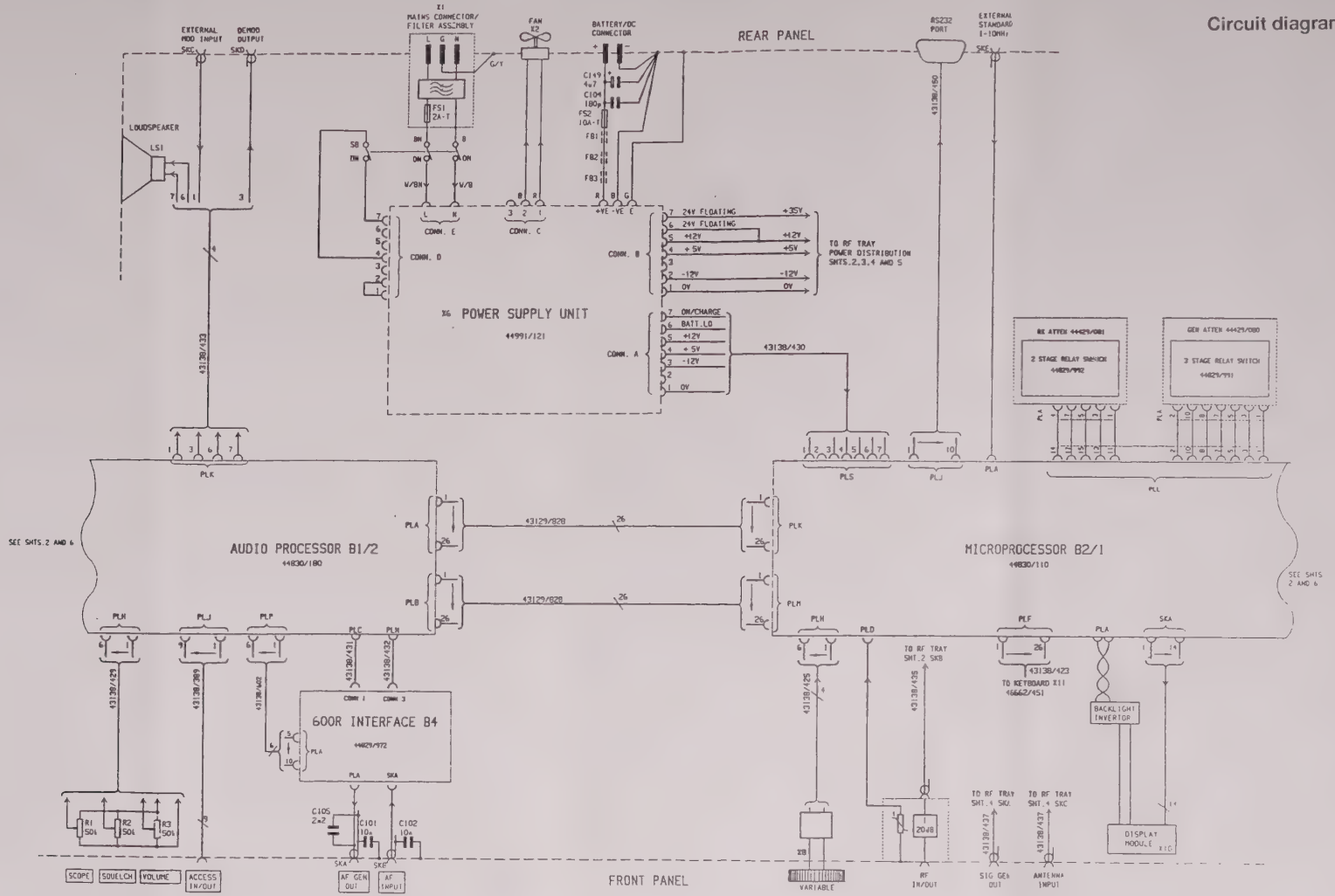

Drg. No. Z44991/200 Sheet 1 of 6

Fig. 7-1 Overall connection diagram

Overall connection diagram

Circuit diagram

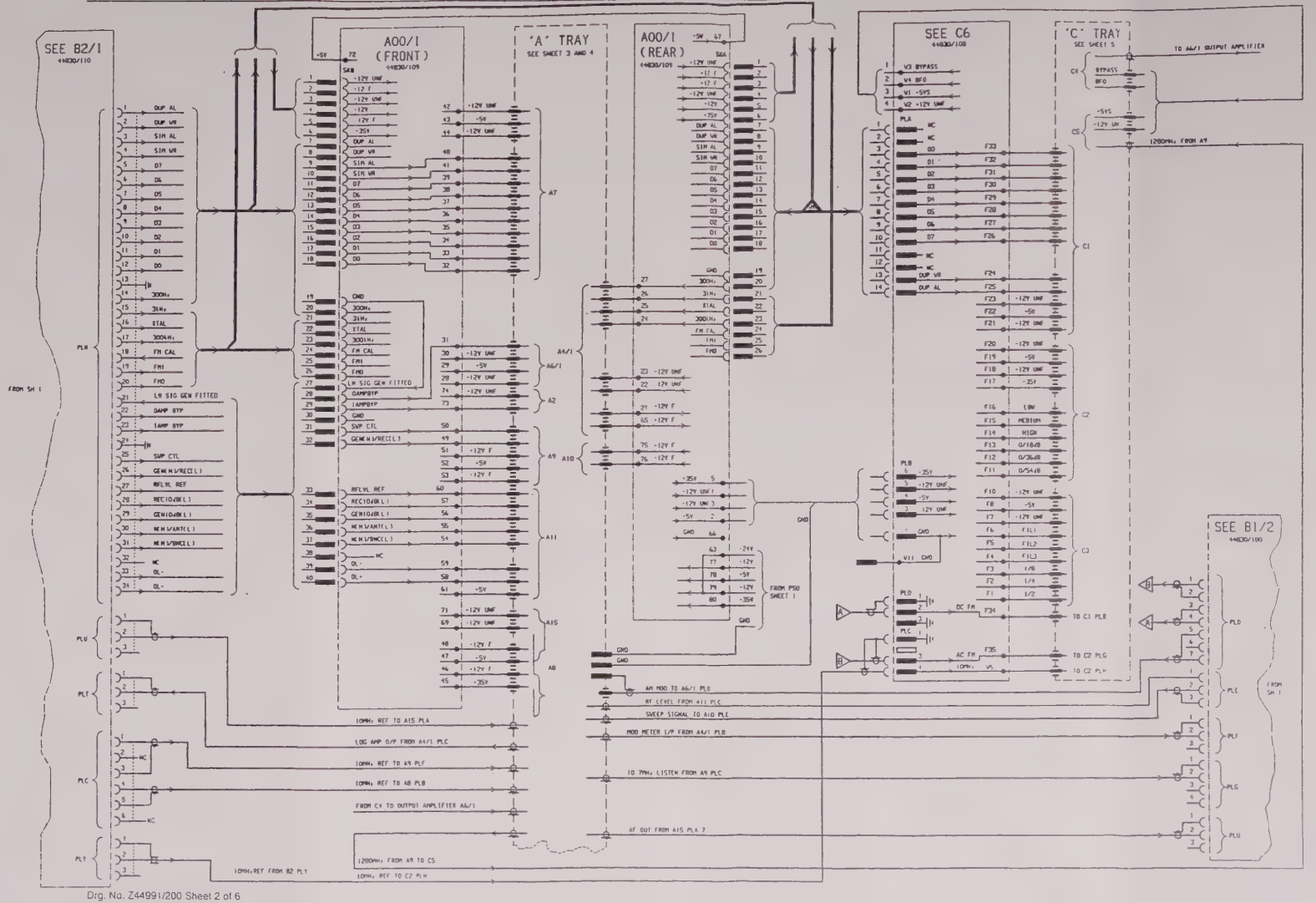

Drg. No. Z44991/200 Sheet 2 of 6

Fig. 7-2 RF tray interconnections

RF tray interconnections

Circuit diagram

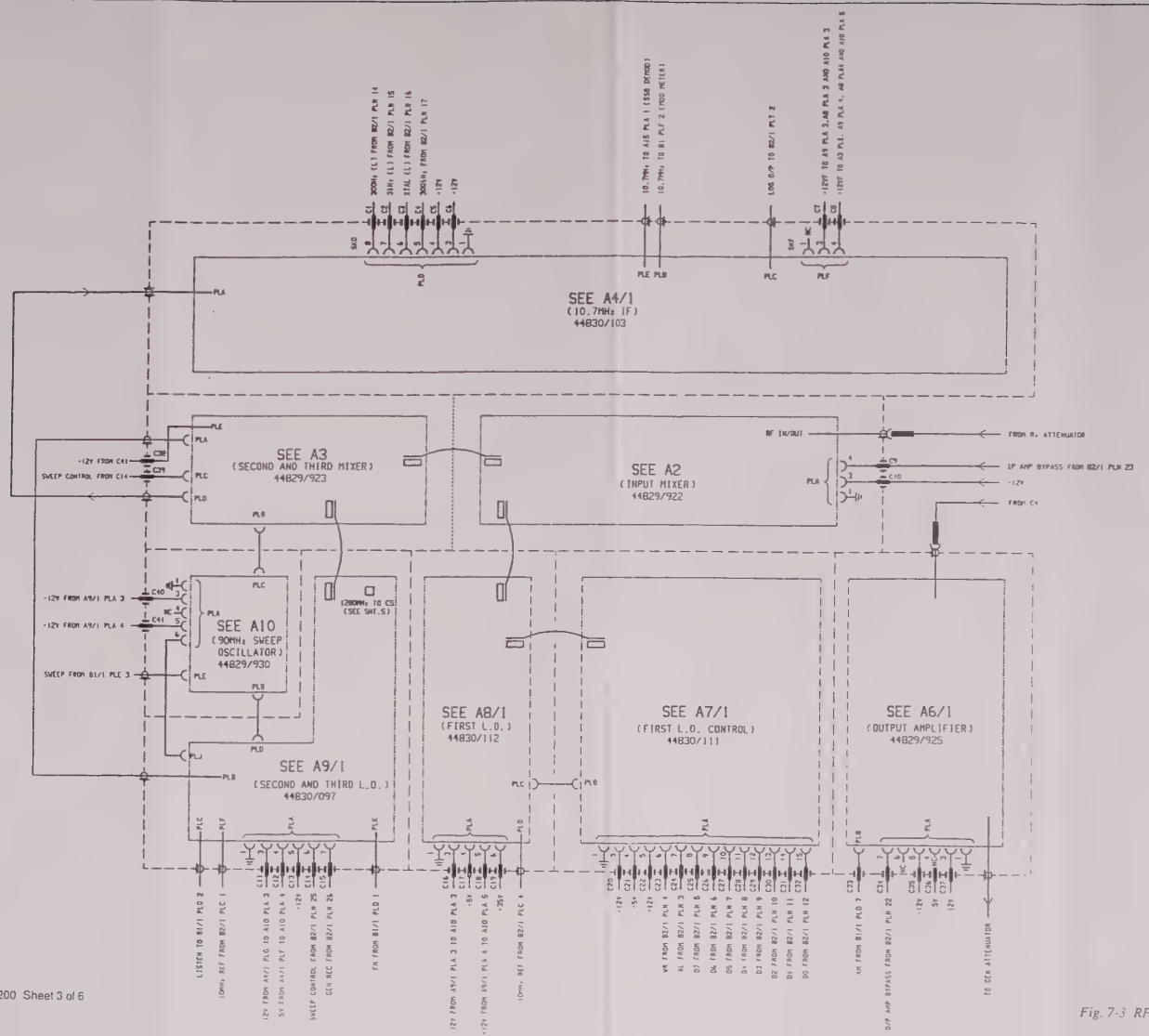

Drg. No. Z44991/200 Sheet 3 of 6

Fig. 7-3 RF tray interconnections (Receiver)

RF tray interconnections (Receiver)

Circuit diagram

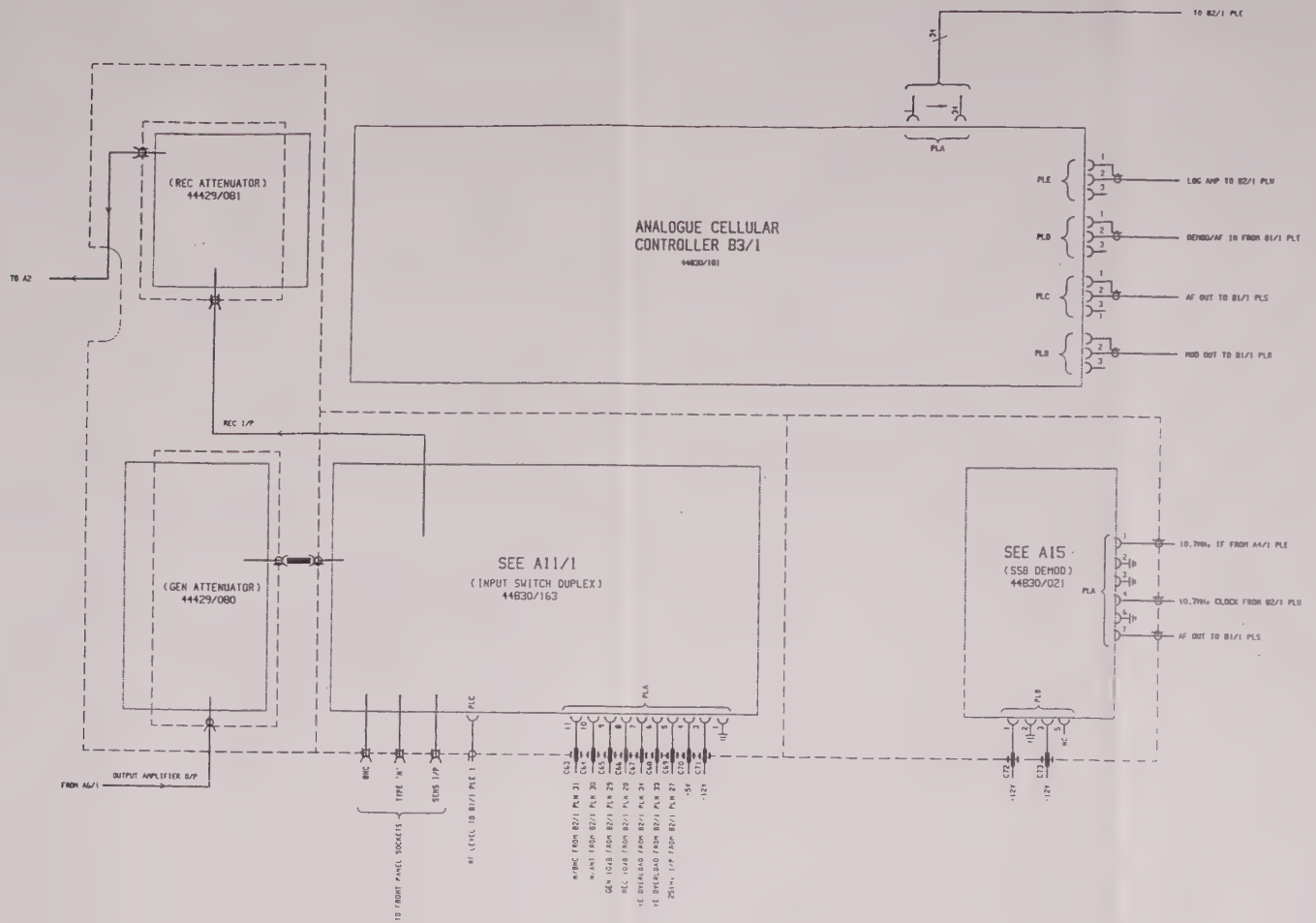

Drg. No. Z44991/200 Sheet 4 of 6

Fig. 7-4 RF tray interconnections

RF tray interconnections

Circuit diagram

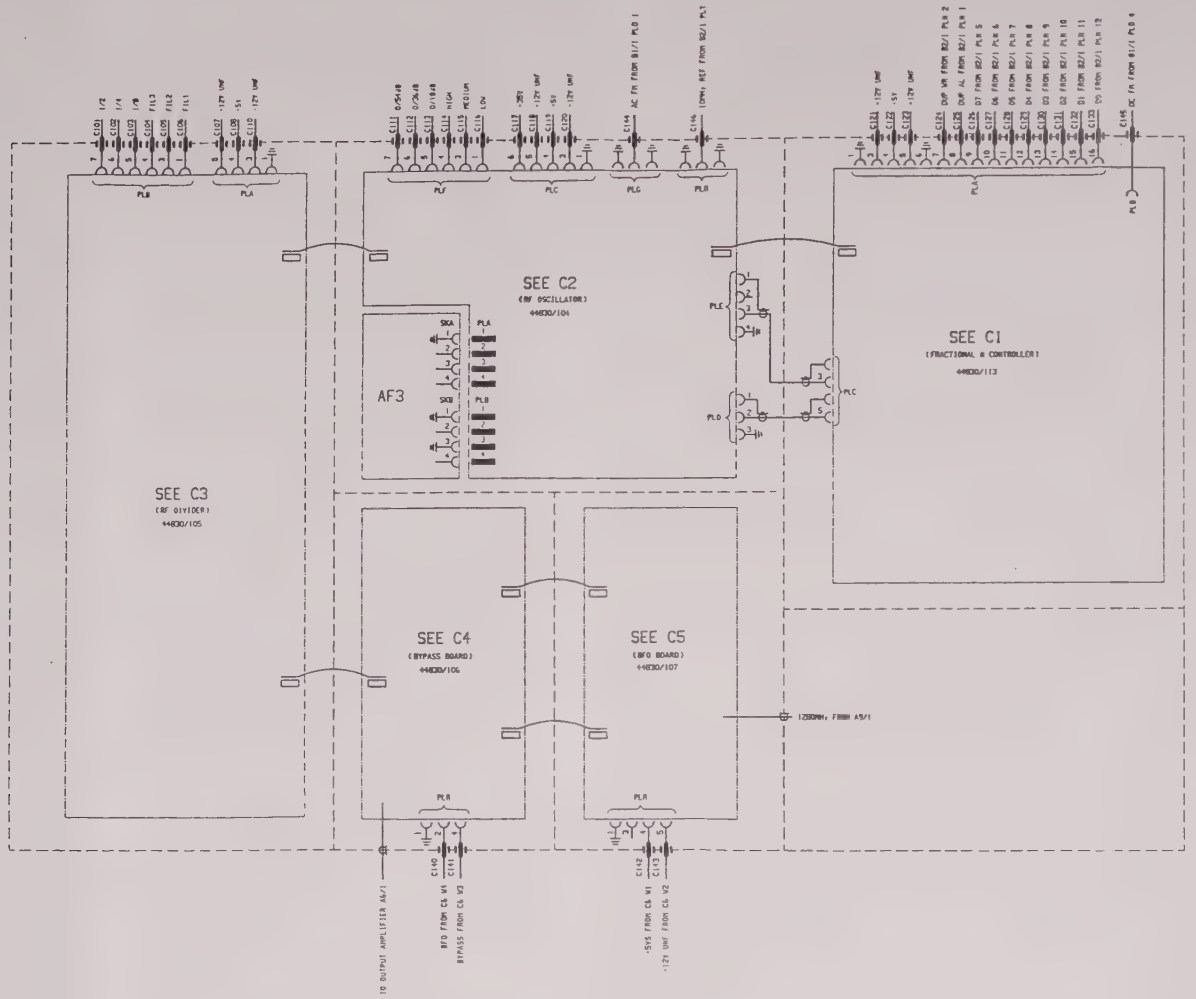

Drg. No. Z44991/200 Sheet 5 of 6

Fig. 7-5 RF tray interconnections (Generator)

RF tray interconnections (Generator)

Circuit diagram

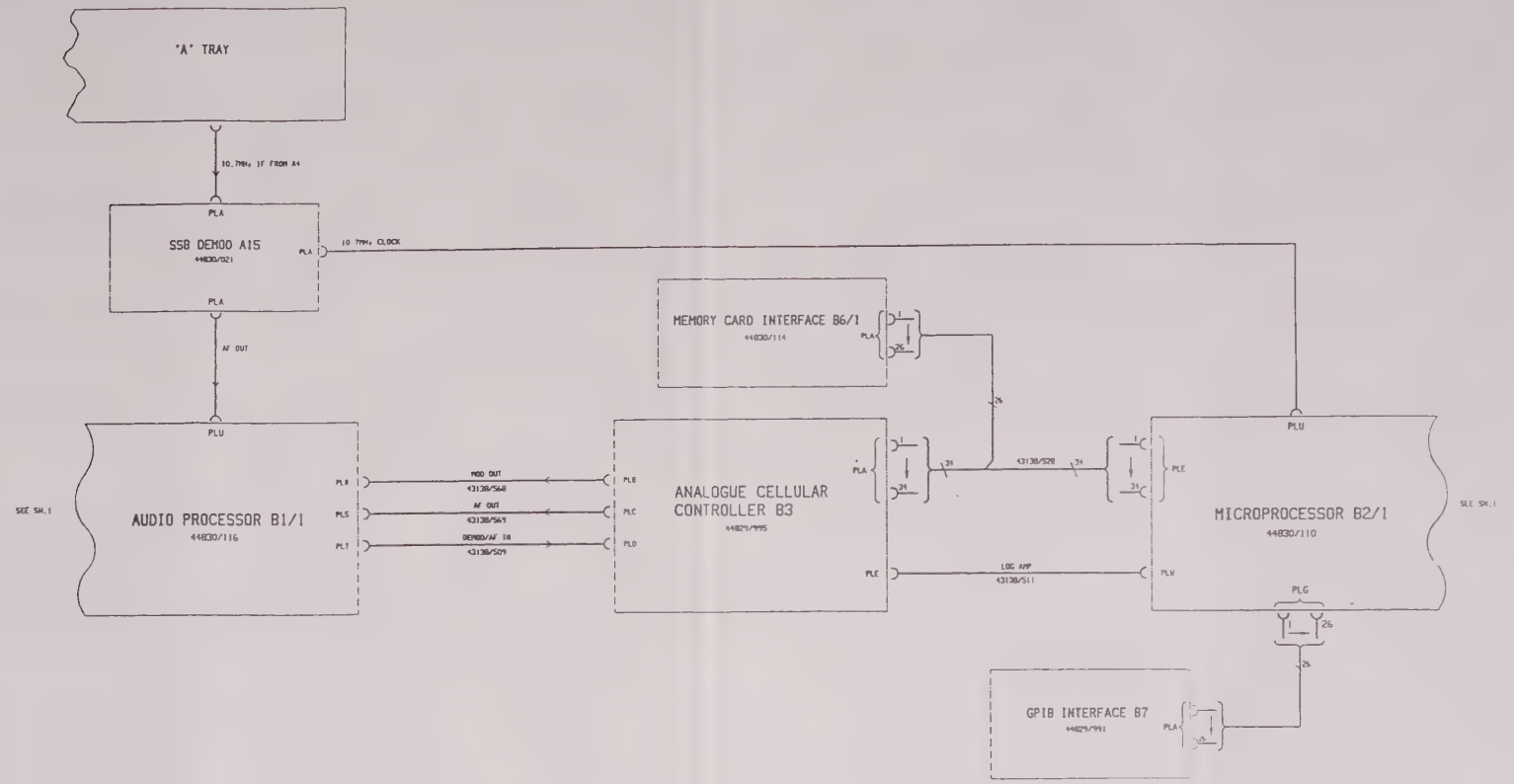

Drg. No. Z44991/200 Sheet 6 of 6

Fig. 7-6 Overall connection diagram (options)

AA1

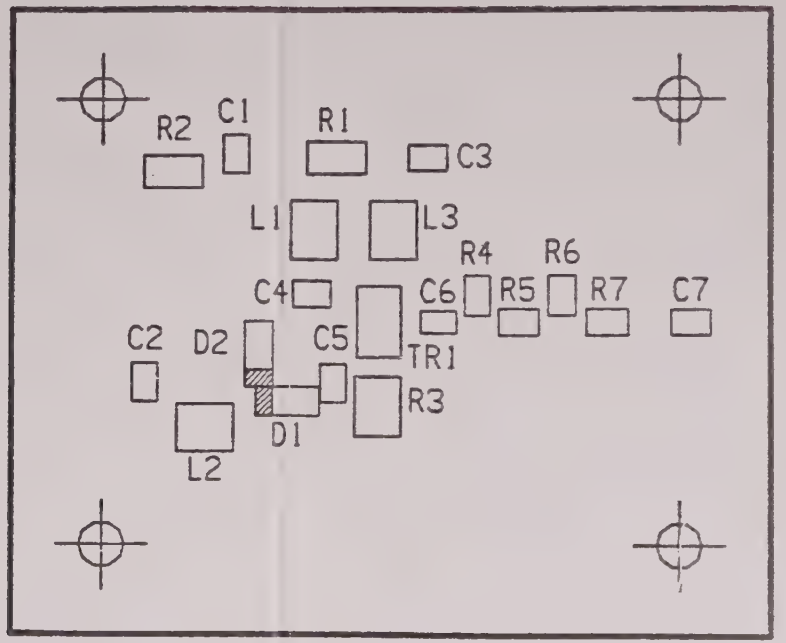

Overall connection diagram (Options)

Drg. No. 44830/160 Sheet 1 of 1

Fig. 7-7 AA1 Component layout for 1.28 GHz - 2.41 GHz oscillator

Circuit diagram AA1

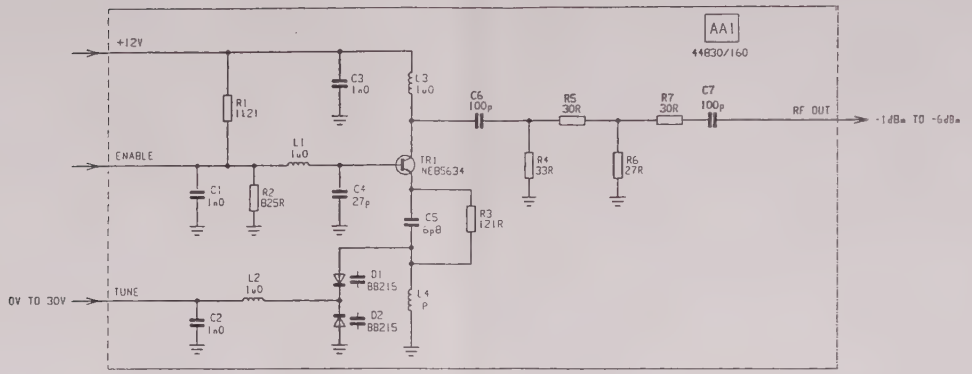

Drg. No. Z44830/160 Sheet 1 of 1

Fig. 7-7 AA1 1.28 GHz - 2.41 GHz oscillator

A2

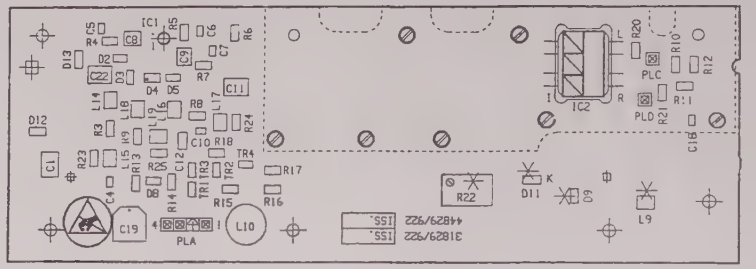

TOP SIDE

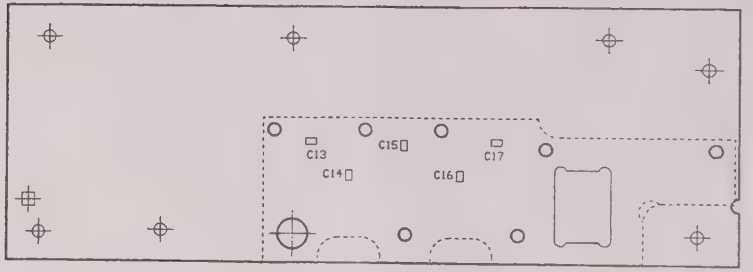

UNDERSIDE

1.28 GHz - 2.41 GHz oscillator **AA1**

Drg. No. E44829/922

Fig. 7-8 A2 Component layout of input mixer

Circuit diagram A2

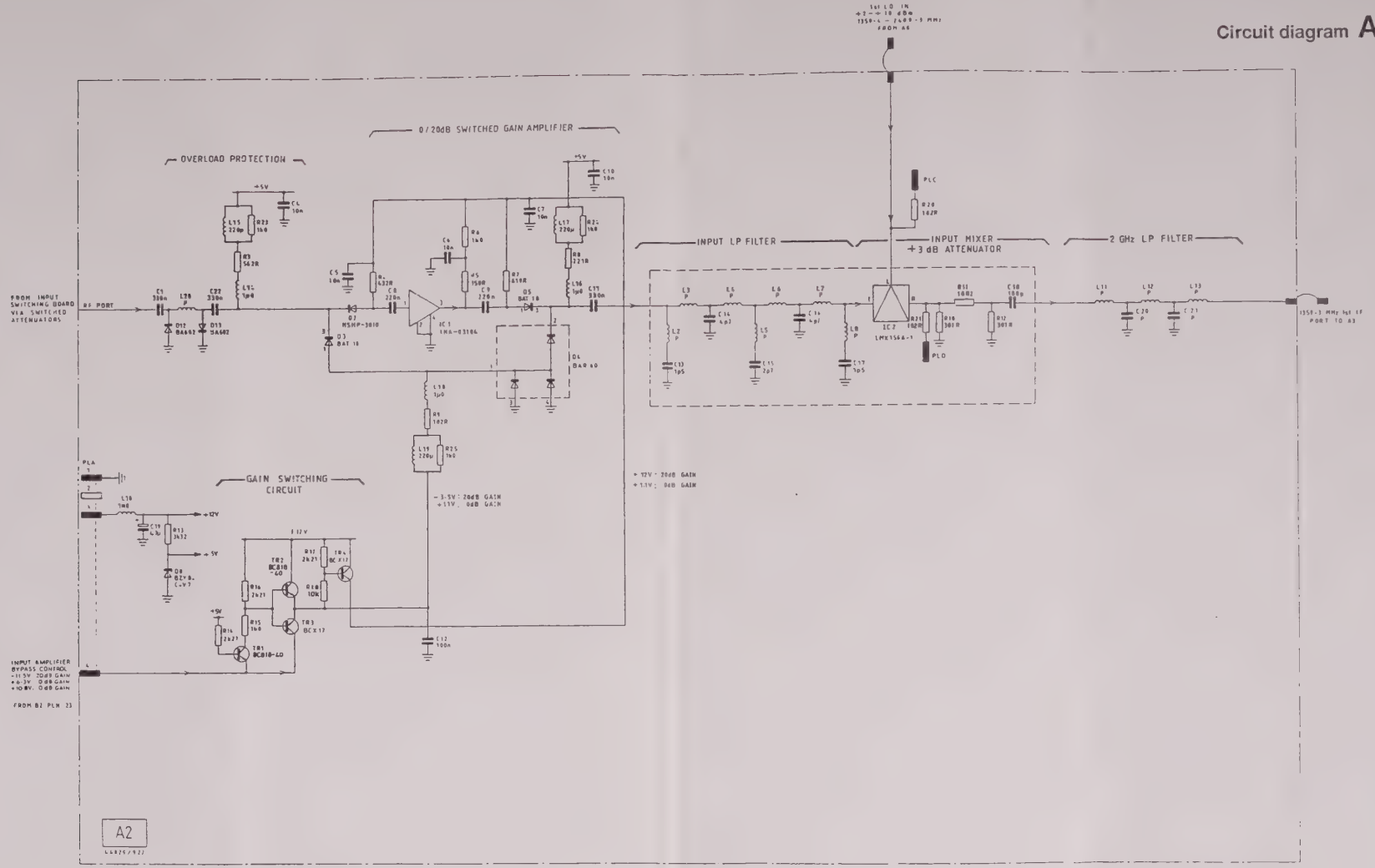

Drg. No. Z44829/922 Sheet 1 of 1

Fig. 7-4 A2 Input mixer

A3

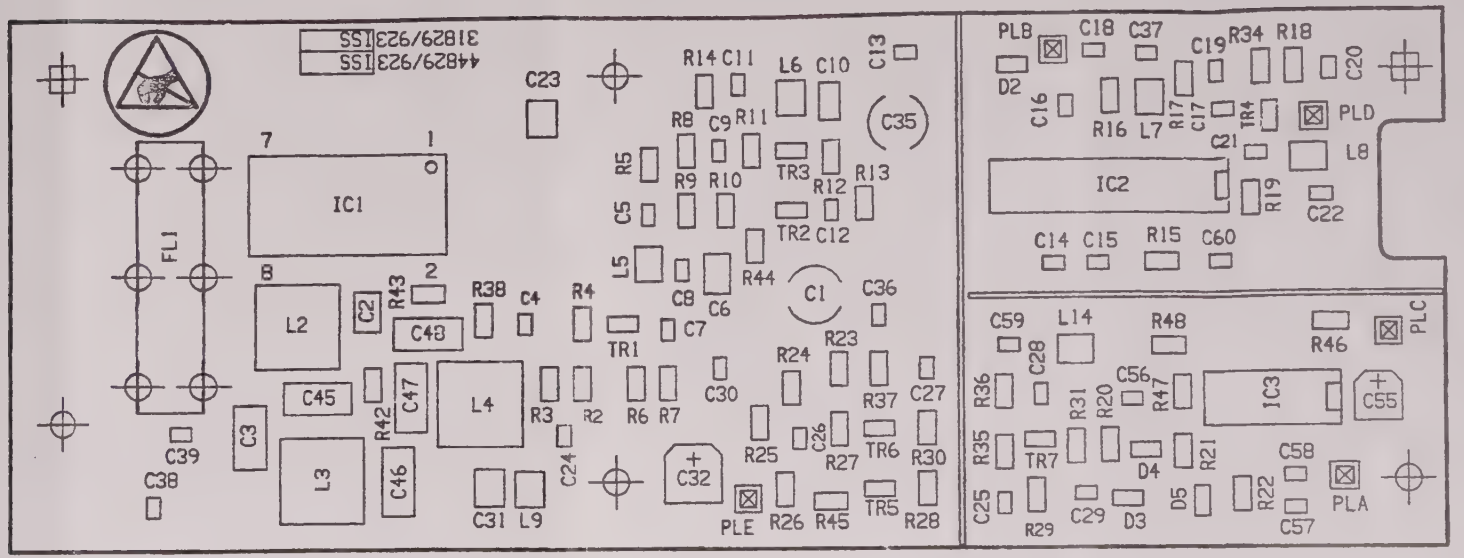

Drg. No. E44829/923

Fig. 7-10 A3 Component layout of 2nd and 3rd mixer

Circuit diagram A3

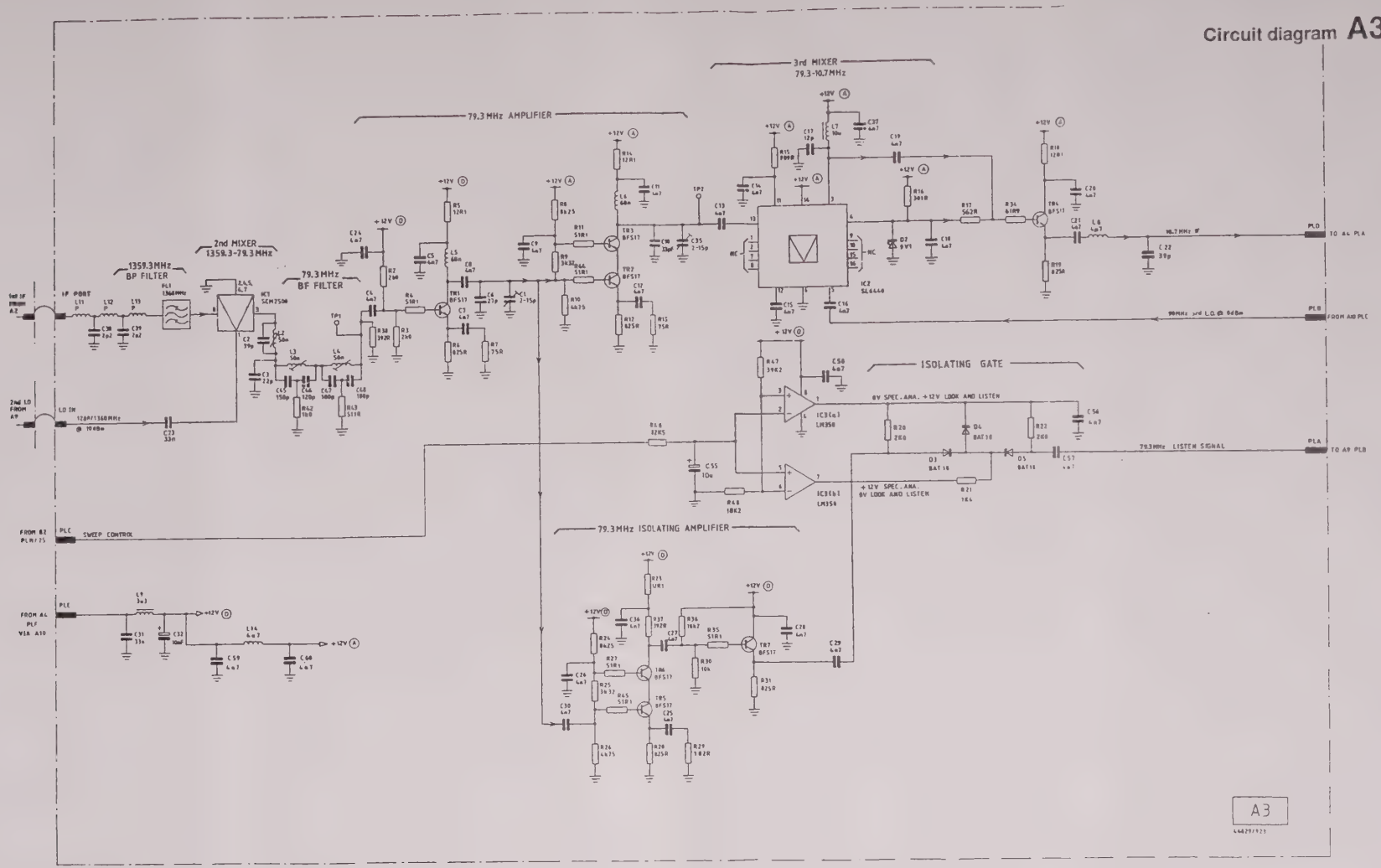

Drg. No. Z44829/923 Sheet 1 of 1

Fig. 7-11 A3 2nd and 3rd mixer

A4/1

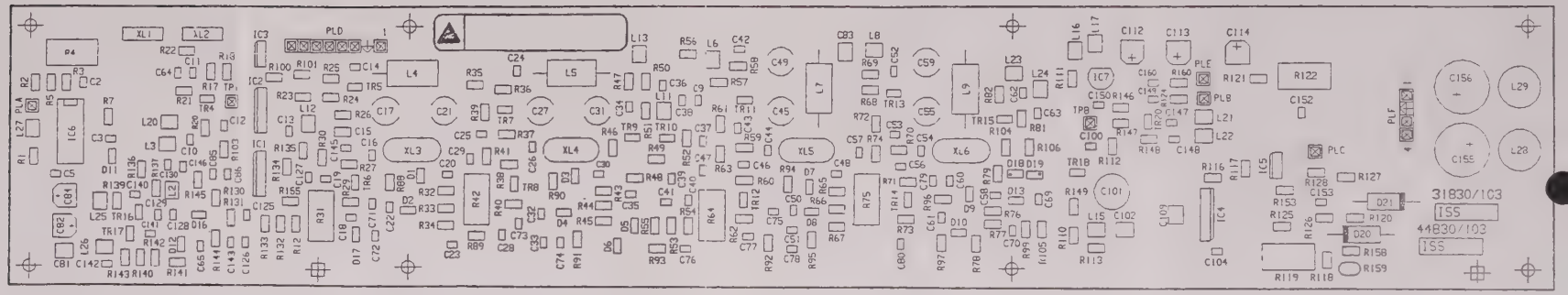

2nd and 3rd mixer A3

Drg. No. E44830/103

Fig. 7-12 A4/1 Component layout of 10.7 MHz If & Log Amp

Circuit diagram A4/1

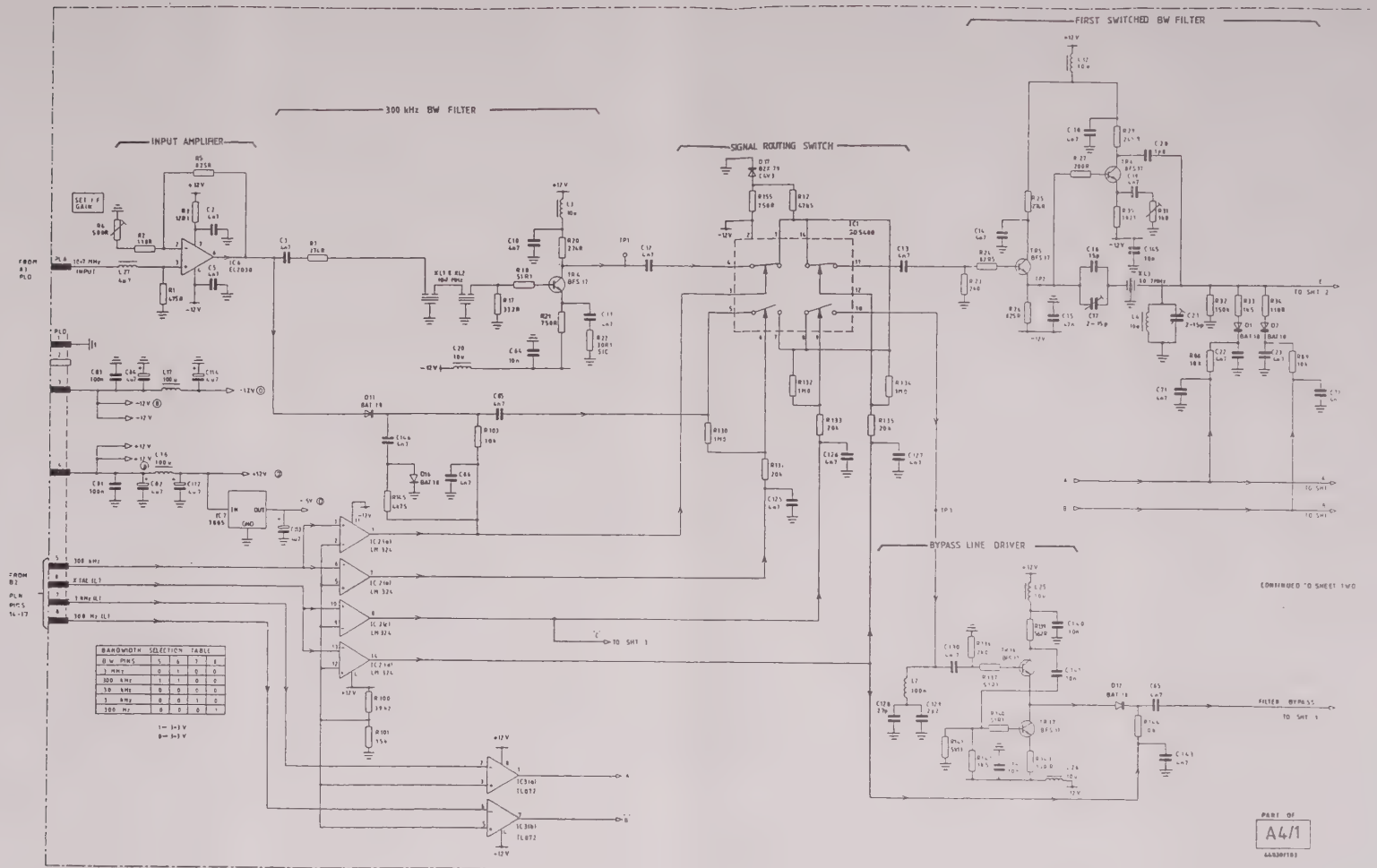

Drg. No. Z44830/103 Sheet 1 of 3

Fig. 7-13 A4/1 10.7 MHz IF & Log Amp

10.7 MHz IF & Log Amp A4/1

Circuit diagram A4/1

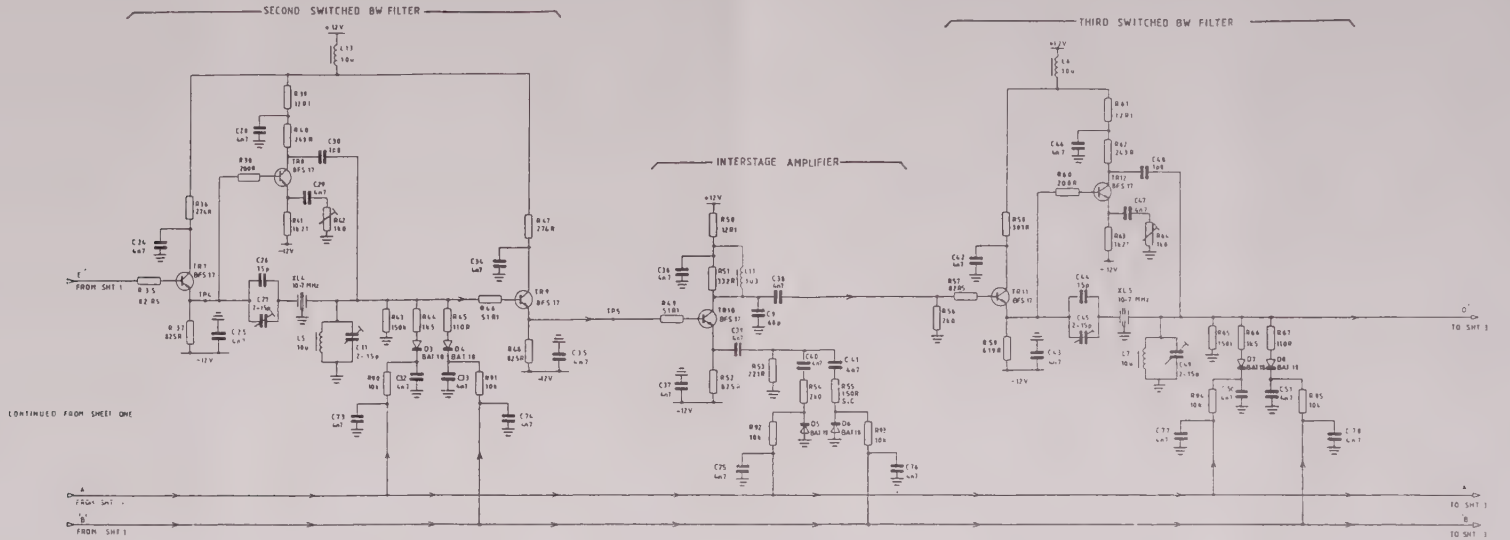

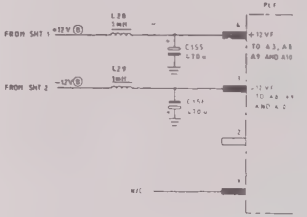

PAGE OF A4/1

Drg. No. Z44830/103 Sheet 2 of 3

Fig. 7-14 A4/1 10.7MHz IF & Log Amp

10.7 MHz IF & Log Amp A4/1

Circuit diagram A4/1

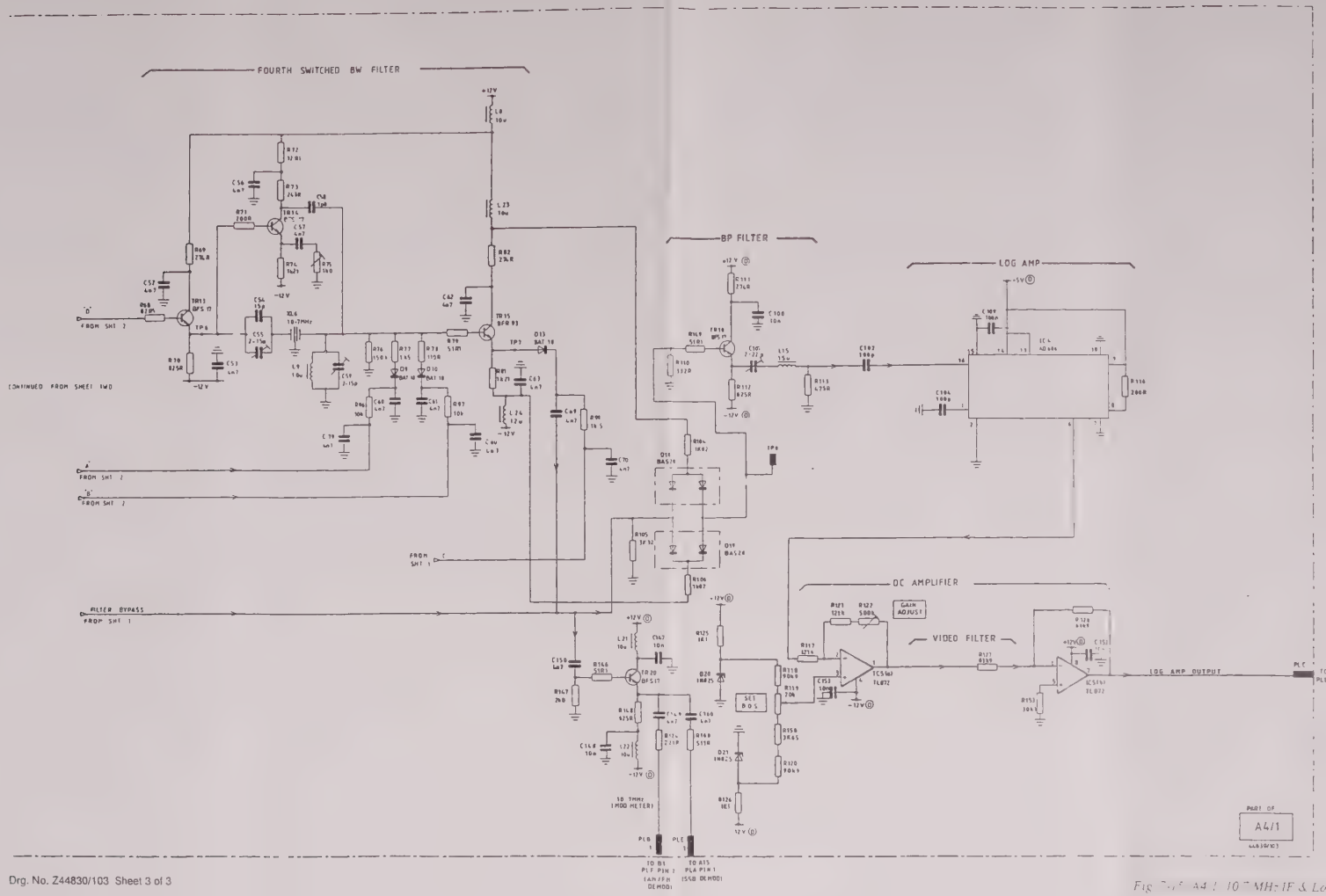

Drg. No. Z44830/103 Sheet 3 of 3

Fig. [illegible] A4/1 10.7MHz IF & Log Amp

A6/1

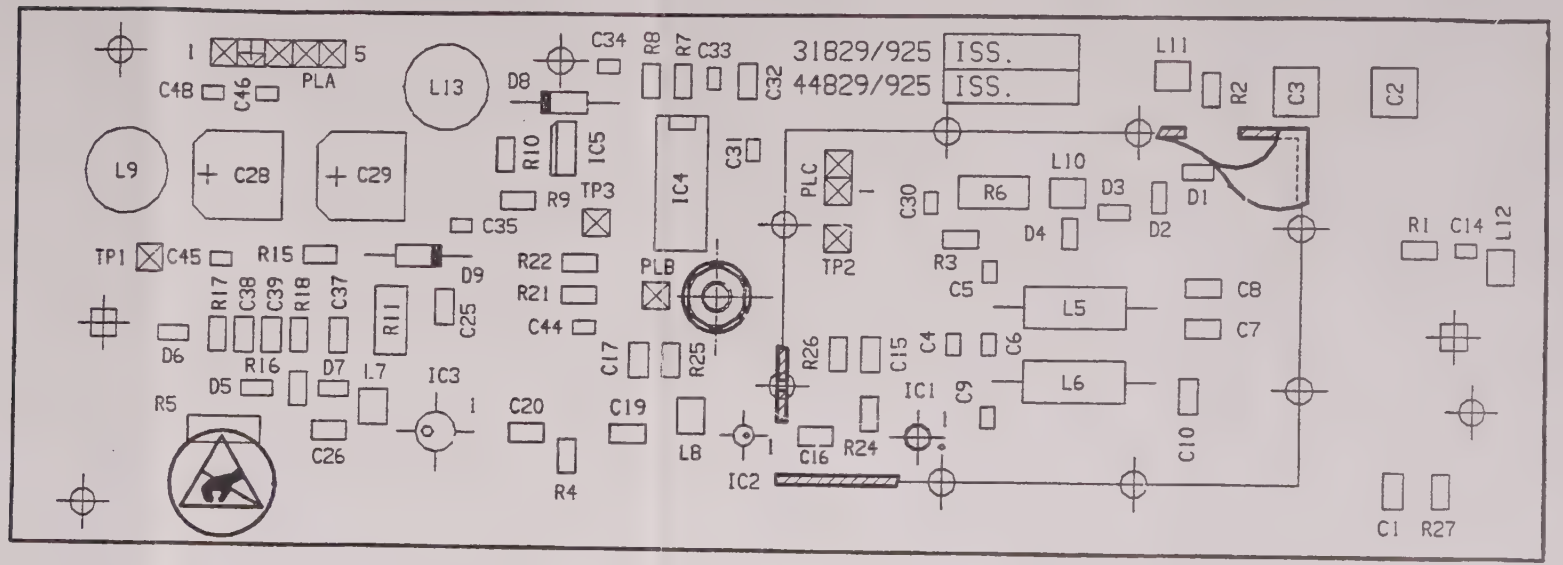

10.7 MHz IF & Log Amp A4/1

Drg. No. E44829/925

Fig. 7-16 A6/1 Component layout of output amplifier

Circuit diagram A6/1

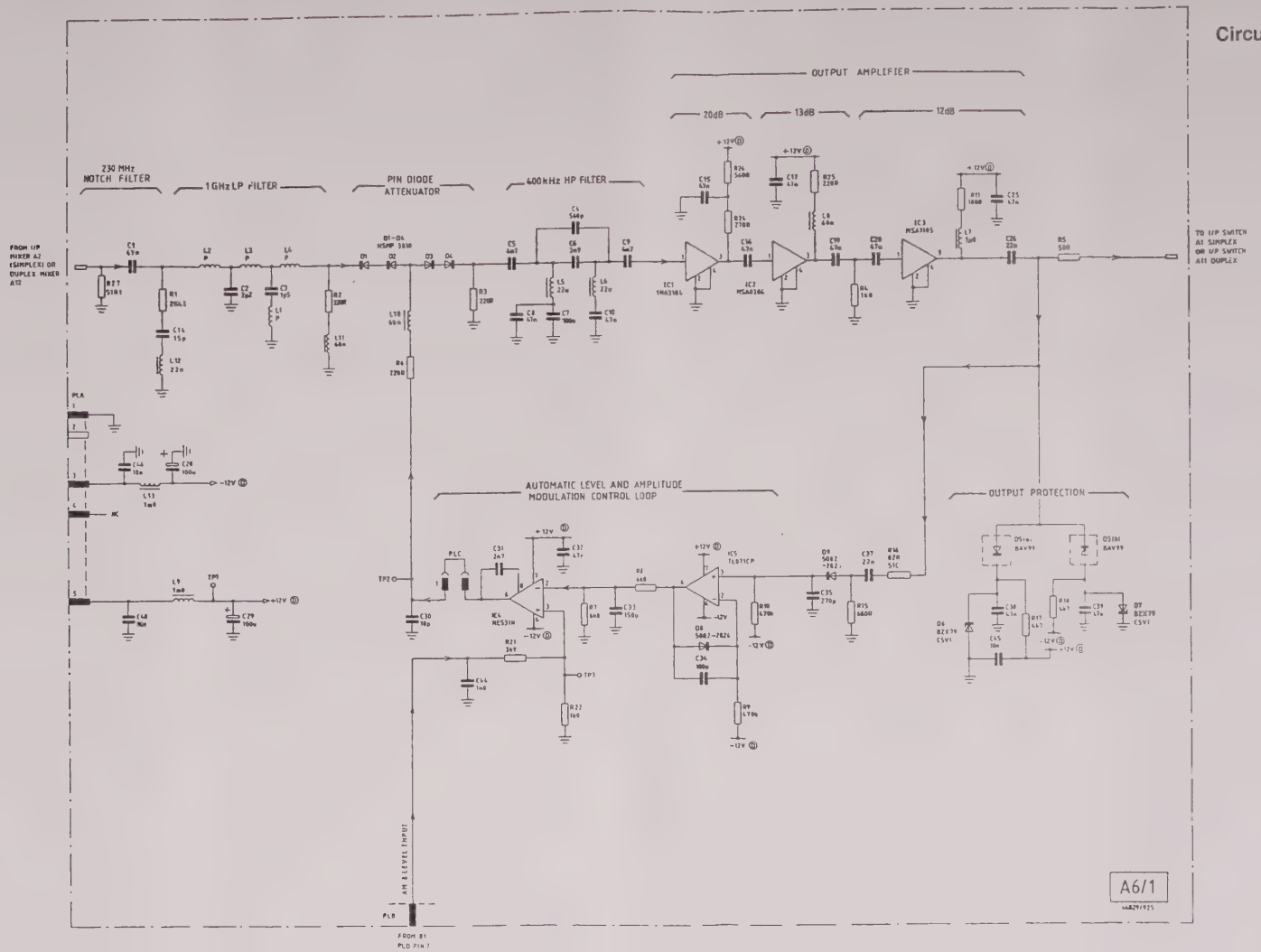

Drg. No. Z44829/925 Sheet 1 of 1

Fig. 7-17 A6/1 Output amplifier

A7/1

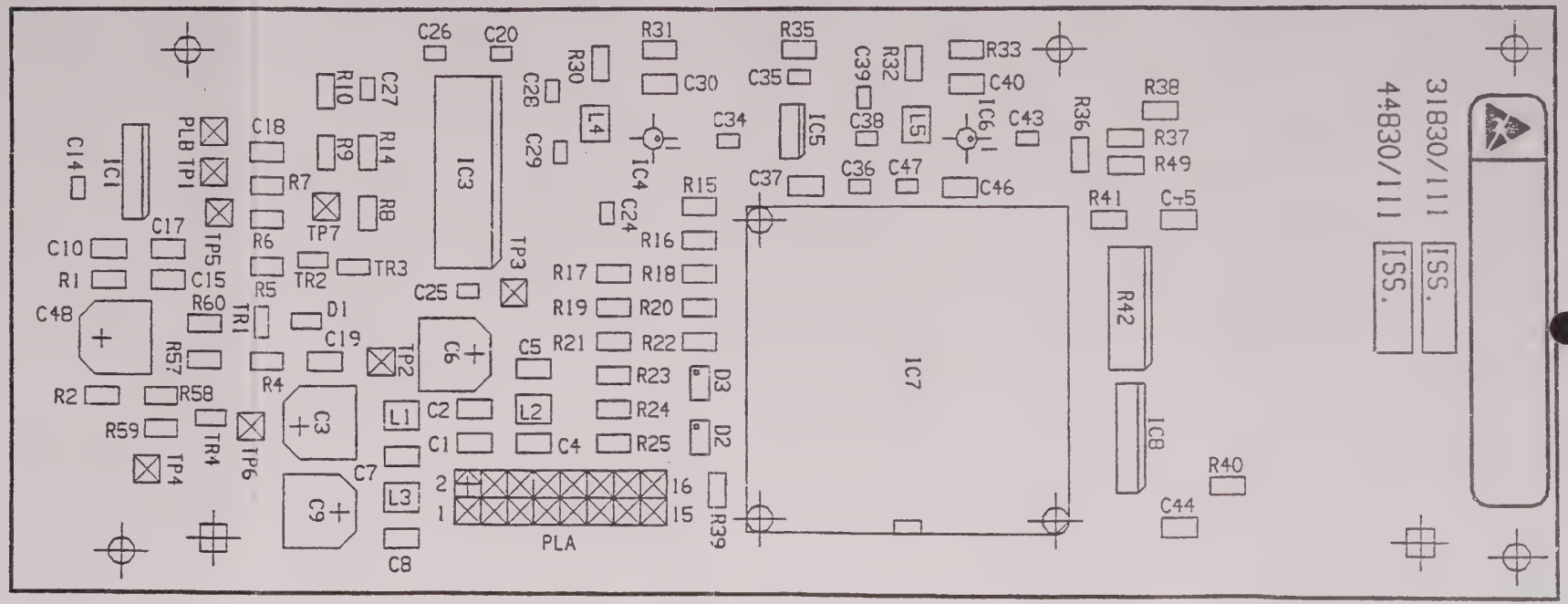

Output amplifier A6/1

Drg. No. E44830/111

Fig. 7-18 A7/1 Component layout of 1st local oscillator control

Circuit diagram A7/1

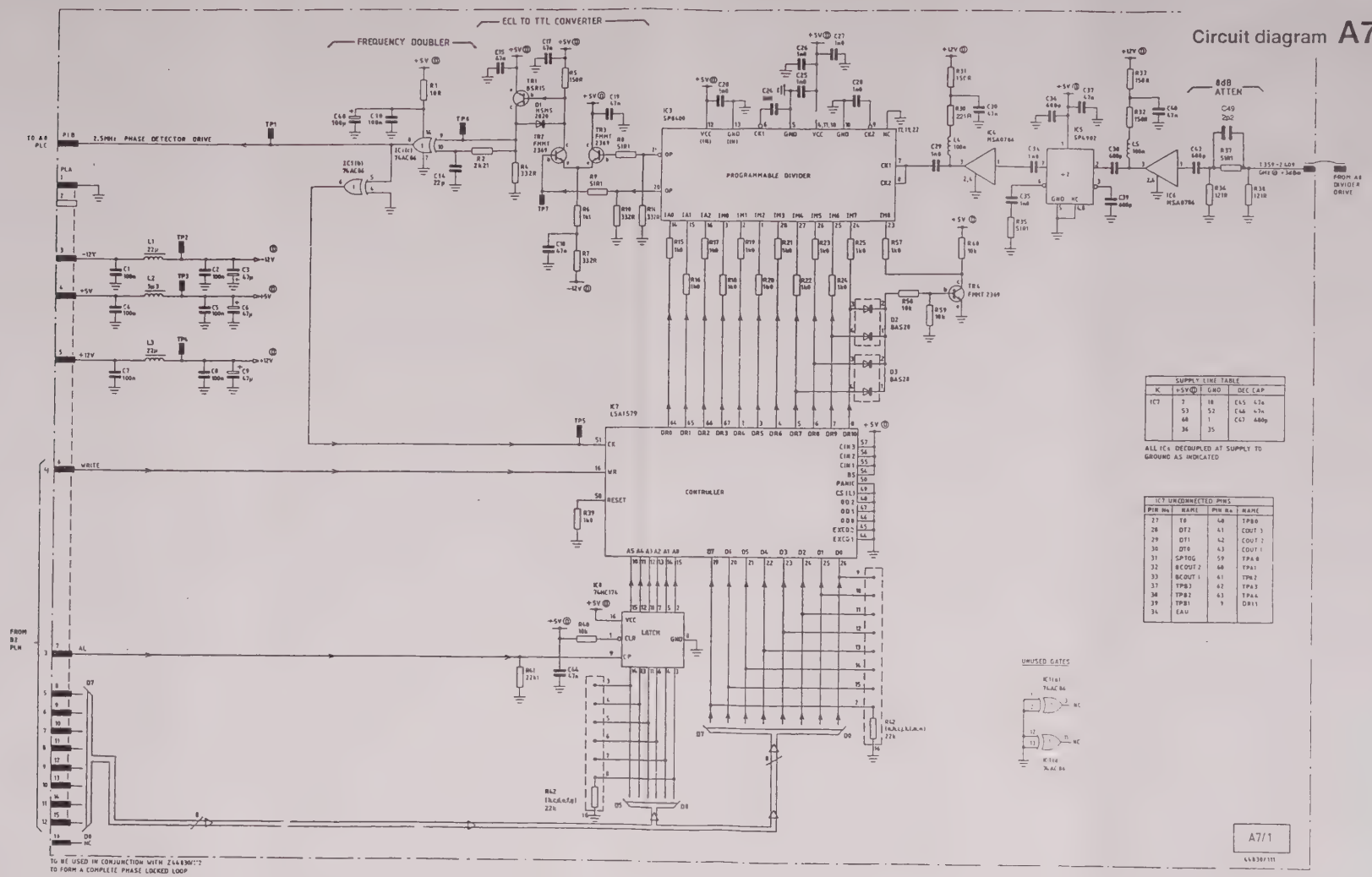

Drg. No. Z44830/111 Sheet 1 of 1

Fig. 7-19 A7/1 1st local oscillator Control

A8/1

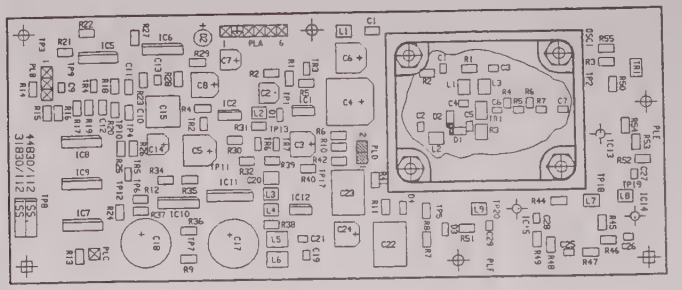

TOP SIDE

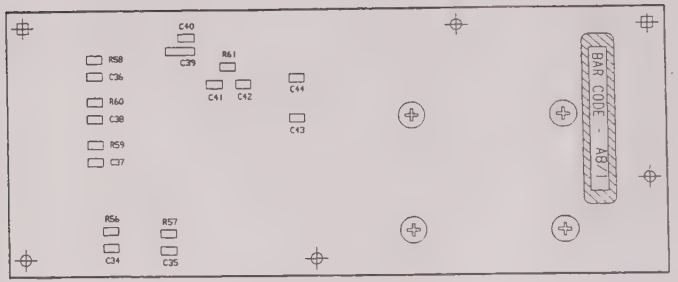

UNDER SIDE

1st local oscillator A7/1

Drg. No. E44830/112

Fig. 7-20 A8/1 Component layout of 1st local oscillator

Circuit diagram A8/1

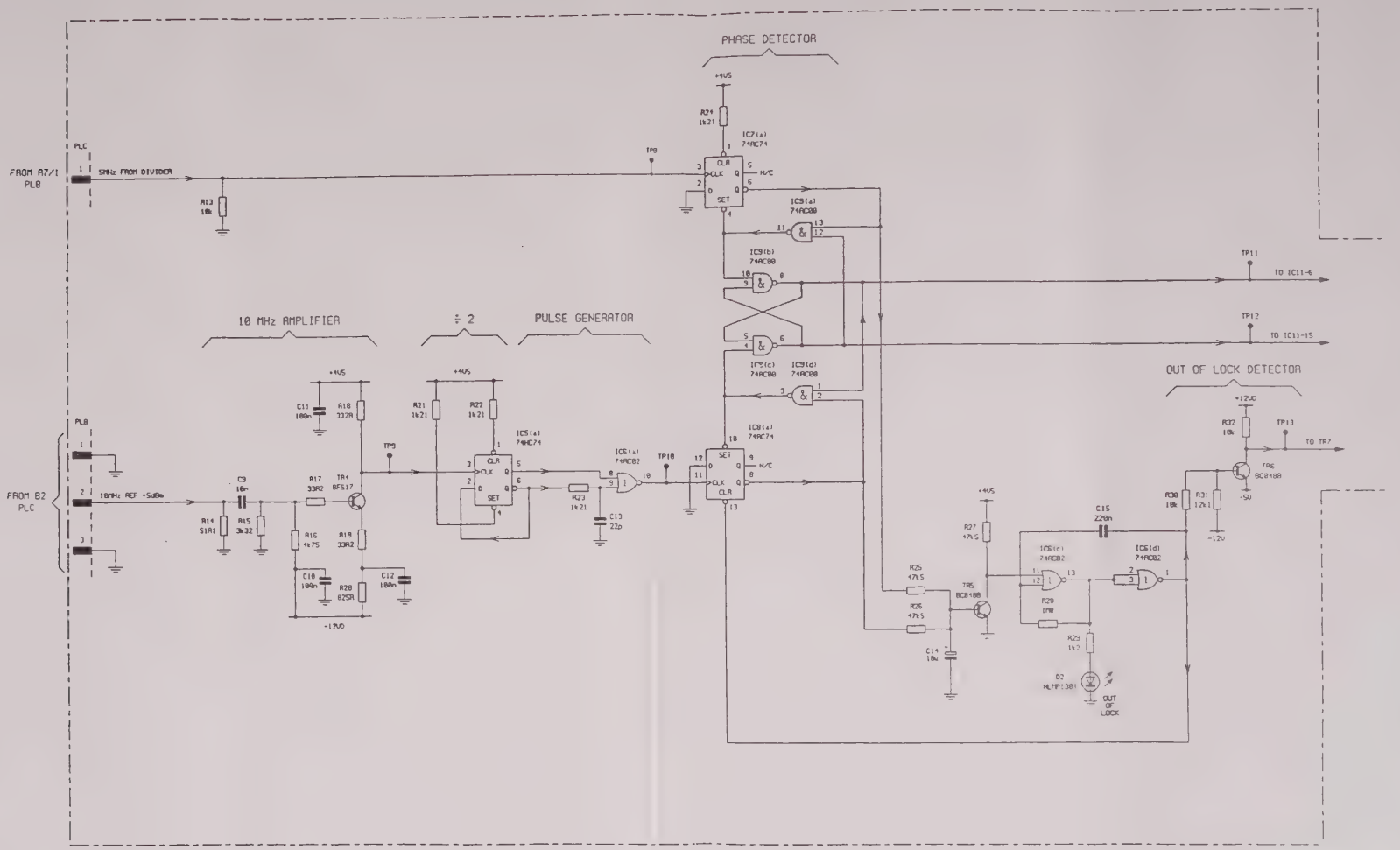

Drg. No. Z44830/112 Sheet 1 of 2

Fig. 7-21 A8/1 1st local oscillator

1st local oscillator A8/1

Circuit diagram A8/1

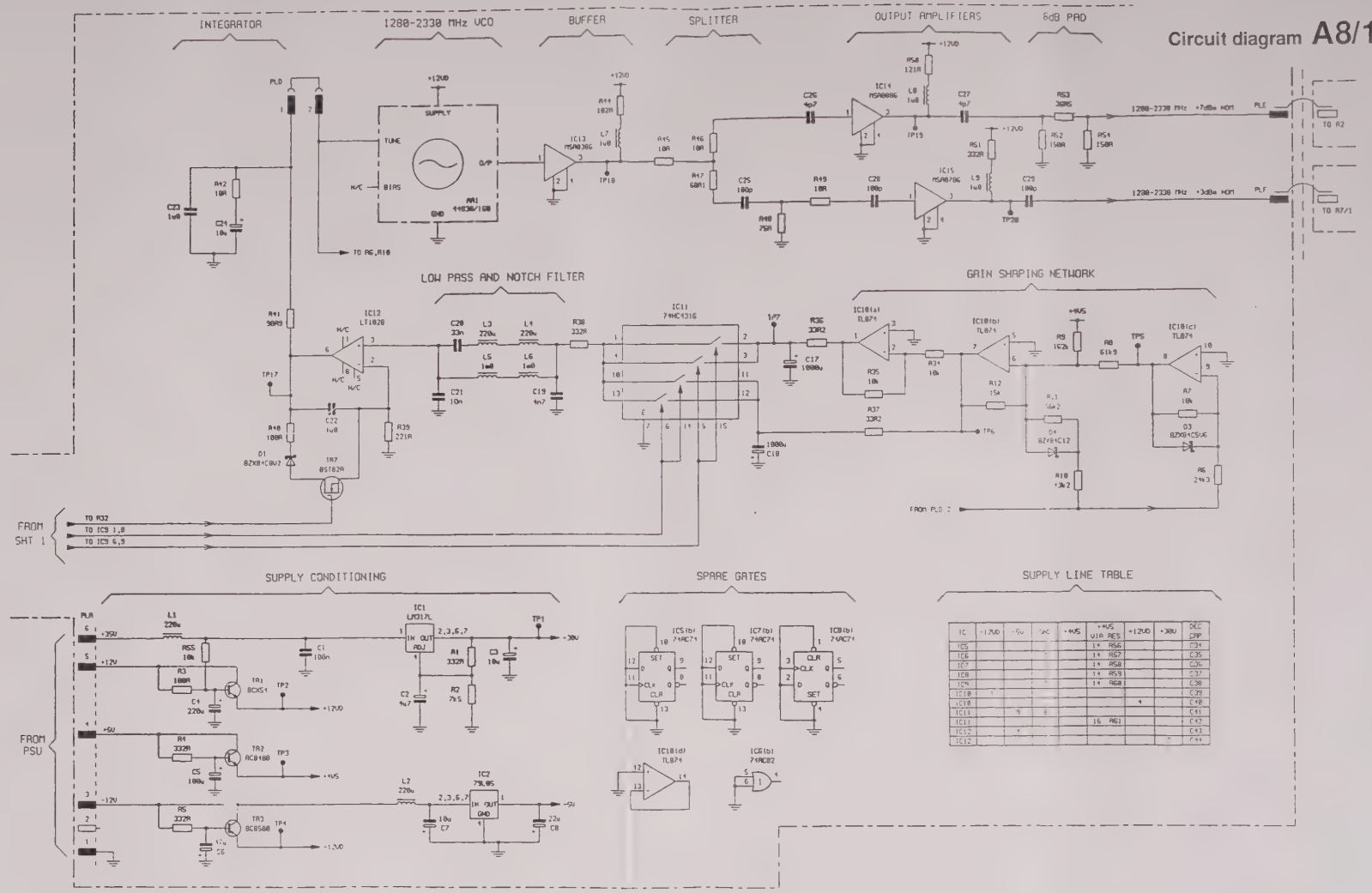

Fig. 7-22 A8/1 1st local oscillator

A9/1

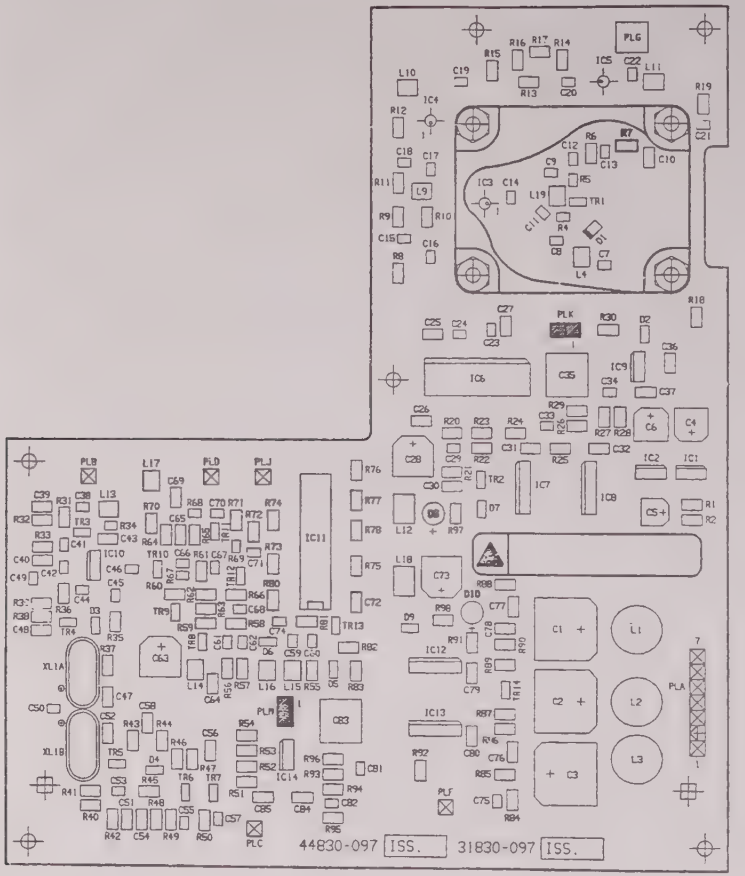

1st local oscillator A8/1

Drg. No. E44830/097

Fig. 7-23 A9/1 Component layout of 2nd and 3rd local oscillator

Circuit diagram A9/1

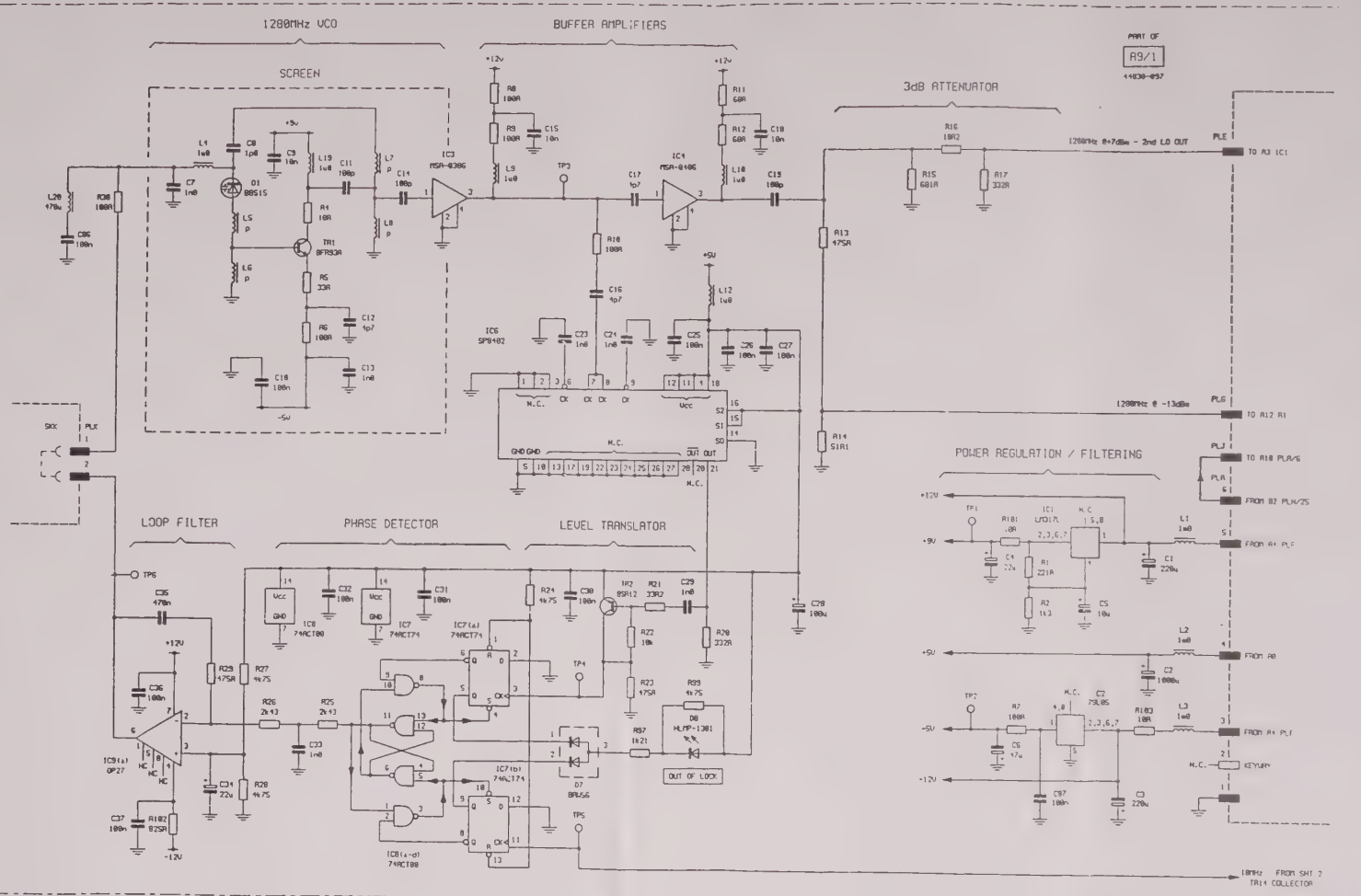

Drg. No. Z44830/097 Sheet 1 of 2

Fig. 7-24 A9/1 2nd and 3rd local oscillator

A9/1

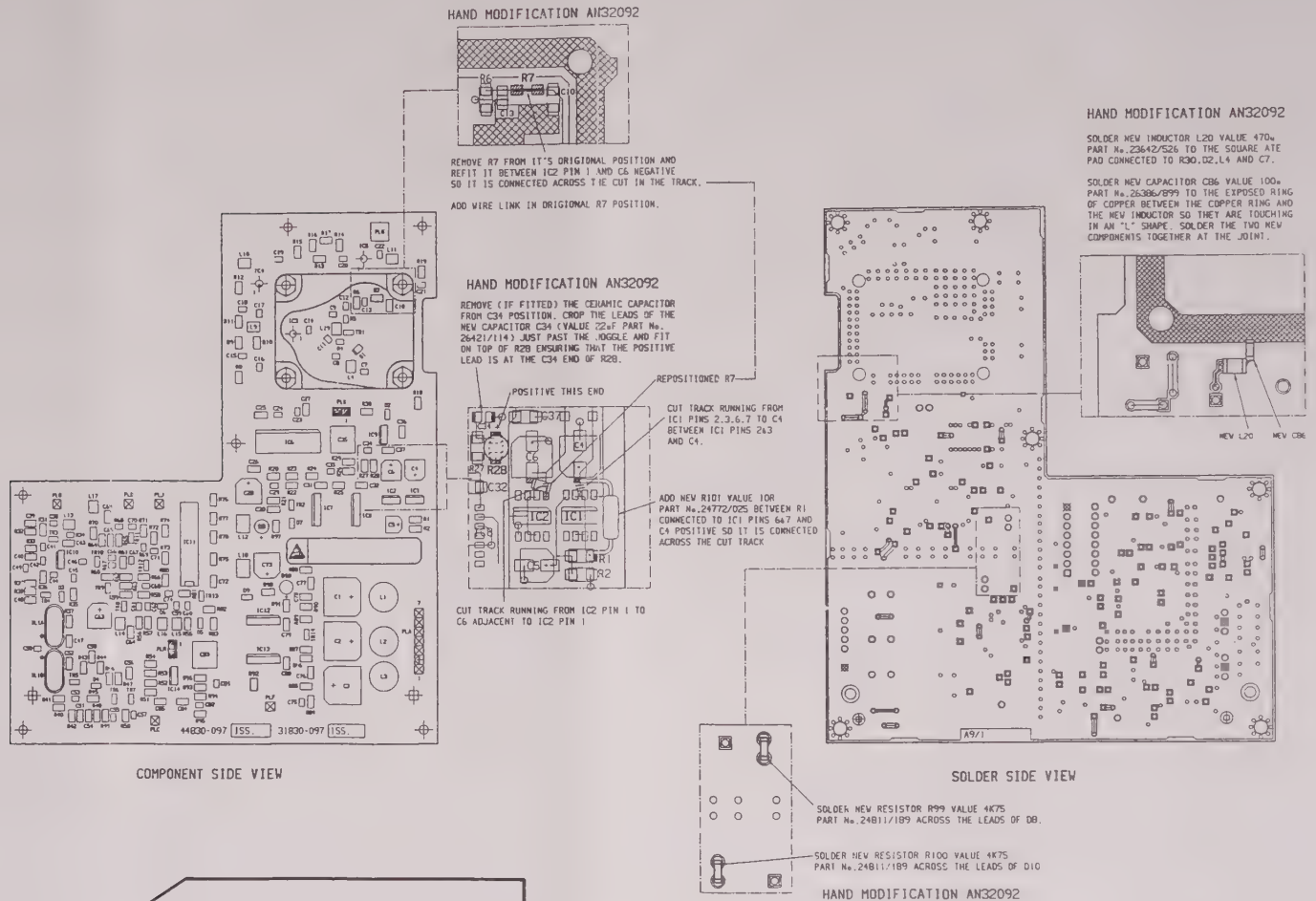

Drg. No. E44830/097

Fig. 7-25 A9/1 Assembly drawing of 2nd and 3rd local oscillator

Circuit diagram A9/1

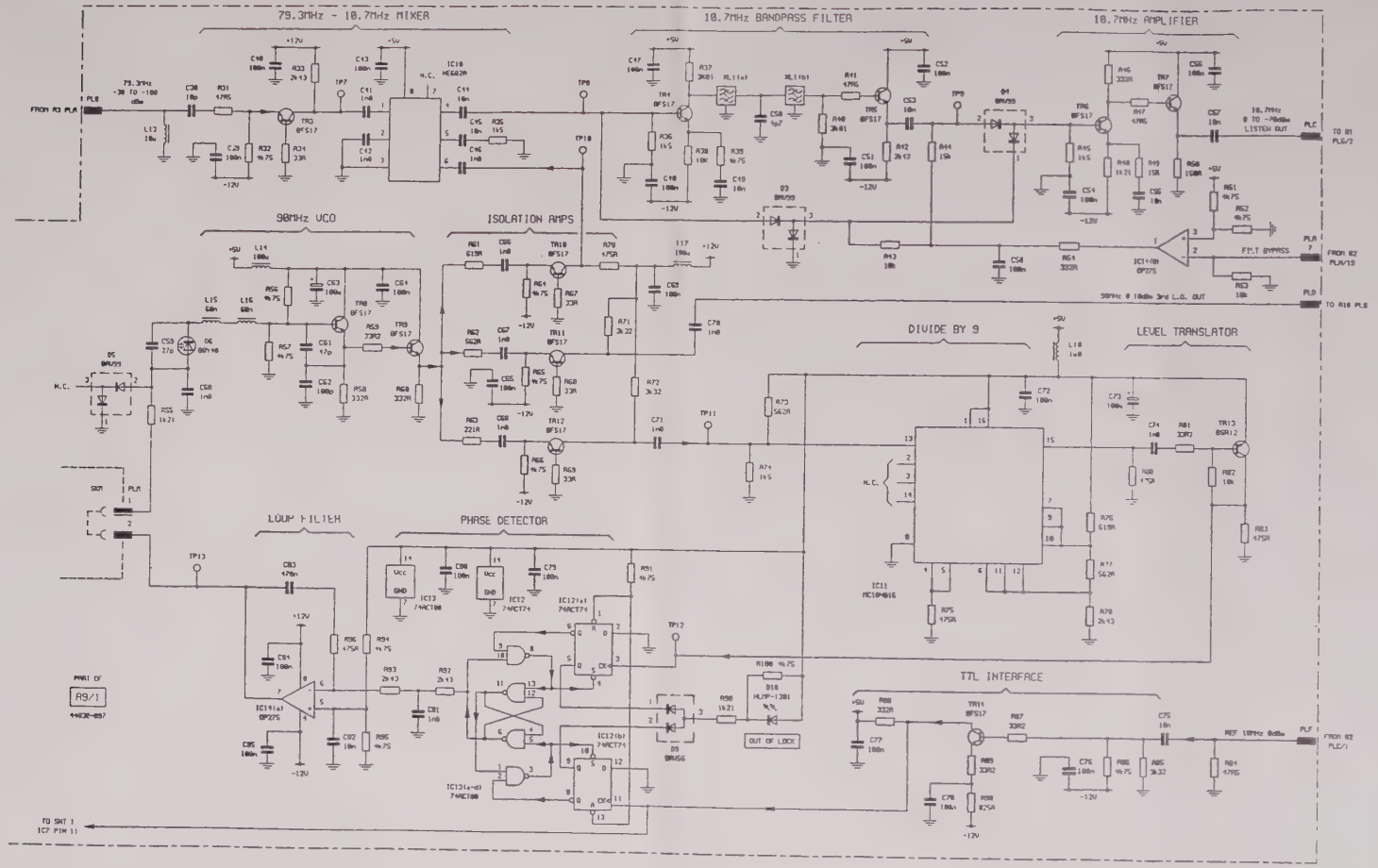

Drg. No. Z44830/097 Sheet 2 of 2

Fig. 7.26 A9/1 2nd and 3rd local oscillator

A10

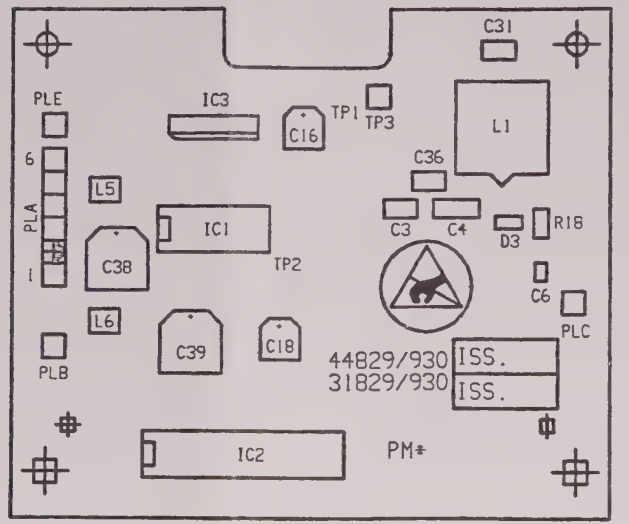

TOP SIDE

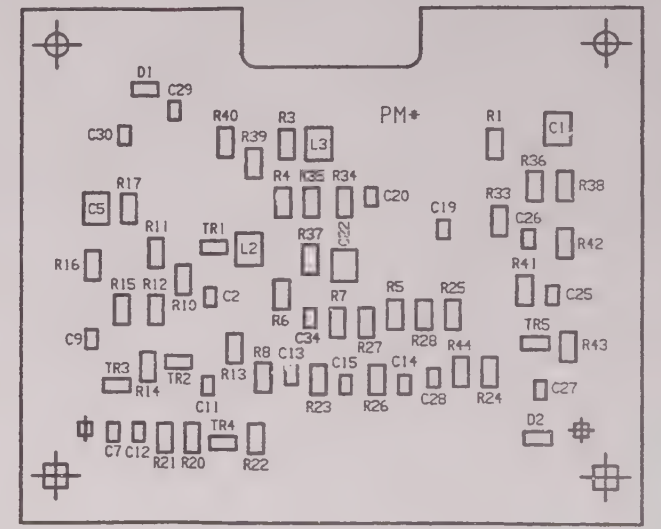

UNDER SIDE

2nd and 3rd local oscillator A9/1

Drg. No. E44829/930

Fig. 7-27 A10 Component layout of 90 MHz swept local oscillator

Circuit diagram A10

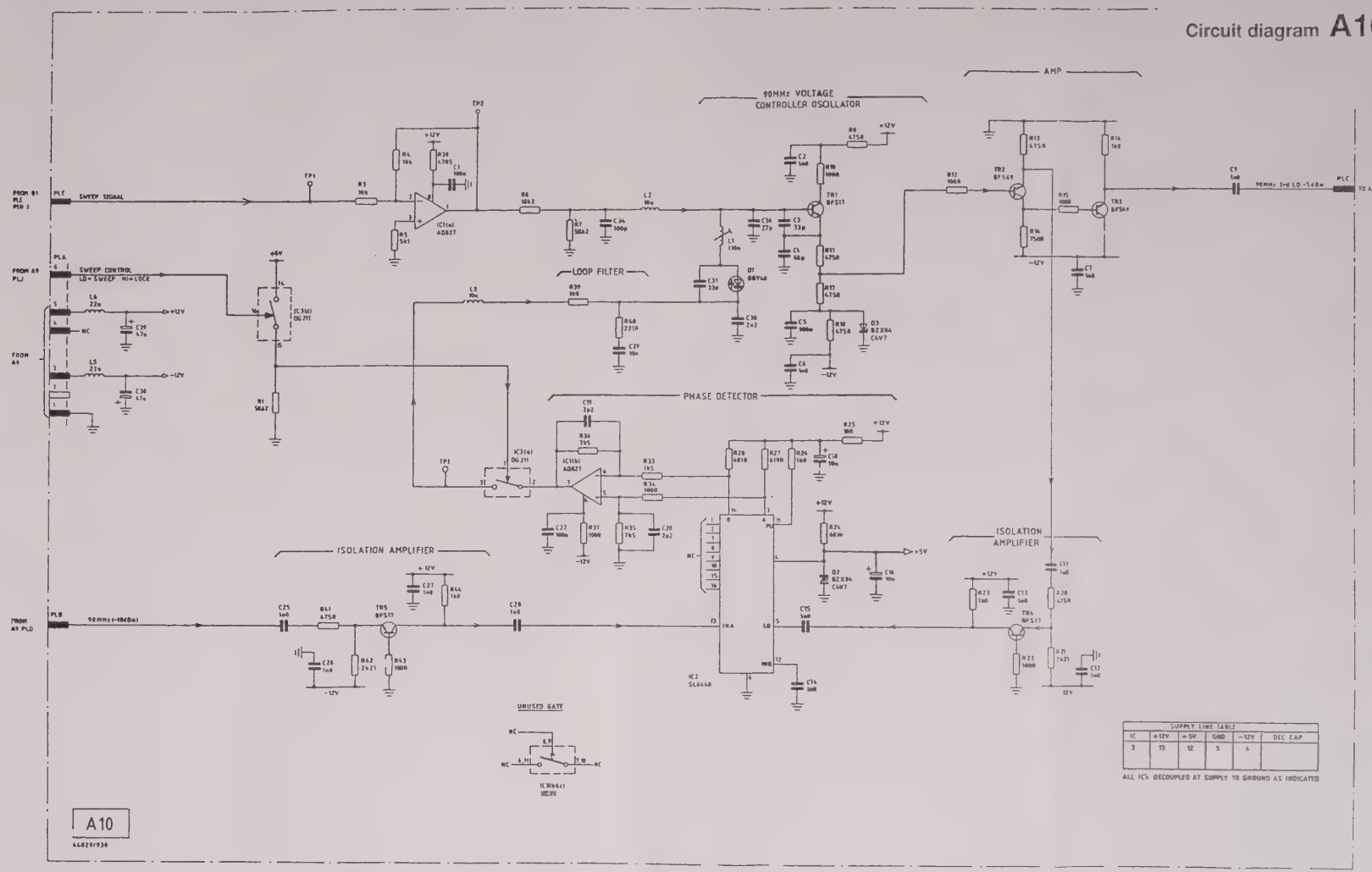

Drg. No. Z44829/930 Sheet 1 of 1

Fig. 7-28 A10 90 MHz swept local oscillator

A11/1

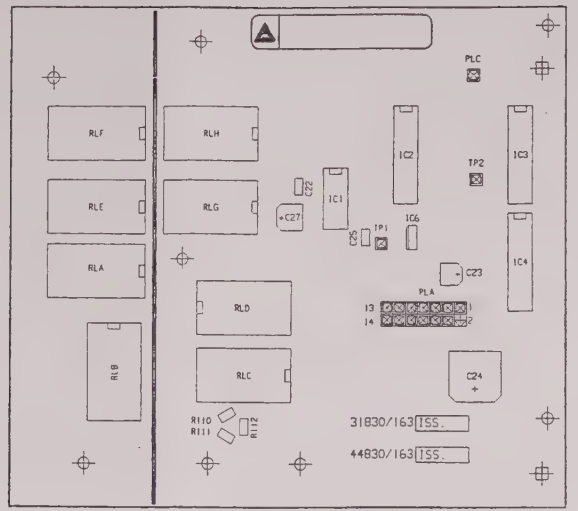

TOP SIDE

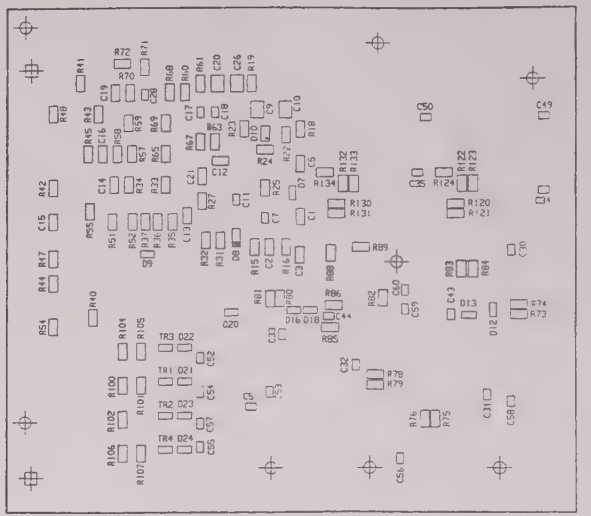

UNDER SIDE

90 MHz swept local oscillator A10

Drg. No. E44830/163

Fig. 7-29 A11/1 Component layout of input switch and power meter

Circuit diagram A11/1

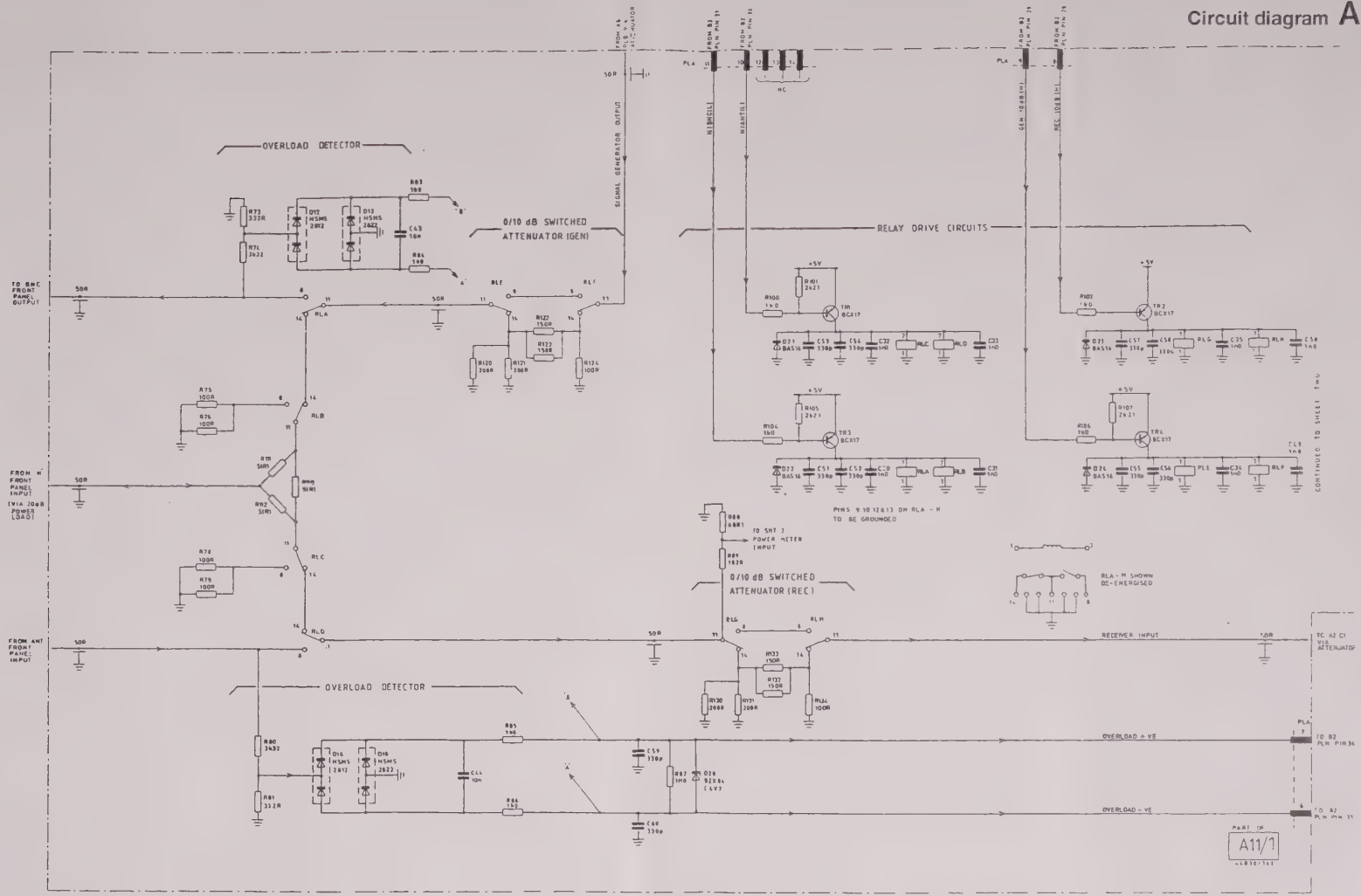

Drg. No. Z44830/163 Sheet 1 of 2

Fig. 7-30 A11/1 Input switch and power meter

Input switch and power meter **A11/1**

Circuit diagram A11/1

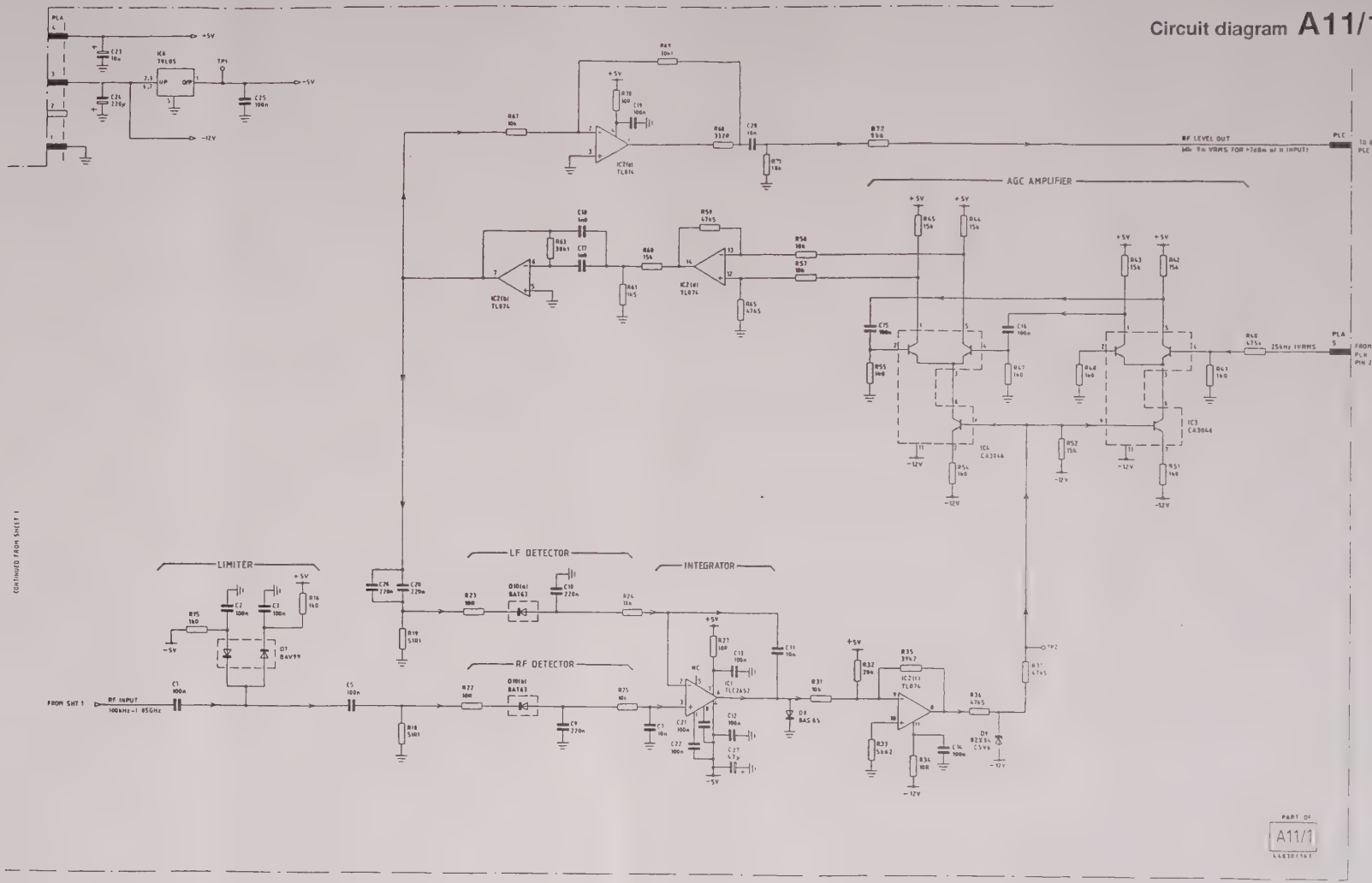

Drg. No. Z44830/163 Sheet 2 of 2

Fig. 7-31 A11/1 Input switch and power meter

A15

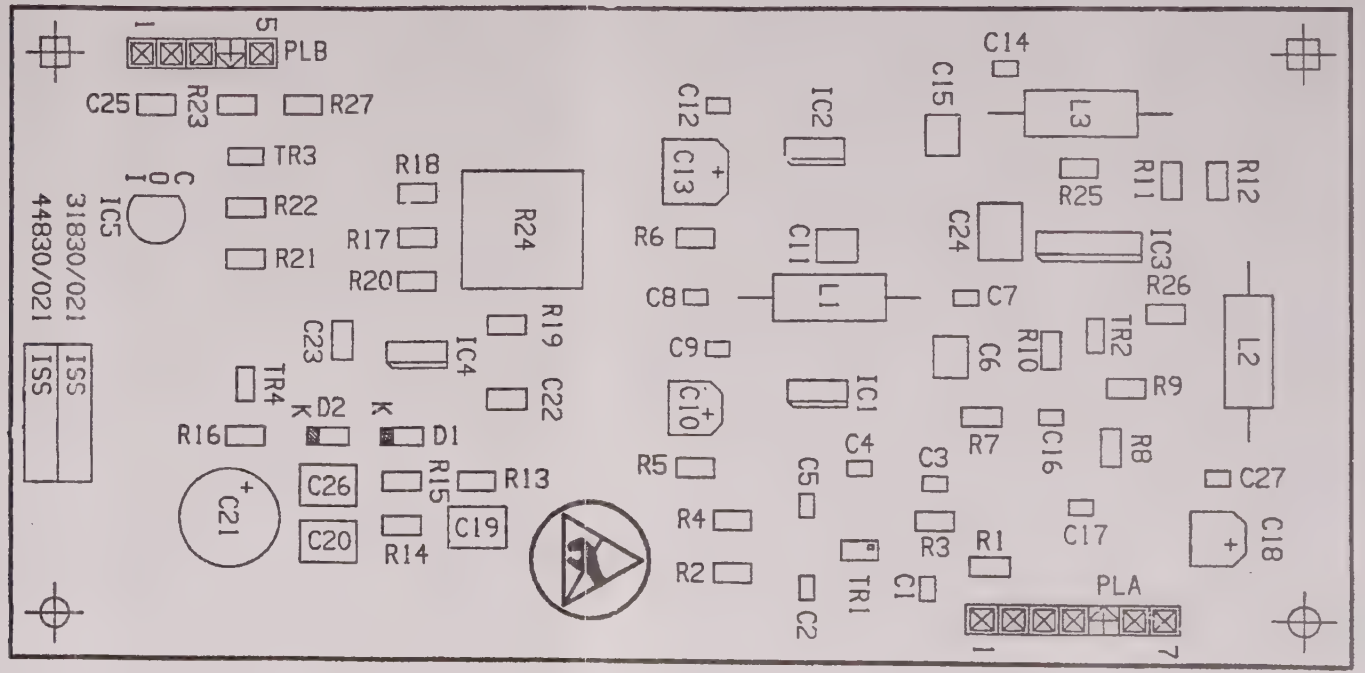

Input switch and power meter **A11/1**

Drg. No. E44830/021

Fig. 7-32 A15 Component layout of SSB board

Circuit diagram A15

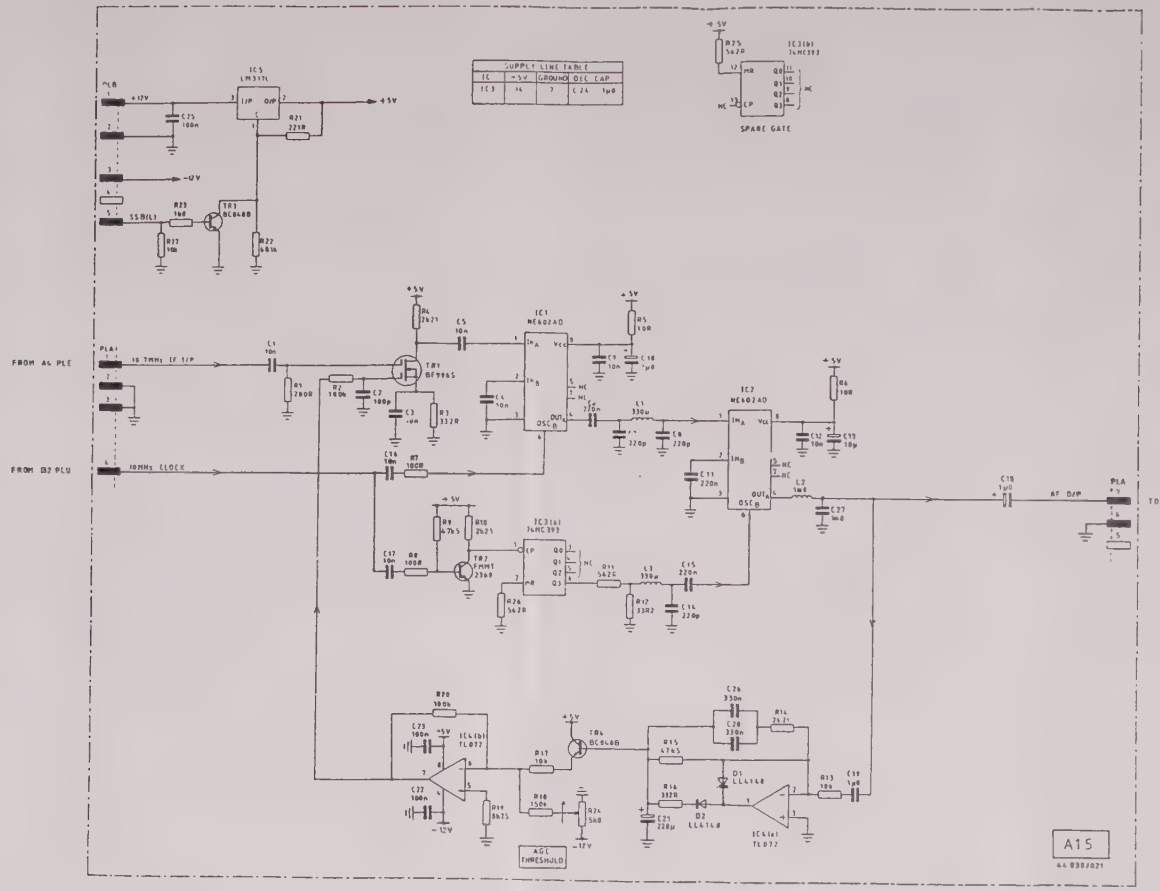

Drg No. Z44830/021 Sheet 1 of 1

Fig 7-33 A15 SSB board

A20

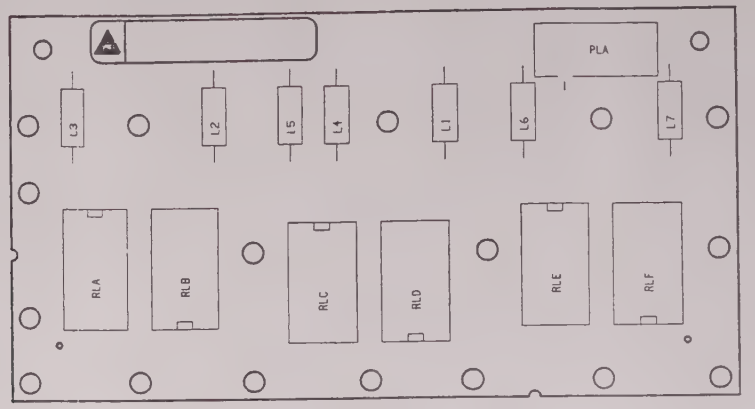

TOP SIDE

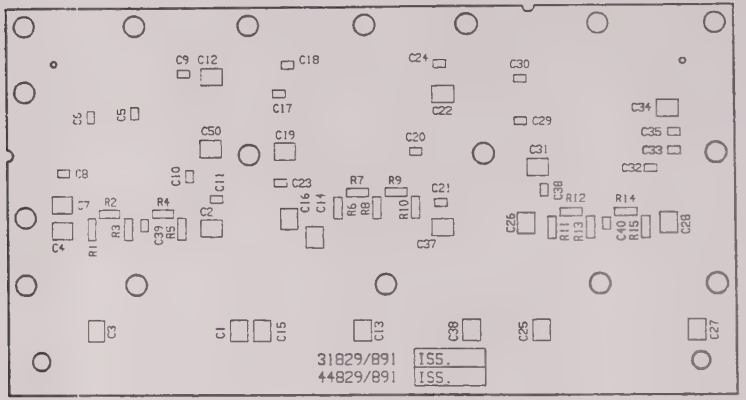

UNDER SIDE

SSB board **A15**

Drg. No. E44829/891

Fig. 7-34 A20 Component layout of 3 stage attenuator

Circuit diagram A20

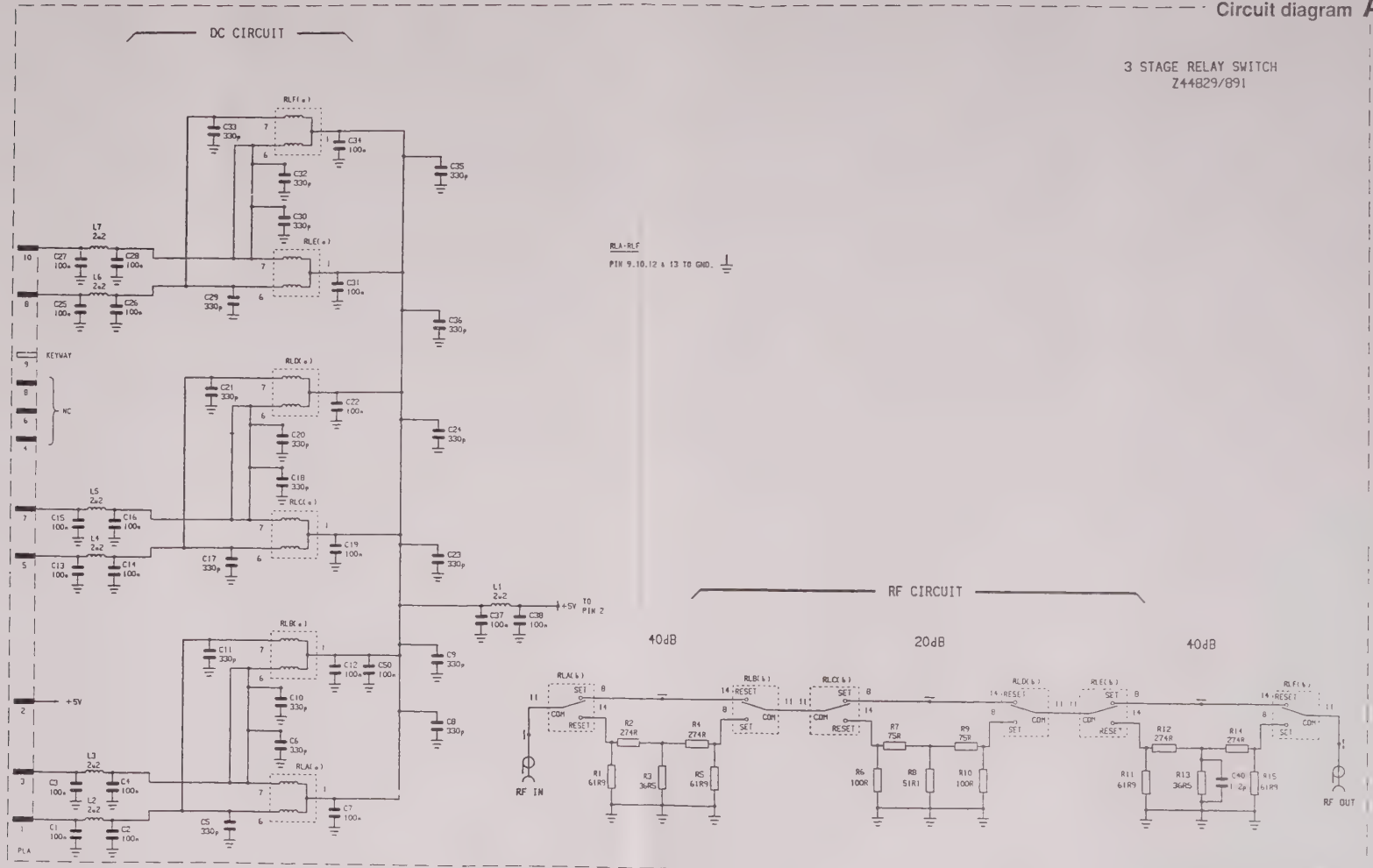

Drg. No. Z44829/891 Sheet 1 of 1

Fig. 7-35 A20 3 stage attenuator

A21

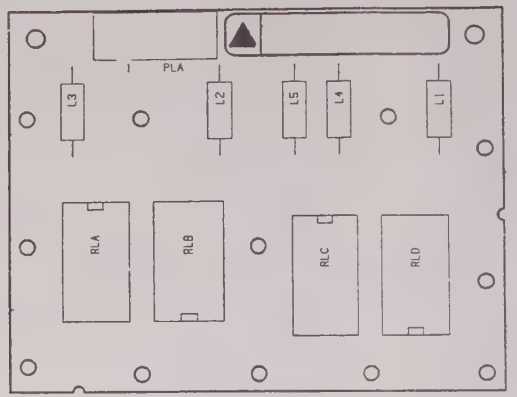

TOP SIDE

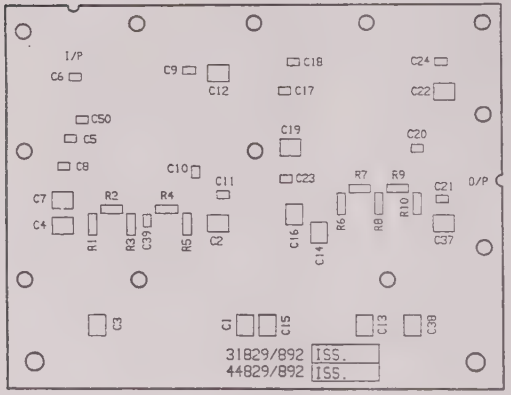

UNDER SIDE

3 stage attenuator A20

Drg. No. E44829/892

Fig. 7-36 A21 Component layout of 2 stage attenuator

Circuit diagram A21

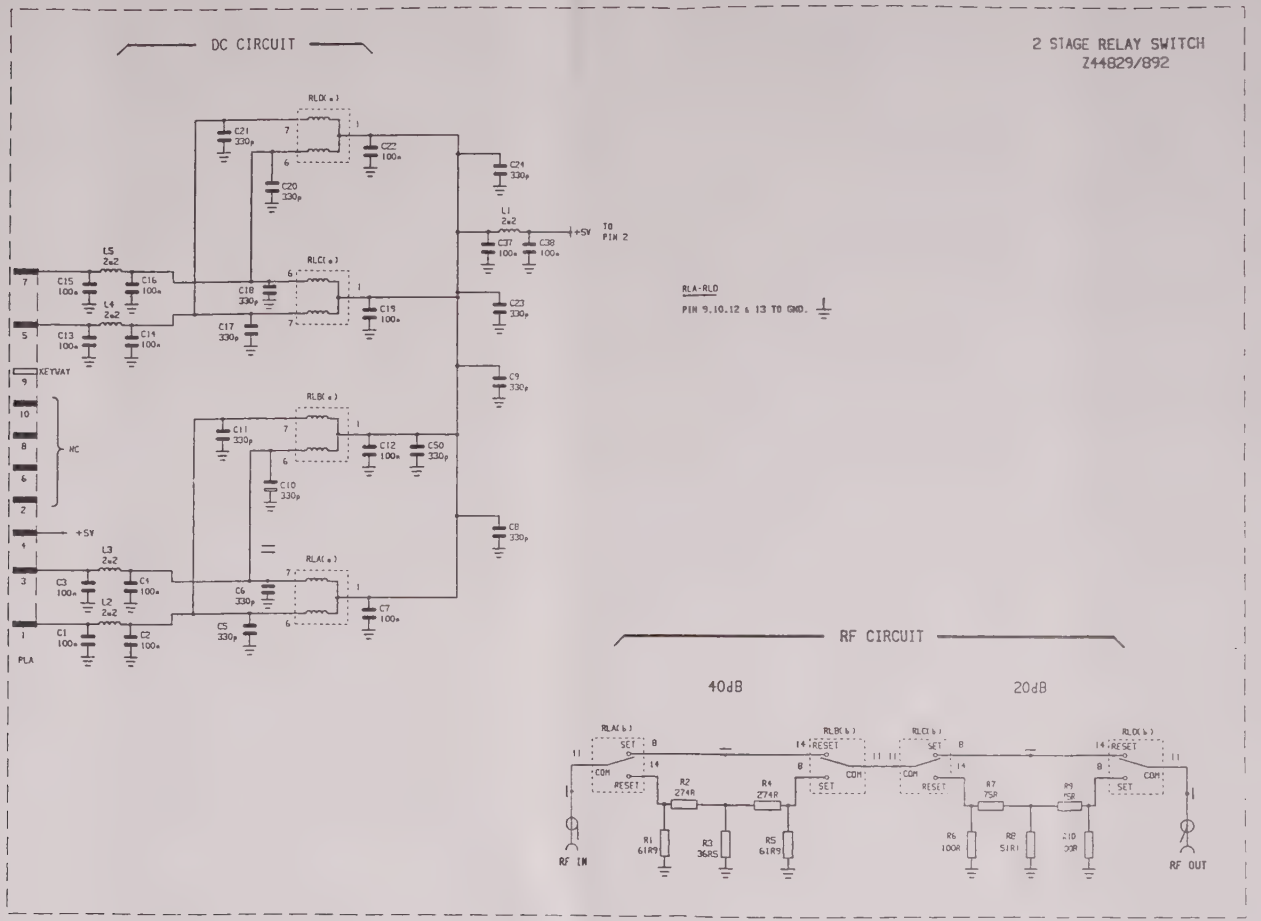

Drg. No. Z44829/892 Sheet 1 of 1

Fig. 7-37 A21 2 stage attenuator

AF3

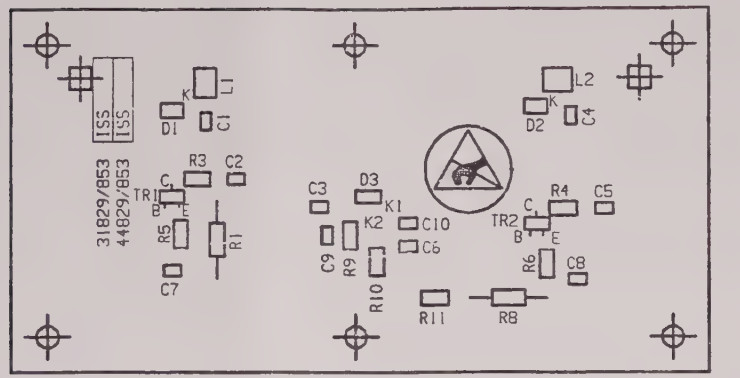

TOP SIDE

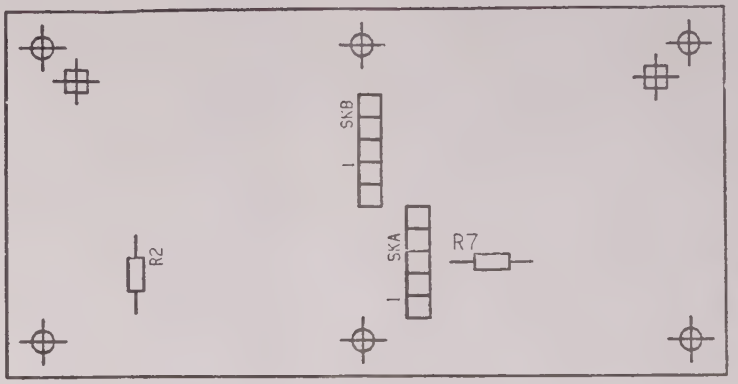

UNDER SIDE

2 stage attenuator **A21**

Drg. No. E44829/853

Fig. 7-38 AF3 Component layout of Voltage controlled oscillator

Circuit diagram AF3

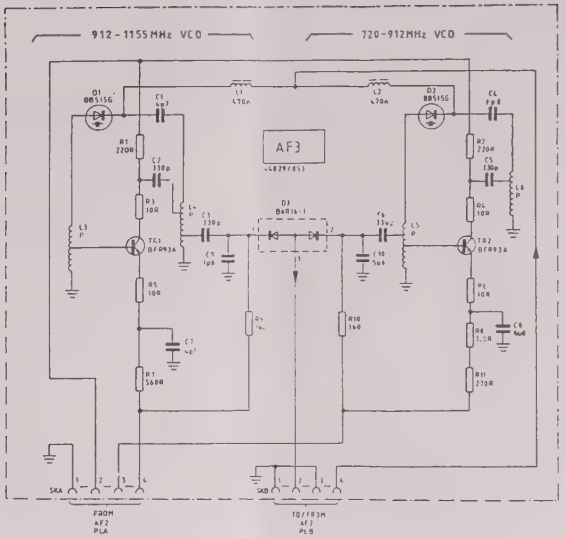

Drg. No. Z44829/853 Sheet 1 of 1

Fig. 7-39 AF3 Voltage controlled oscillator

B1/2

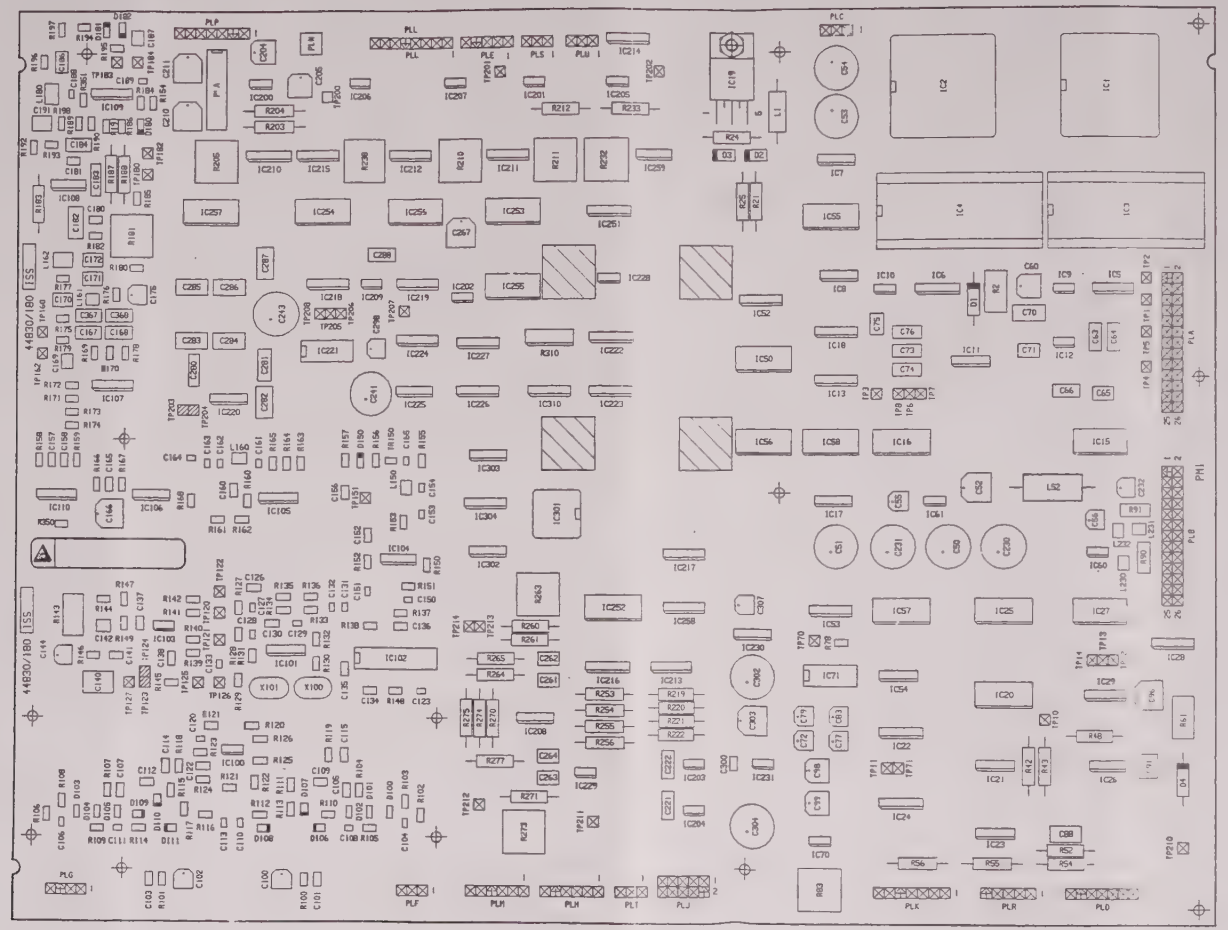

Voltage controlled oscillator AF3

Drg. No. E44830/180

Fig. 7-40 B1/2 Component layout of Audio processor board - top side

Circuit diagram B1/2

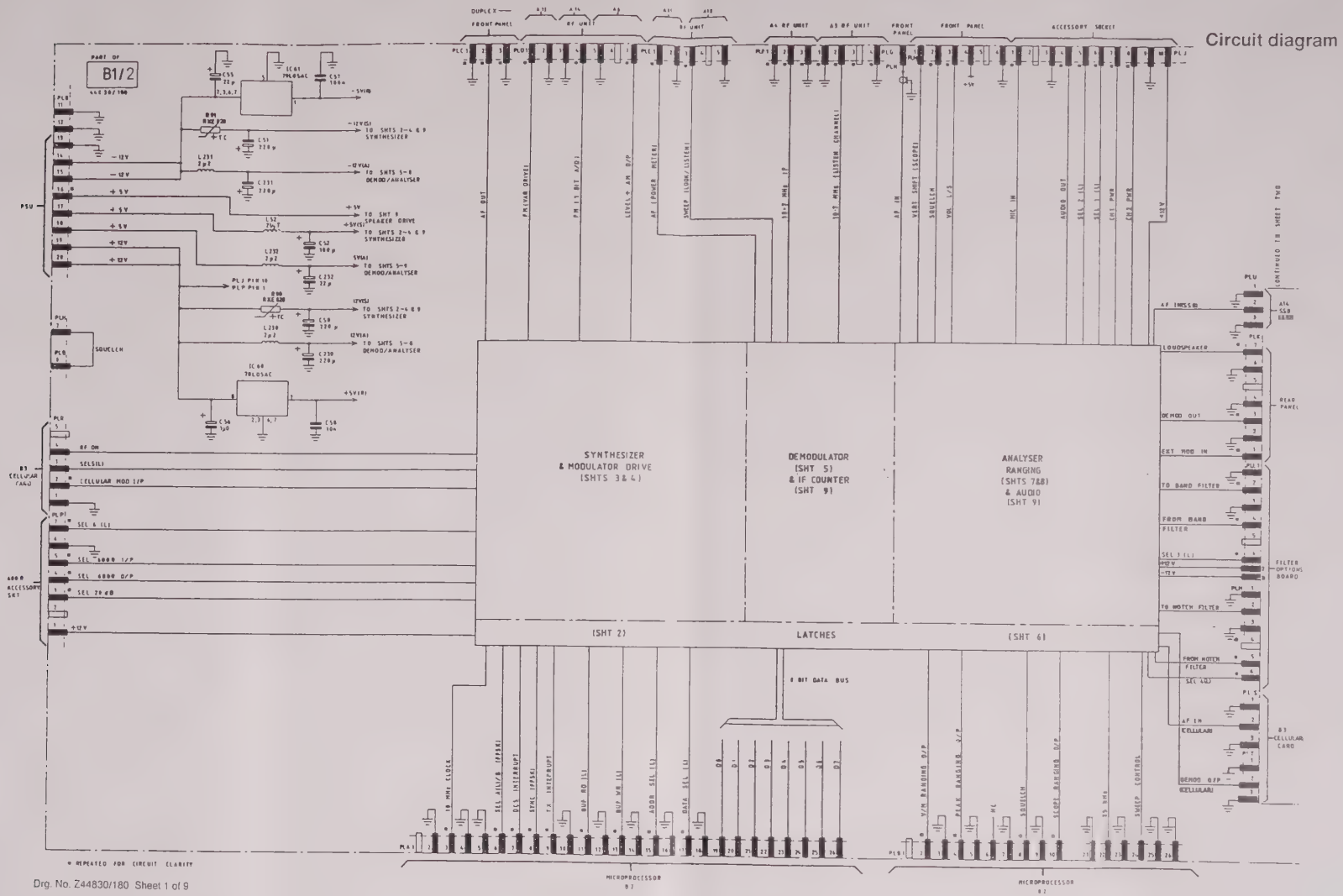

Drg. No. Z44830/180 Sheet 1 of 9

Fig. 7-41 B1/2 Audio processor - interface

B1/2

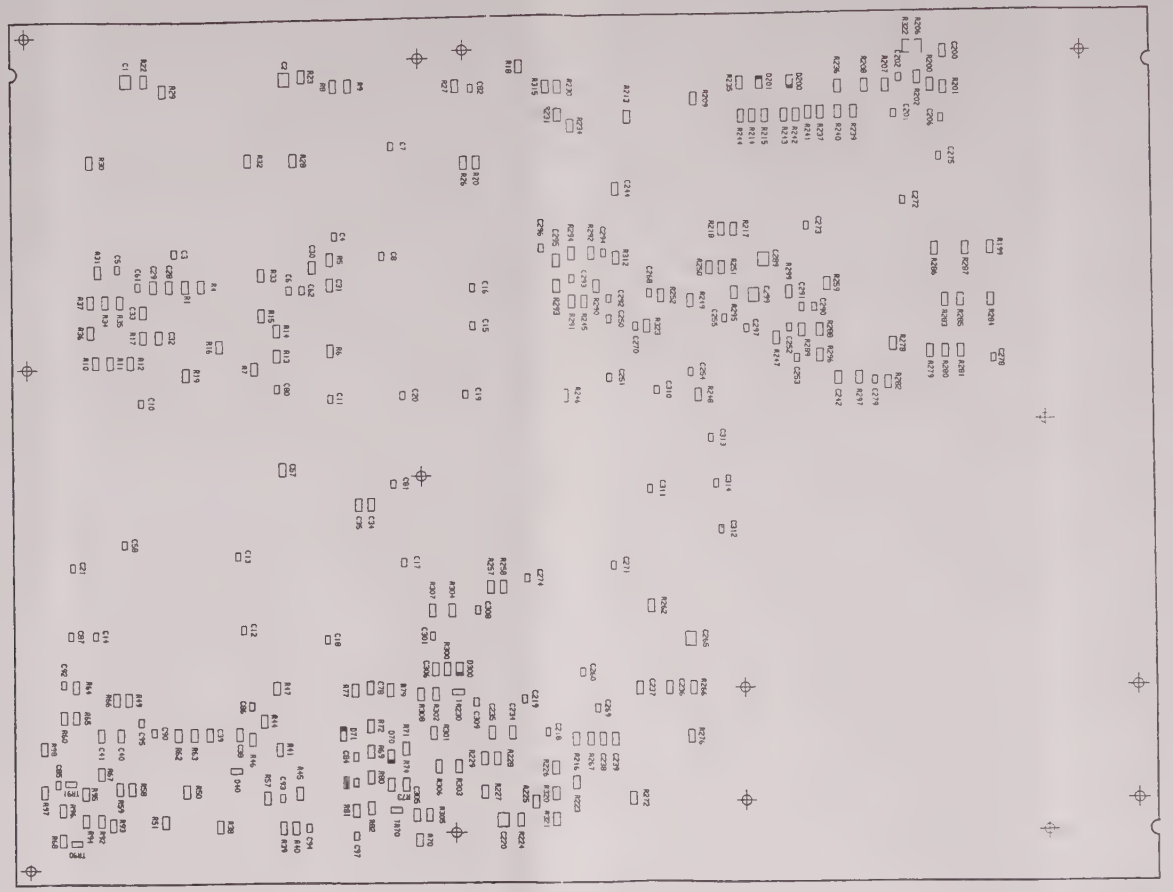

Audio processor - interface **B1/2**

Drg. No. E44830/180

Fig. 7-42 B1/2 Component layout of audio processor board - under side

Circuit diagram B1/2

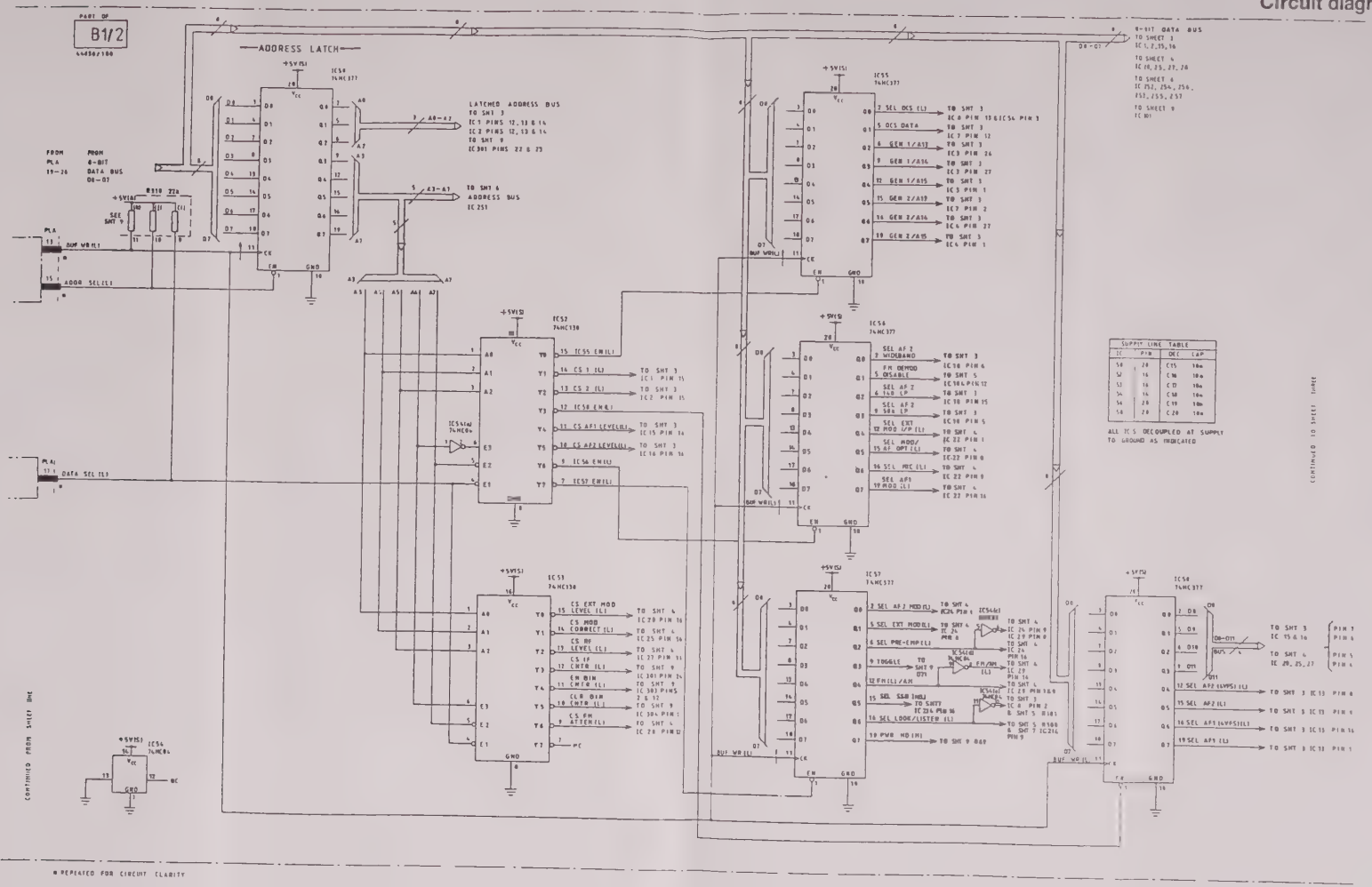

Drg. No. Z44830/180 Sheet 2 of 9

Fig. 7-43 B1/2 Audio processor - synthesizer latches

Audio processor - synthesizer latches
B1/2

Circuit diagram B1/2

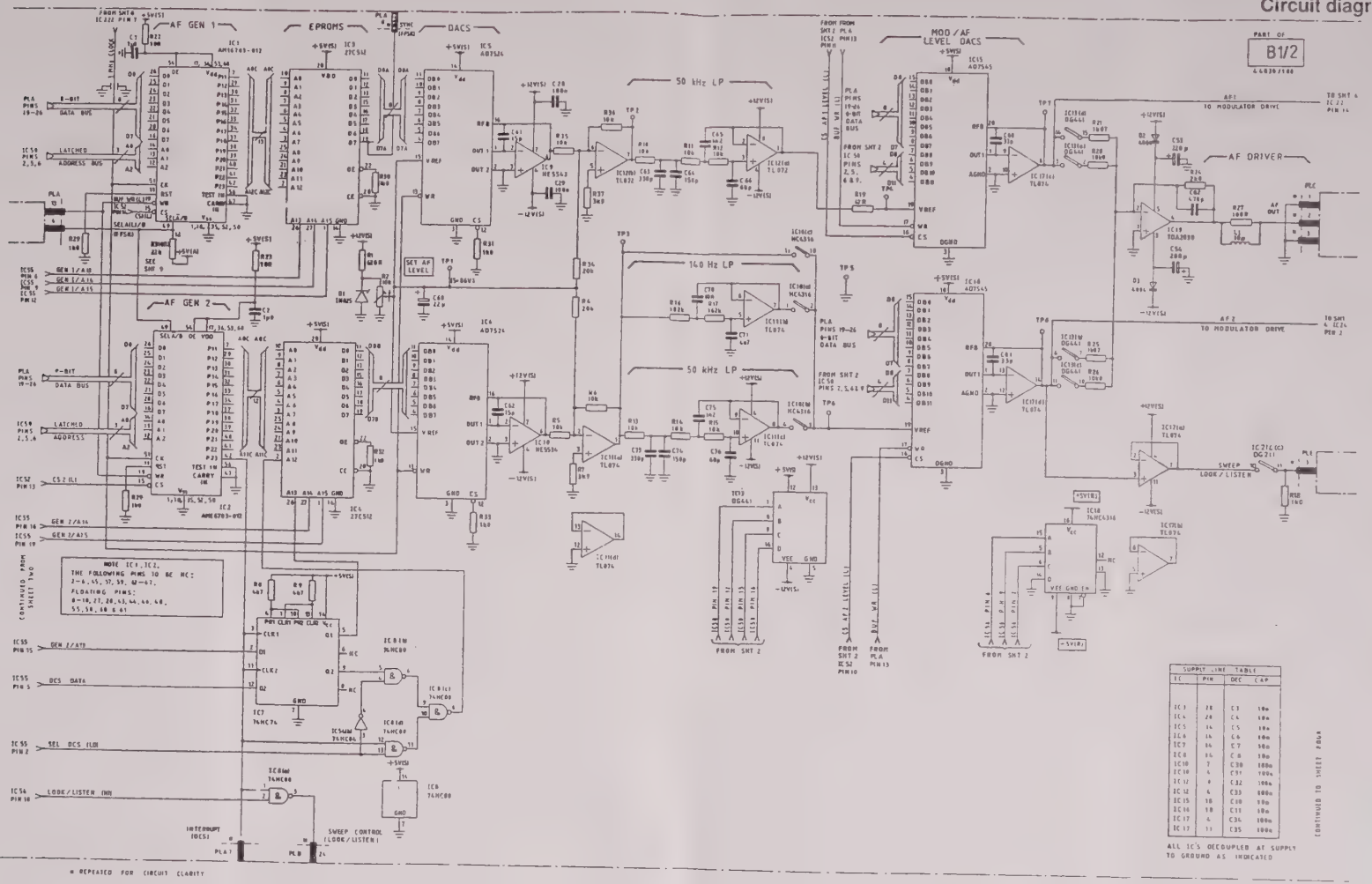

Drg. No. Z448830/180 Sheet 3 of 9

Fig. 7-44 B1/2 Audio processor - AF generators

Audio processor - AF generators **B1/2**

Circuit diagram B1/2

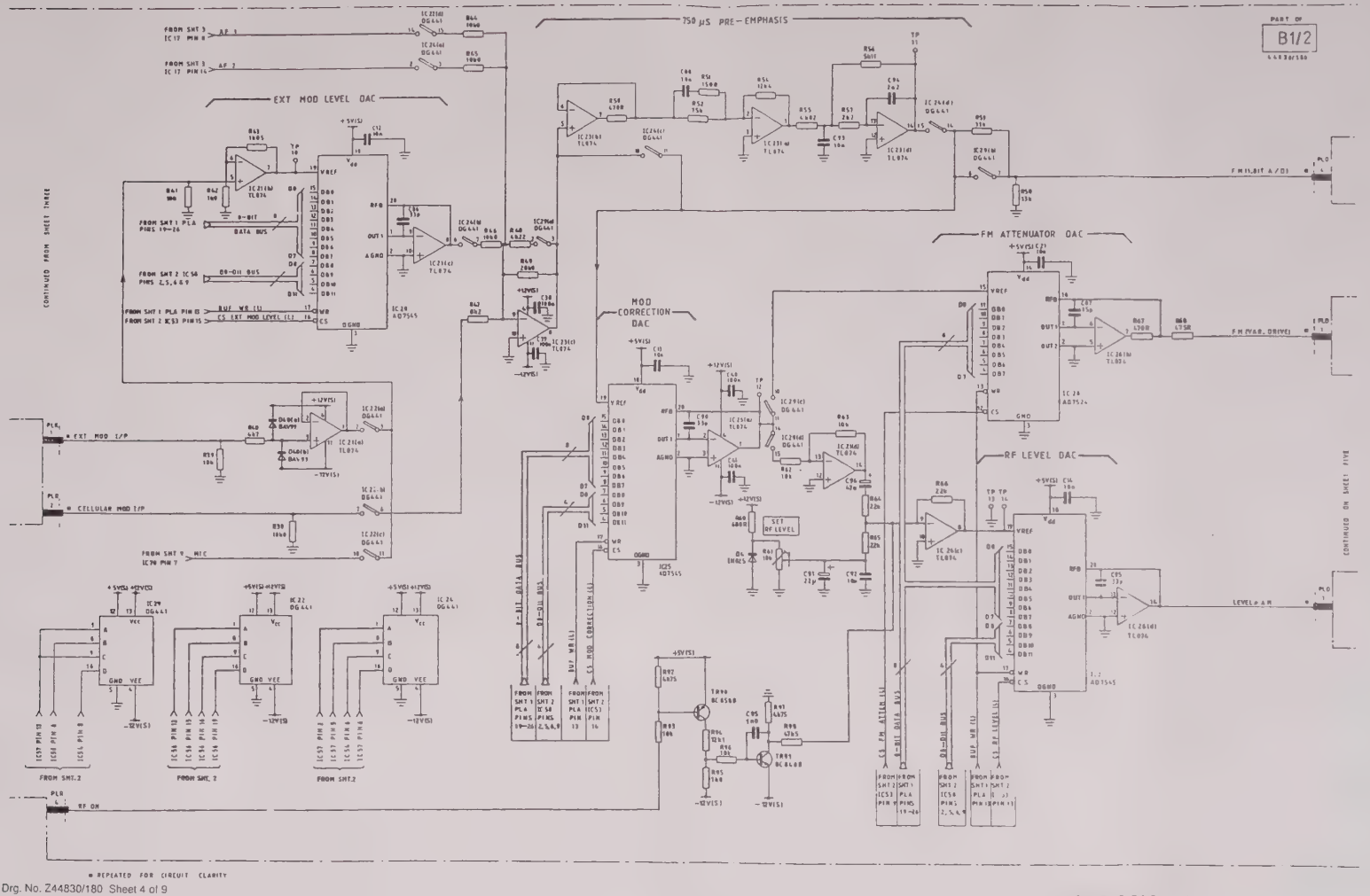

Drg. No. Z44830/180 Sheet 4 of 9

F... 45 B1/2 Audio processor - modulation control

Audio processor - modulation control
B1/2

Circuit diagram B1/2

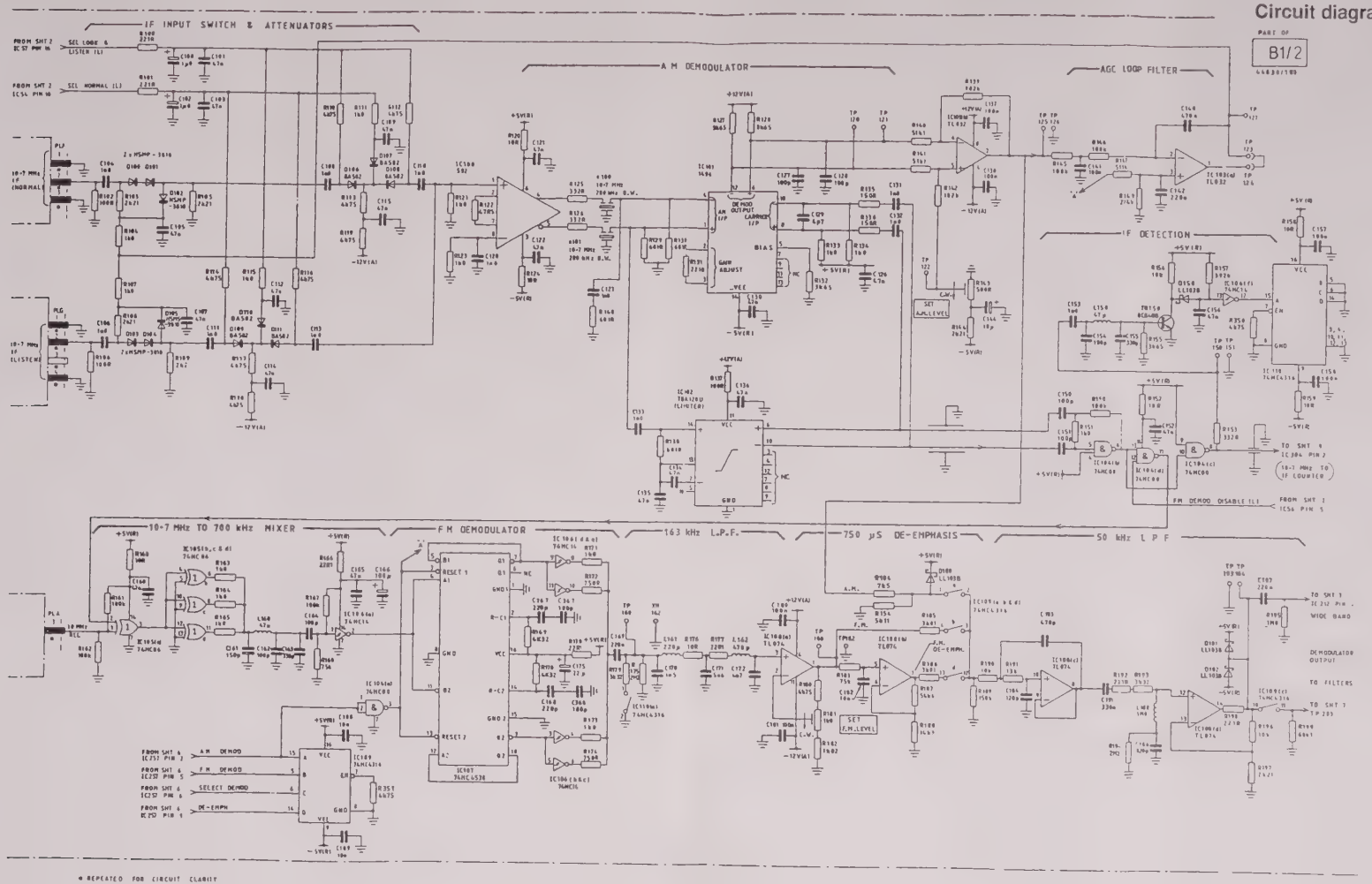

Drg. No. Z448230/180 Sheet 5 of 9

Fig. 7-46 B1/2 Audio processor - demodulators

Audio processor - demodulators B1/2

Circuit diagram B1/2

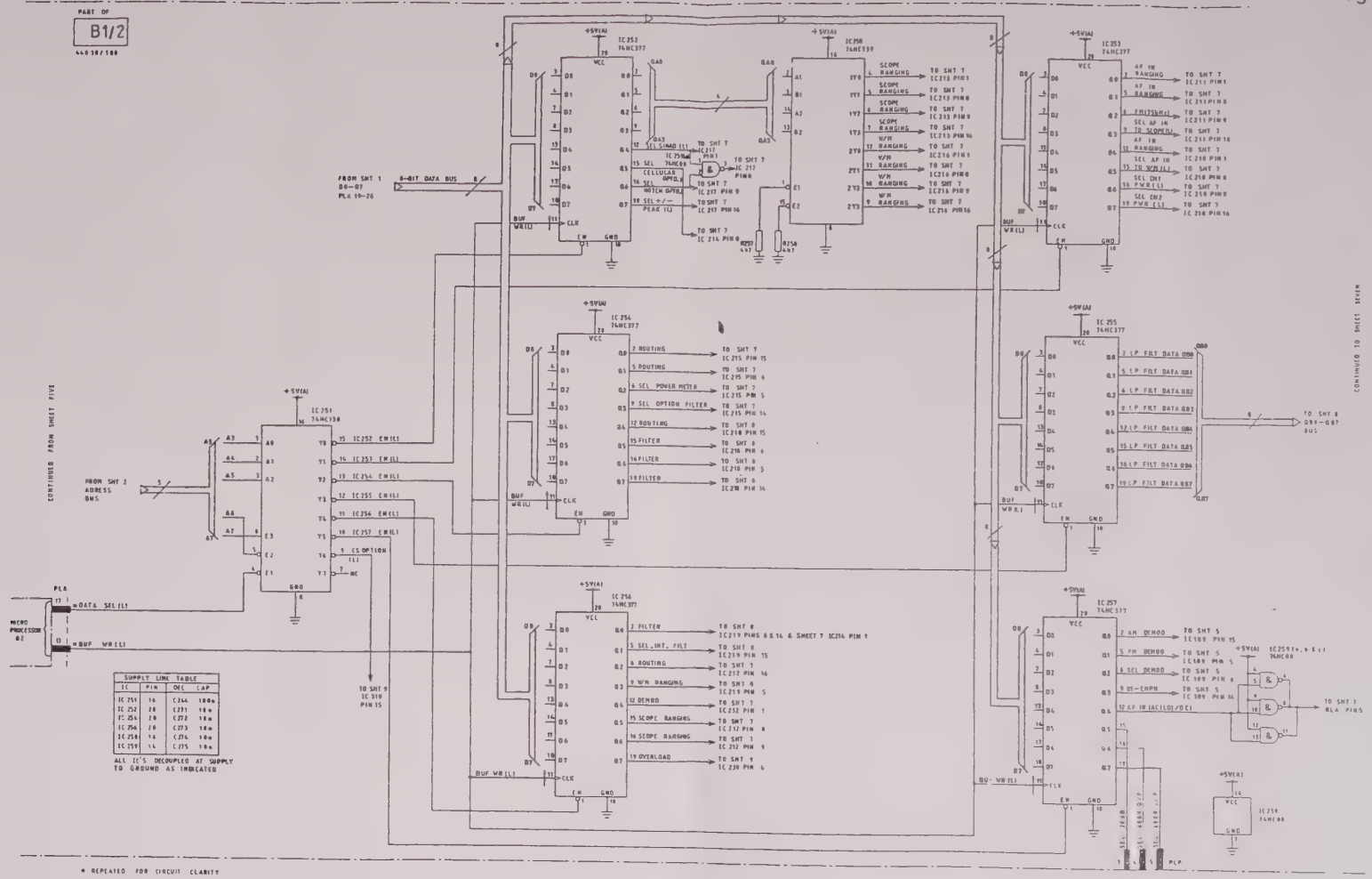

Drg. No. Z44830/180 Sheet 6 of 9

Fig 7-47 B1/2 Audio processor - analyzer latches

Audio processor - analyzer latches
B1/2

Circuit diagram B1/2

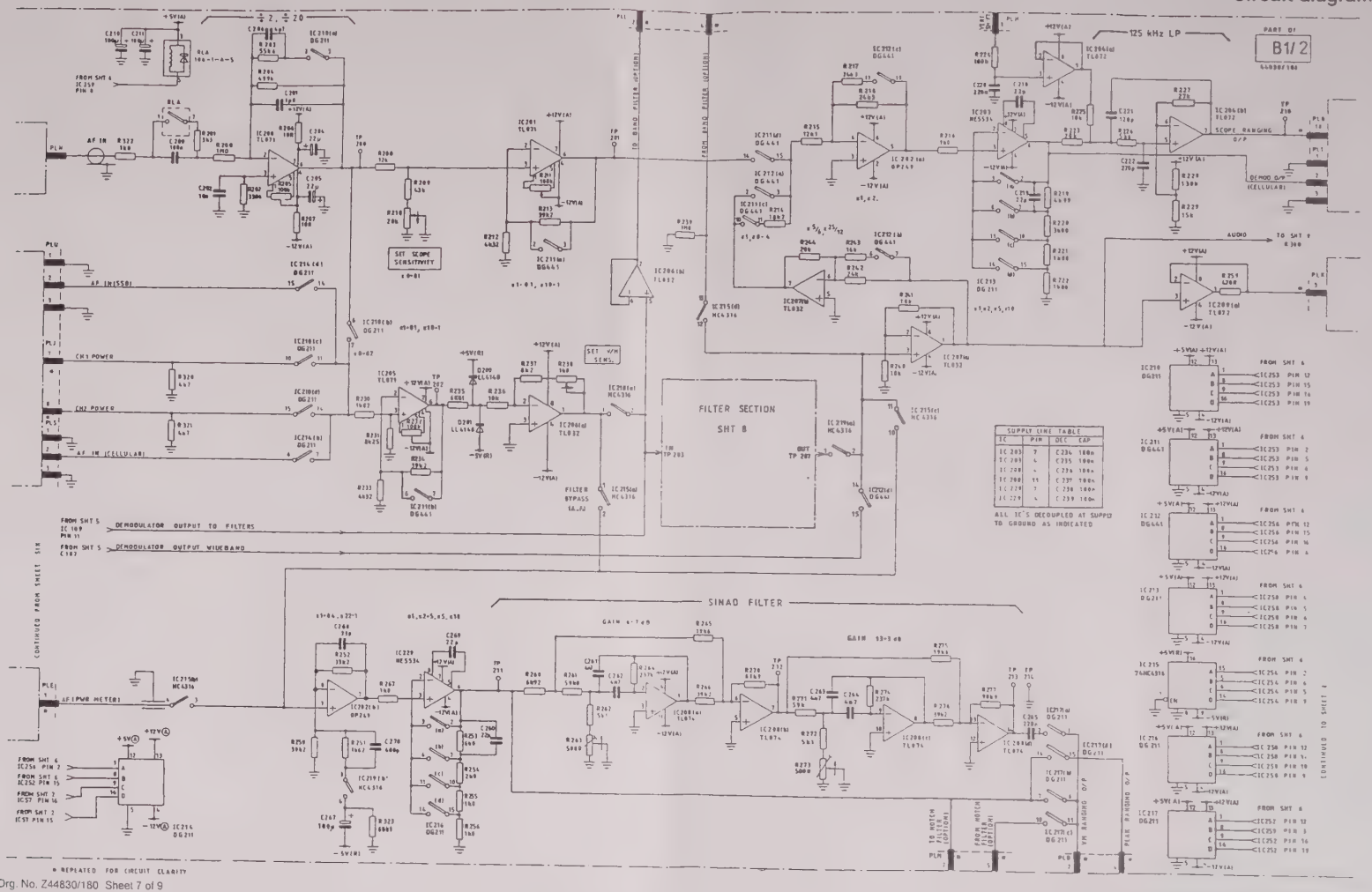

Drg. No. Z44830/180 Sheet 7 of 9

Fig. 7-48 B1/2 Audio processor analyzer ranging

Audio processor - analyzer ranging **B1/2**

Circuit diagram B1/2

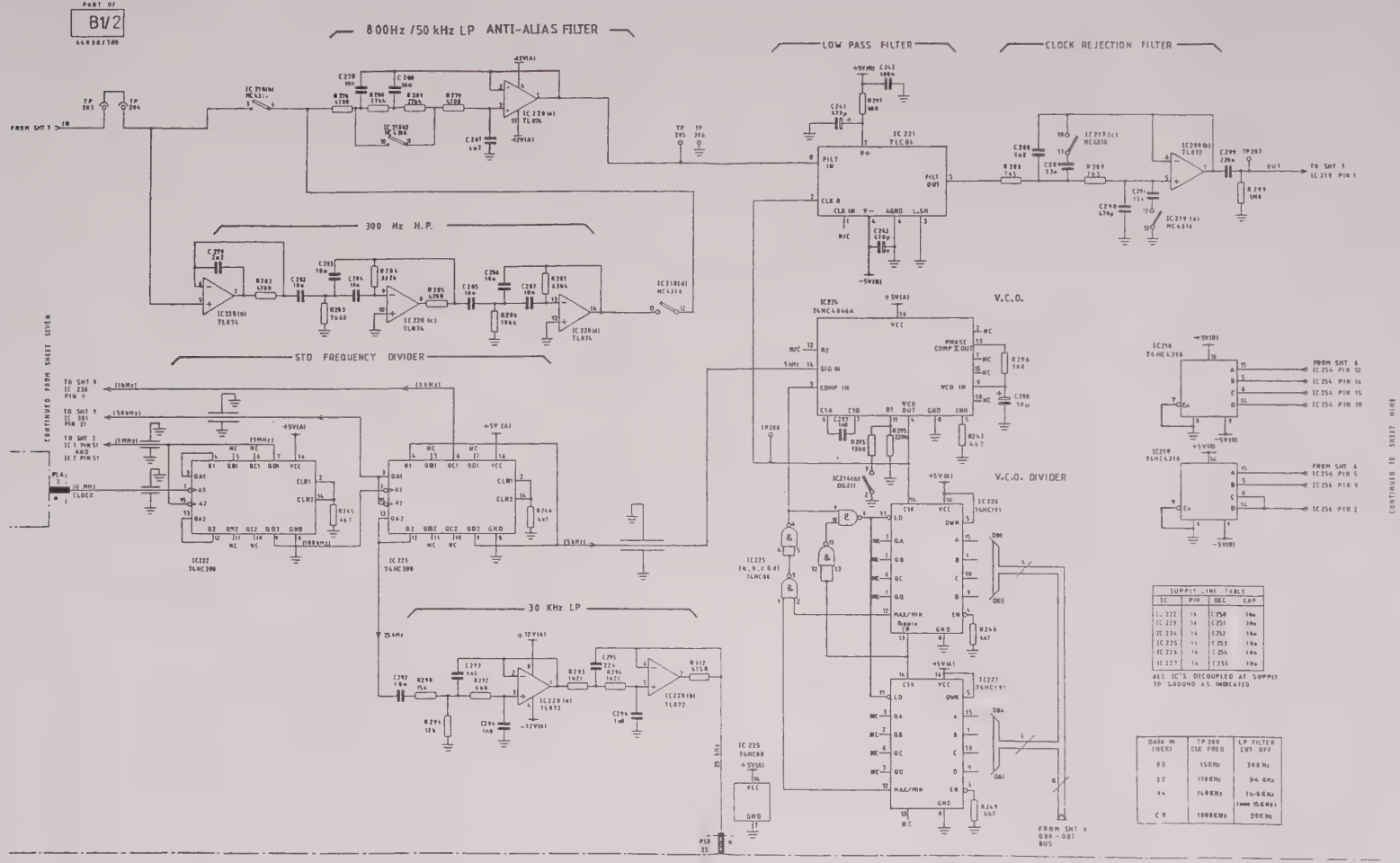

Drg. No. Z44830/180 Sheet 8 of 9

Fig. 7.34 B1.2 Audio processor - band filters & LS drive

Audio processor - band filters & L/S drive **B1/2**

Circuit diagram B1/2

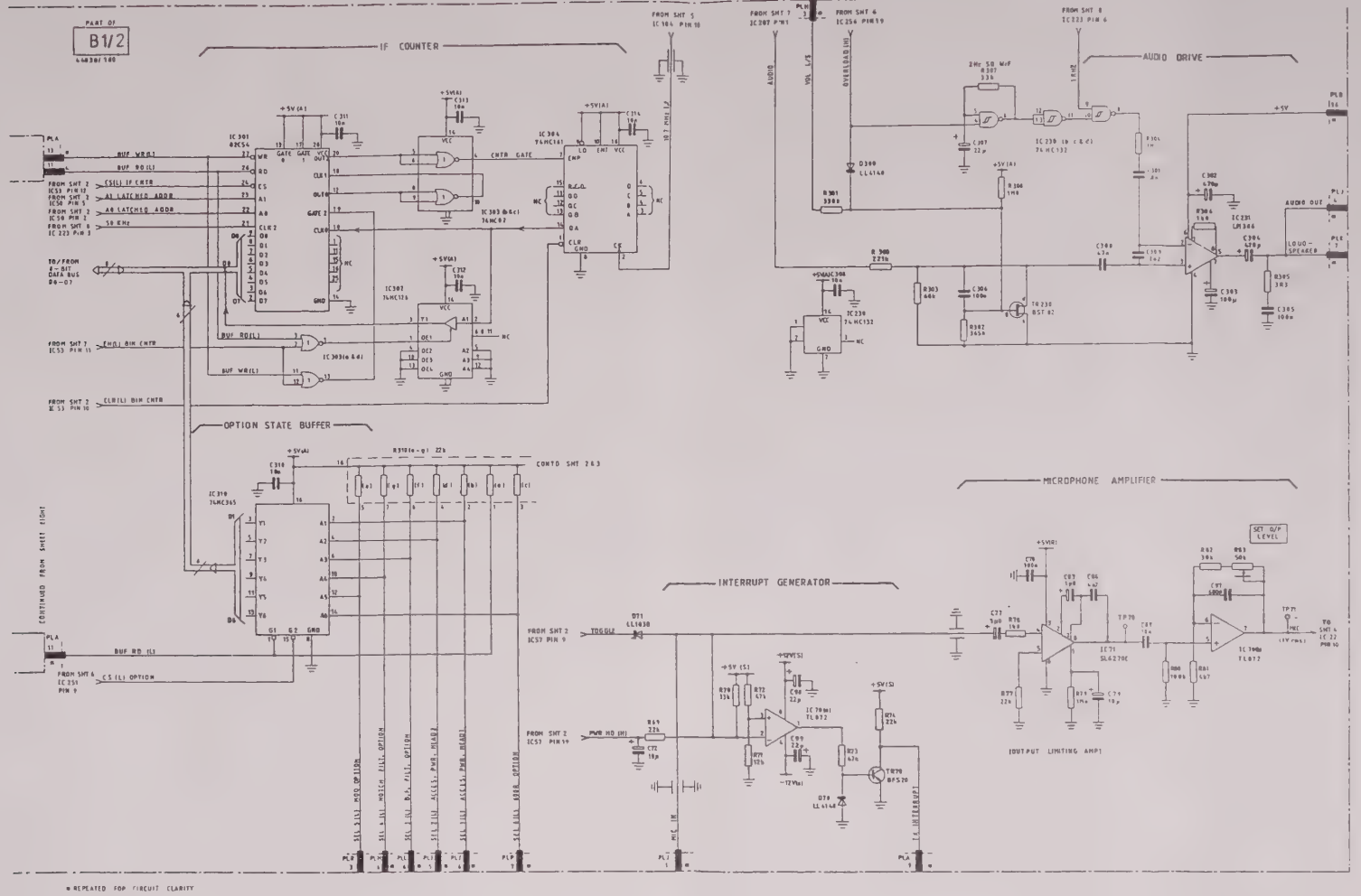

Drg. No. Z44830/180 Sheet 9 of 9

Fig. 7-50 B1/2 Audio processor - IF counter & audio

B2/1

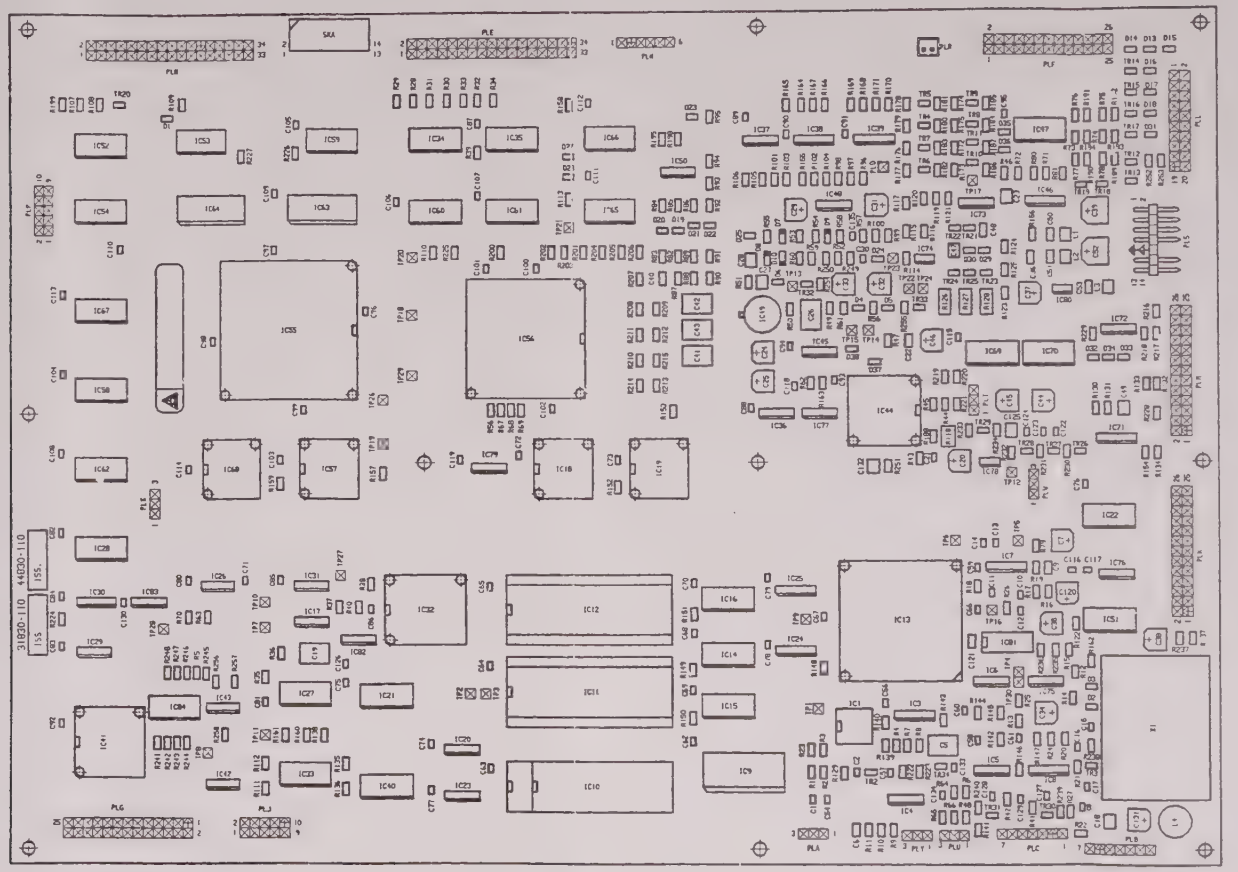

Audio processor - IF counter & audio **B1/2**

Drg. No. E44830/110

Fig. 7-51 B2/1 Component layout of microprocessor board

Circuit diagram B2/1

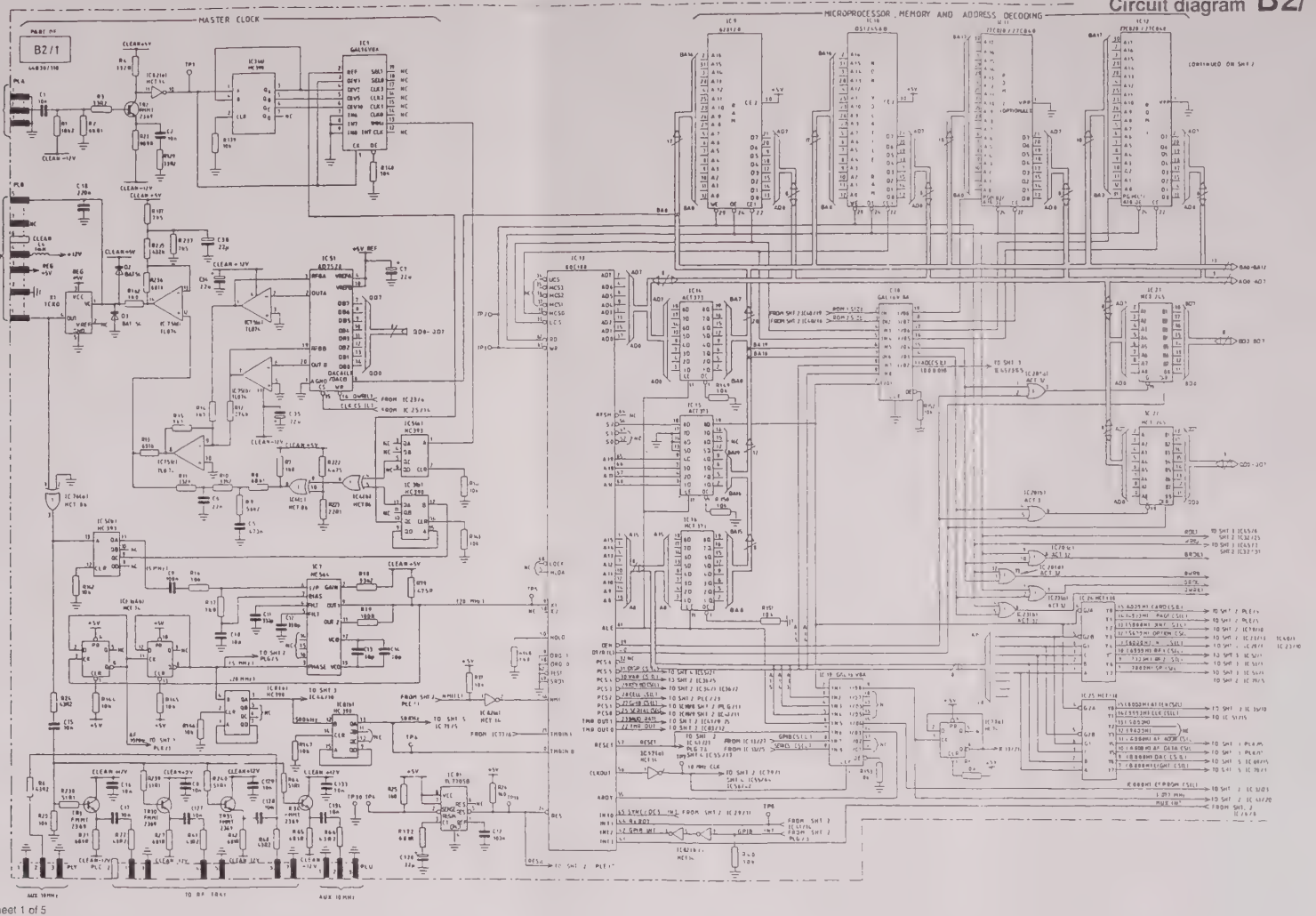

Drg. No. Z448230/110 Sheet 1 of 5

Fig. 7-52 B2/1 Microprocessor

Microprocessor B2/1

Circuit diagram B2/1

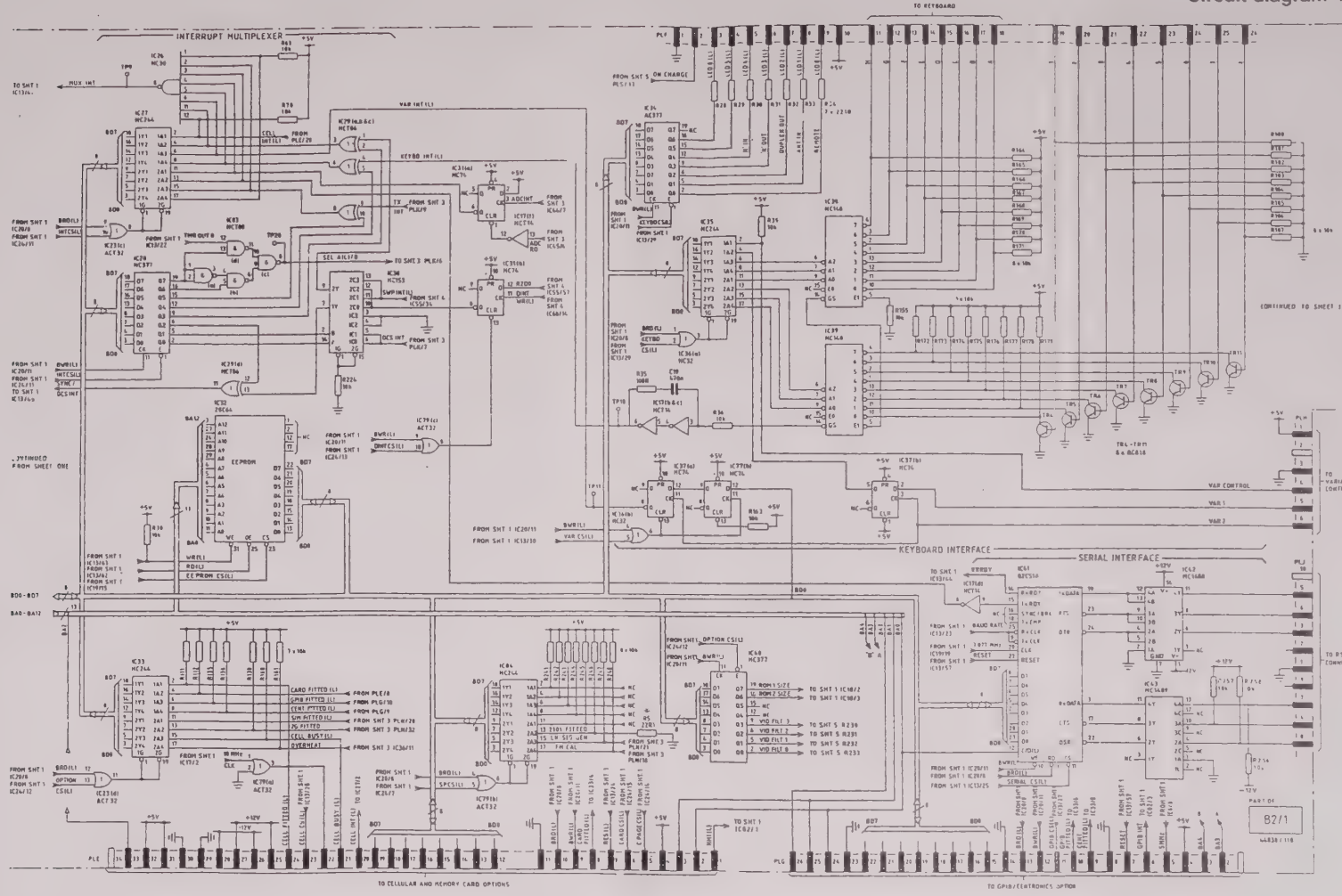

Drg. No. Z44830/110 Sheet 2 of 5

Fig. 7-53 B2/1 Microprocessor

Microprocessor B2/1

Circuit diagram B2/1

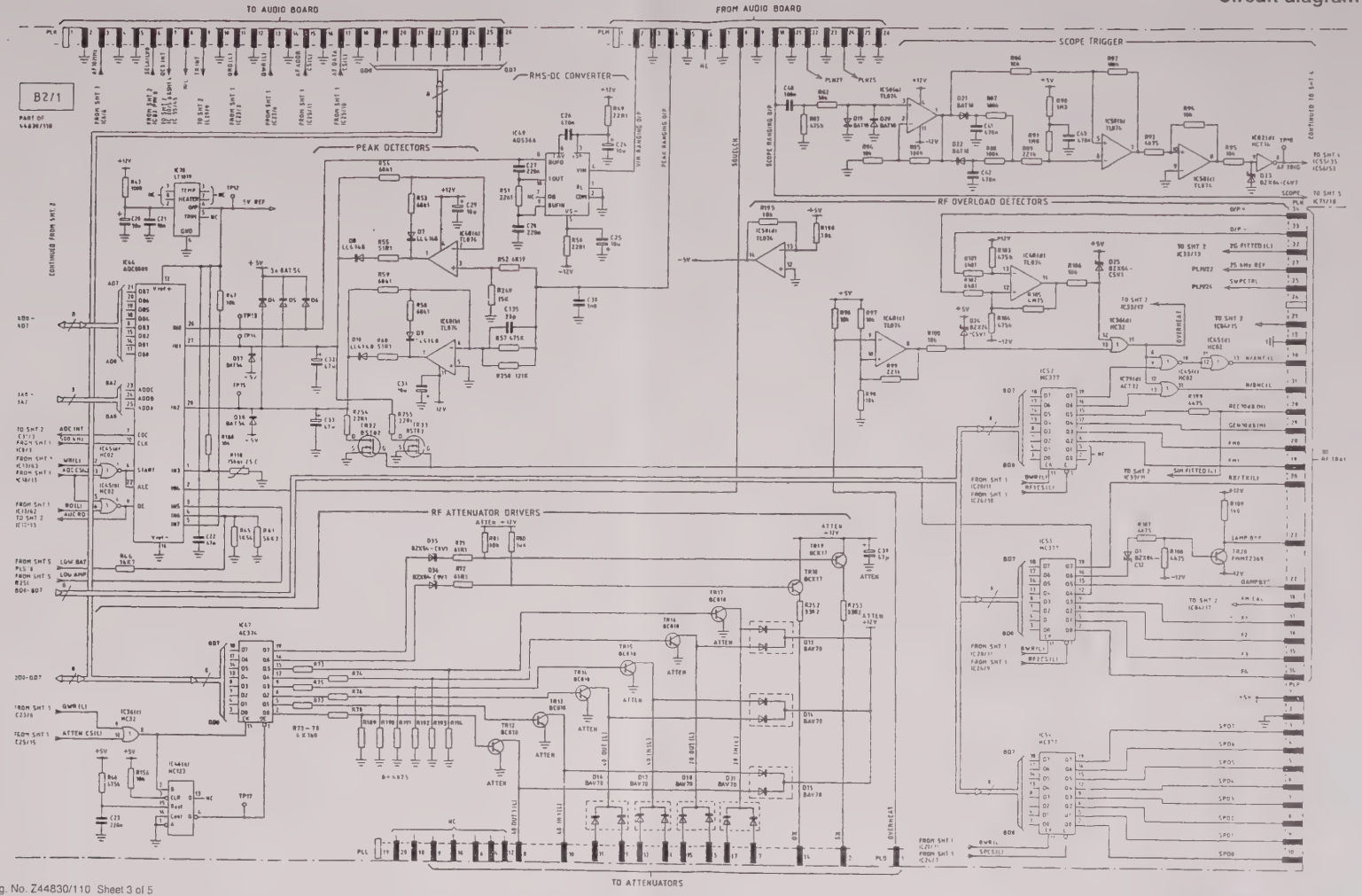

Drg. No. Z44830/110 Sheet 3 of 5

Fig. 54 B2/1 Microprocessor

Microprocessor B2/1

Circuit diagram B2/1

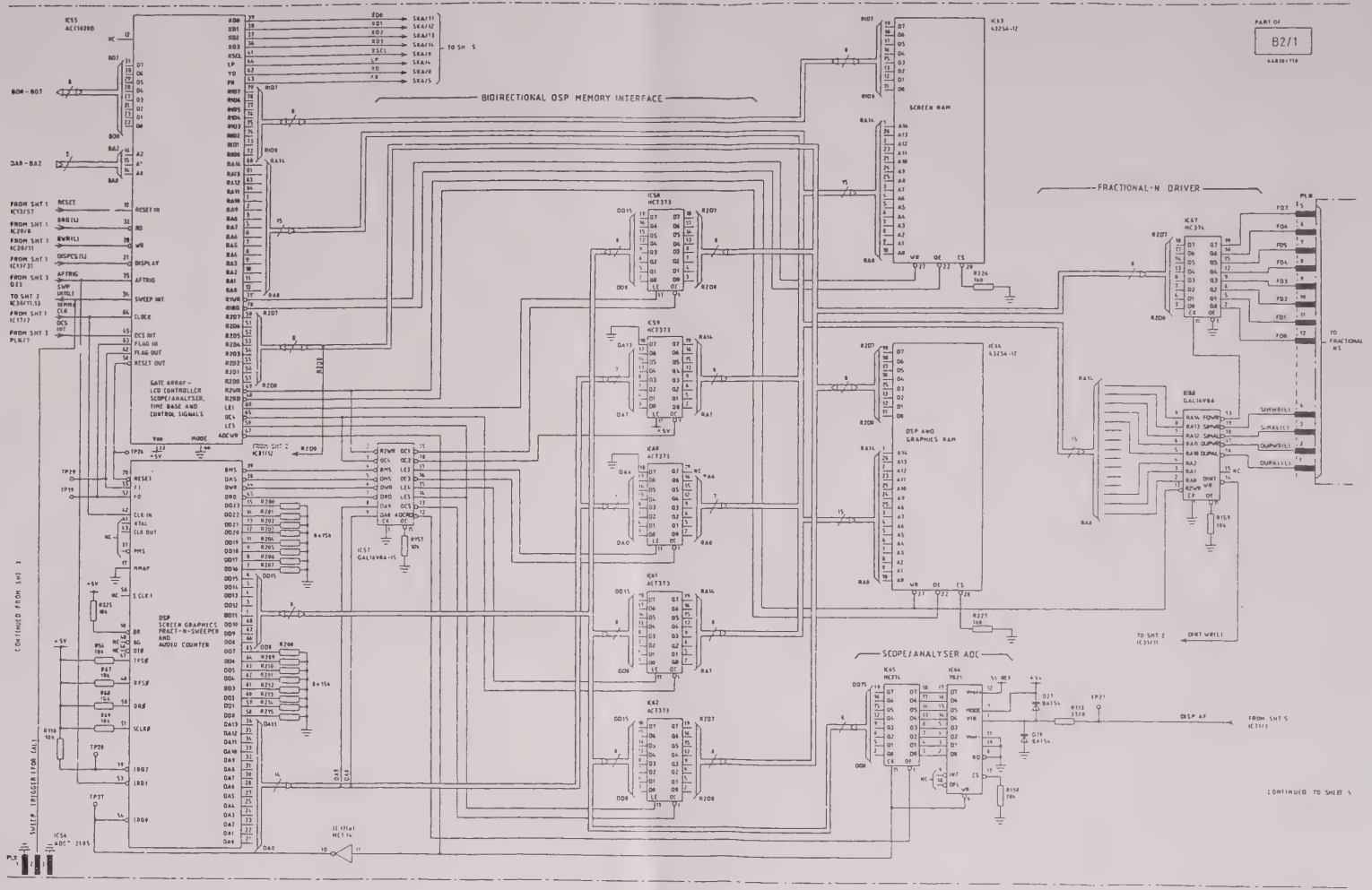

Drg. No. Z44830/110 Sheet 4 of 5

Fig. 7-55 B2/1 Microprocessor

Microprocessor B2/1

Circuit diagram B2/1

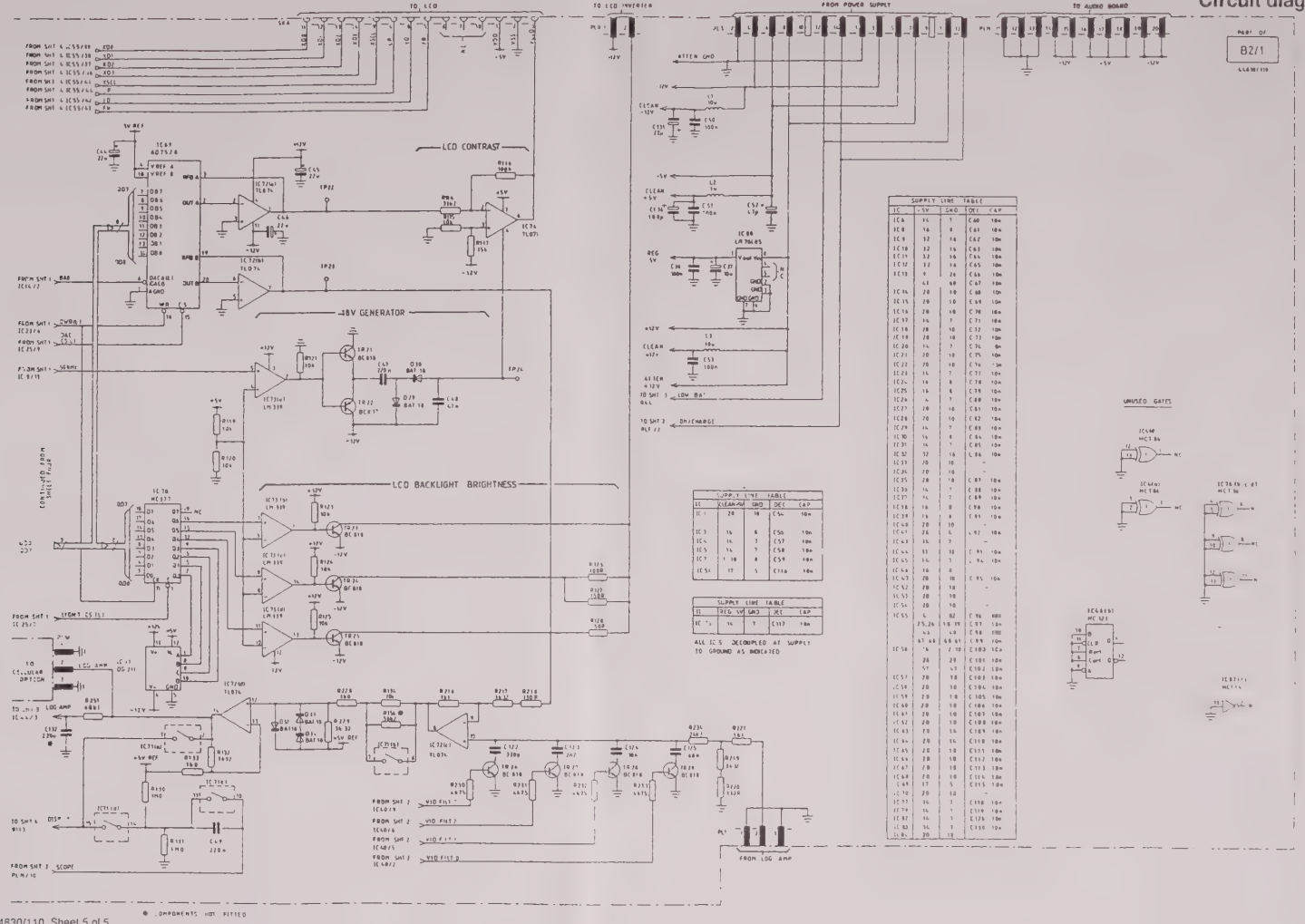

Drg. No. Z44830/110 Sheet 5 of 5

Fig. 56 B2/1 Microprocessor

B3/1

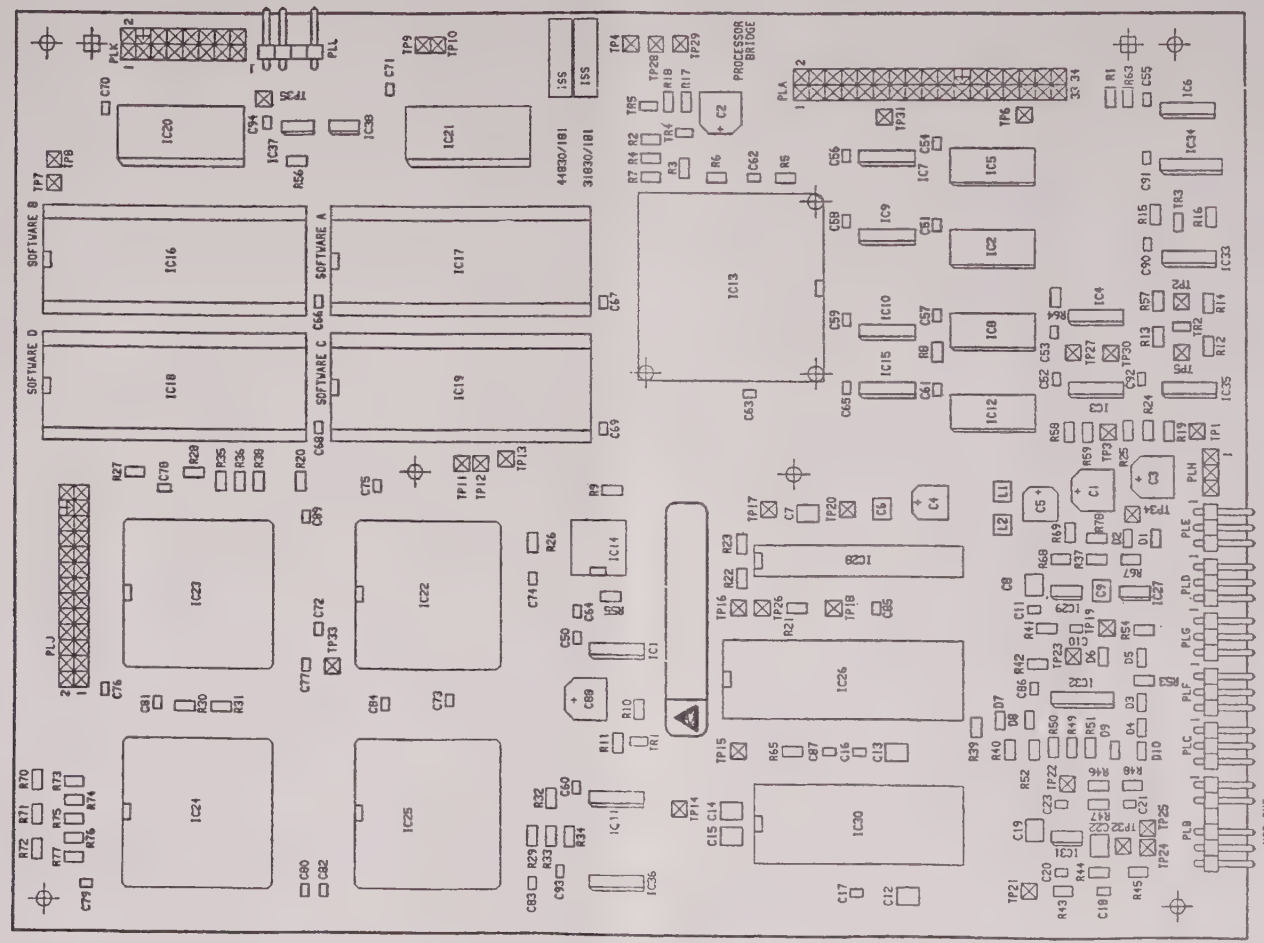

Drg. No. E44830/181

Fig. 7-57 B3/1 Component layout of analogue cellular controller

Circuit diagram B3/1

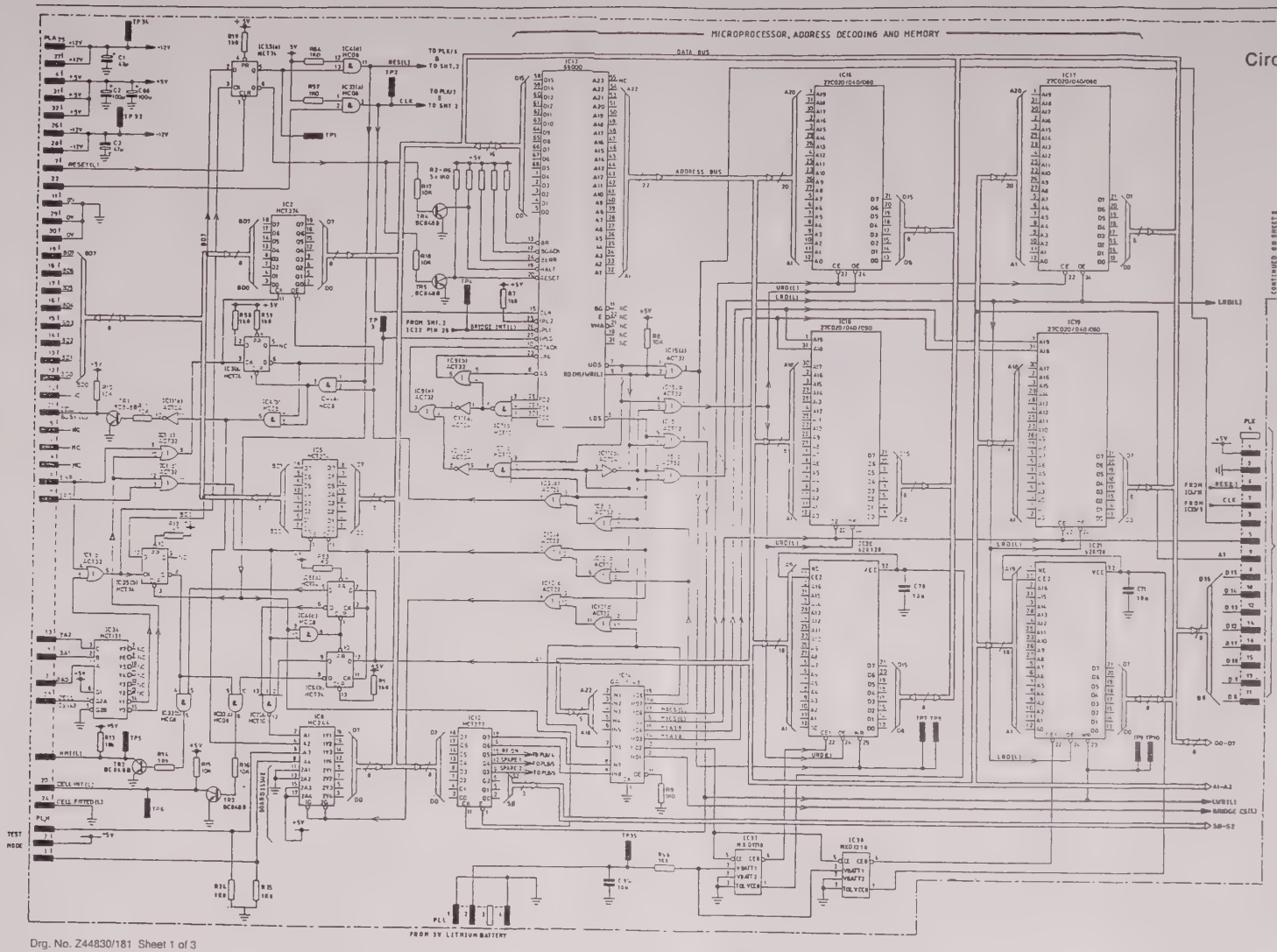

Drg. No. Z44830/181 Sheet 1 of 3

Fig. 7-58 B3/1 Analogue cellular controller

Analogue cellular controller B3/1

Circuit diagram B3/1

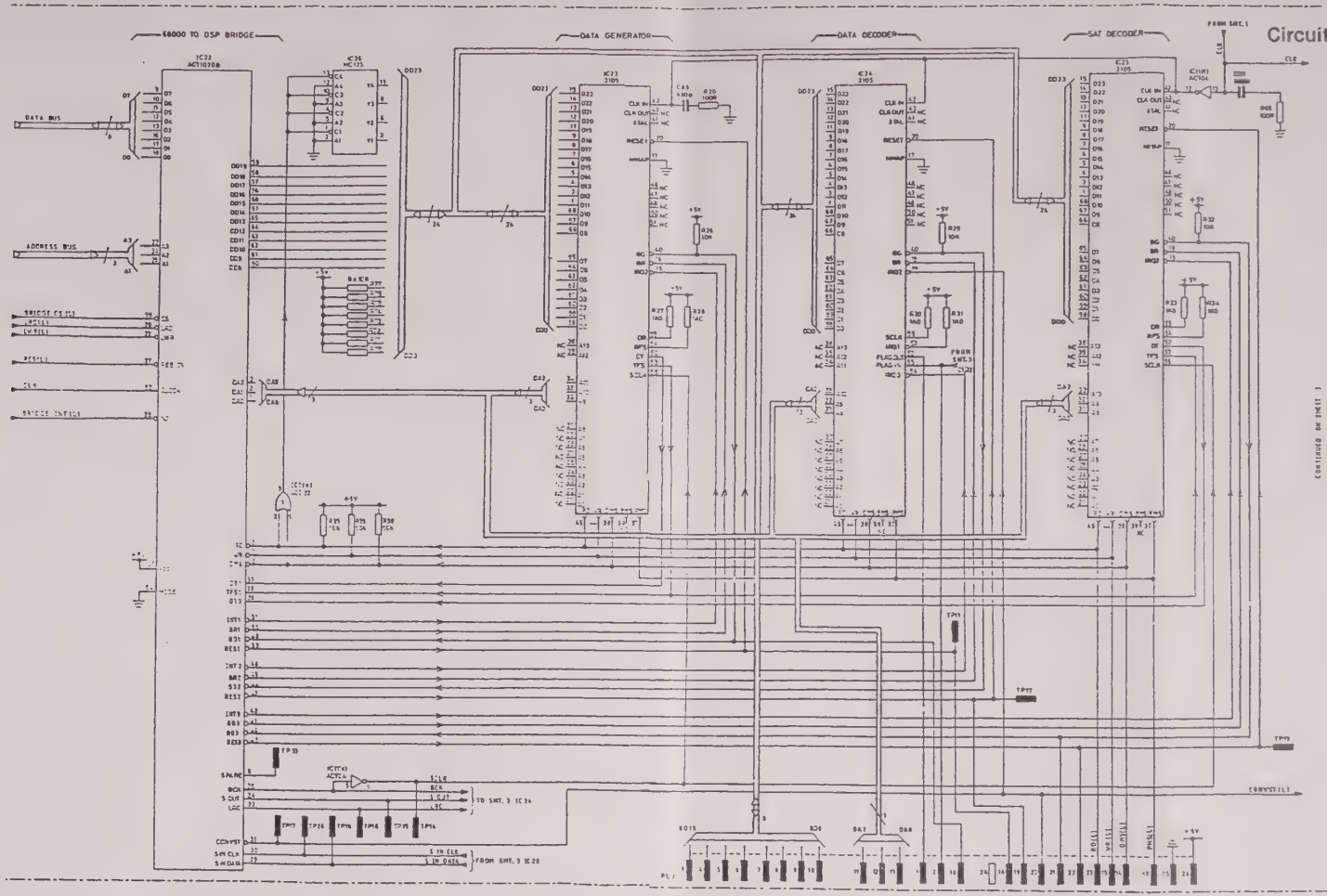

Drg. No. Z44830/181 Sheet 2 of 3

Fig. 7-59 B3/1 Analogue cellular controller

Analogue cellular controller **B3/1**

Circuit diagram B3/1

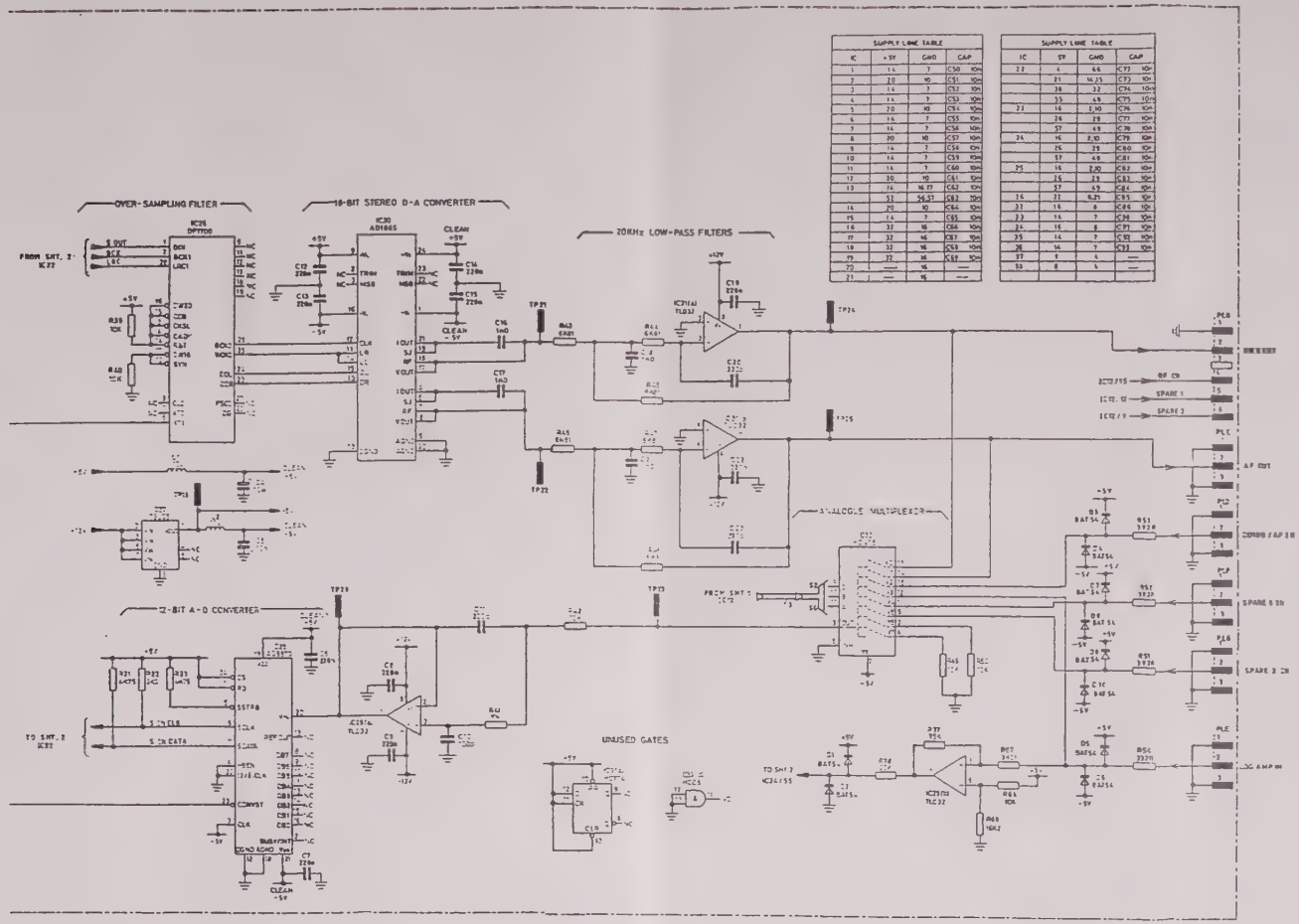

Drg. No. Z44830/181 Sheet 3 of 3

Fig. 7-60 B3/1 Analogue cellular controller

B4

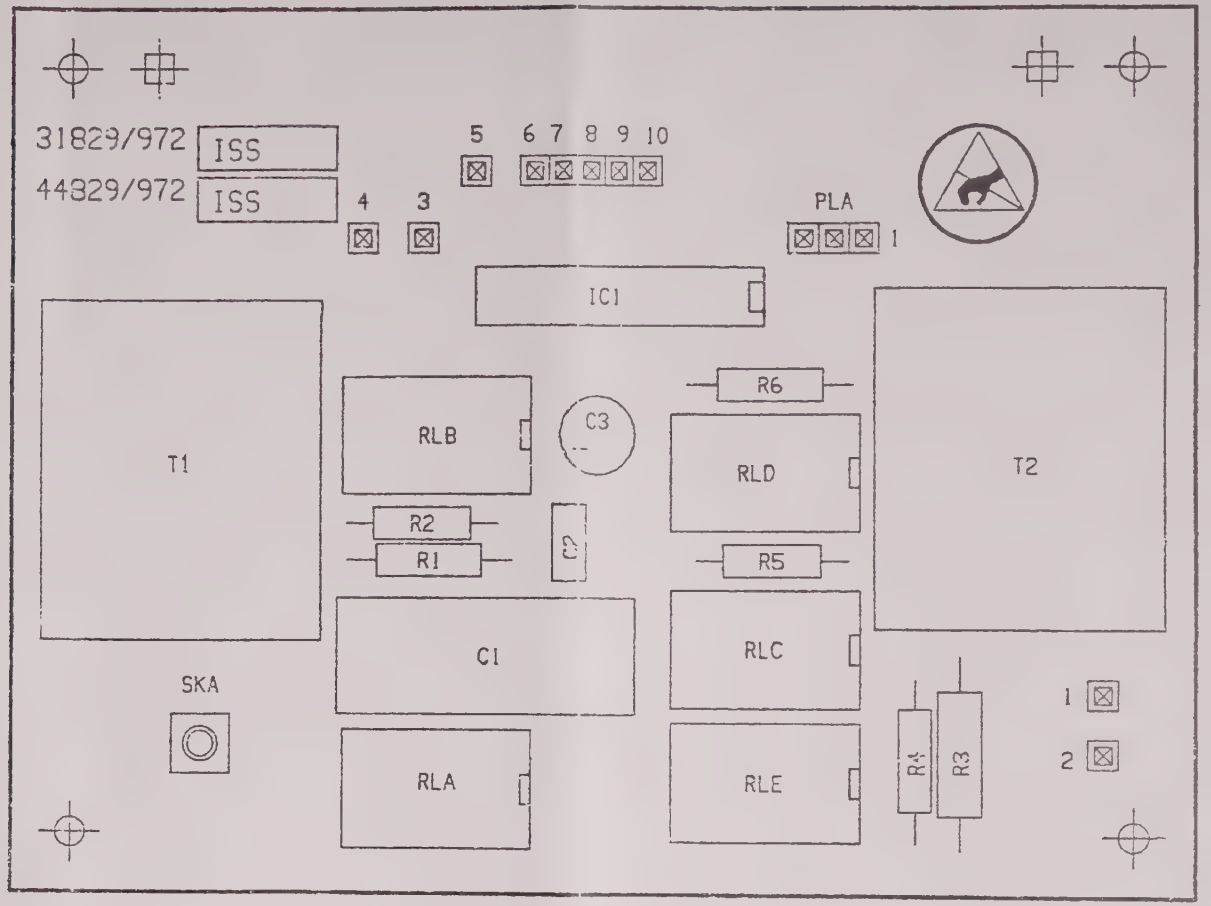

Analogue cellular controller **B3/1**

Drg. No. E44829/972

Fig. 7-61 B4 Component layout of 600Ω interface

Circuit diagram B4

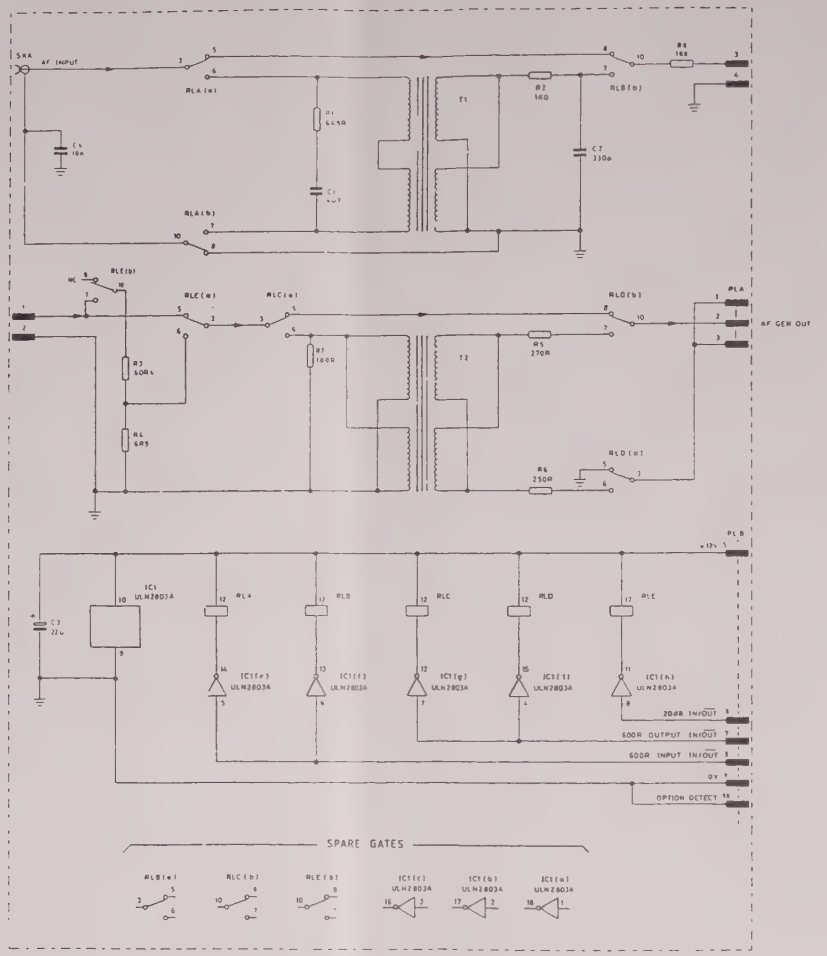

Drg. No. Z44829/972 Sheet 1 of 1

Fig. 7-62 B4 600Ω interface

B7

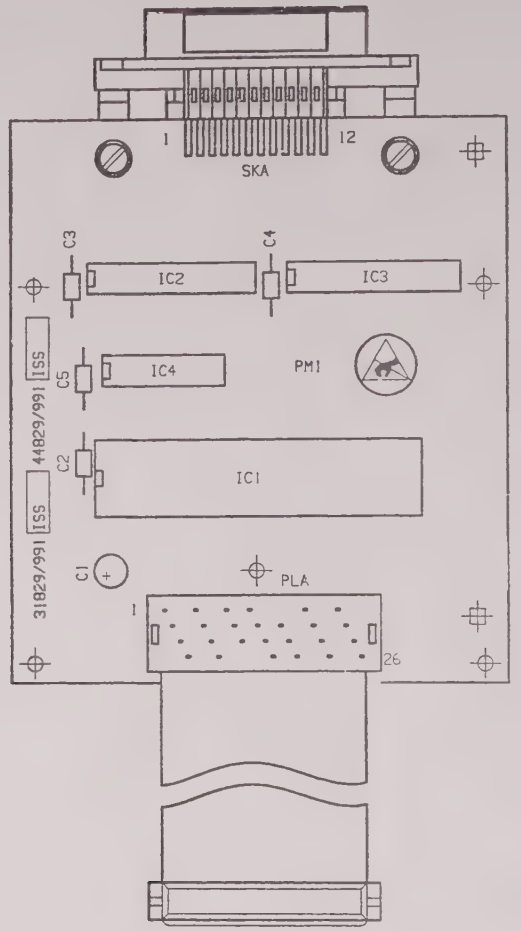

600Ω interface B4

Drg. No. E44829/991

Fig. 7-63 B7 Component layout of GPIB interface

Circuit diagram B7

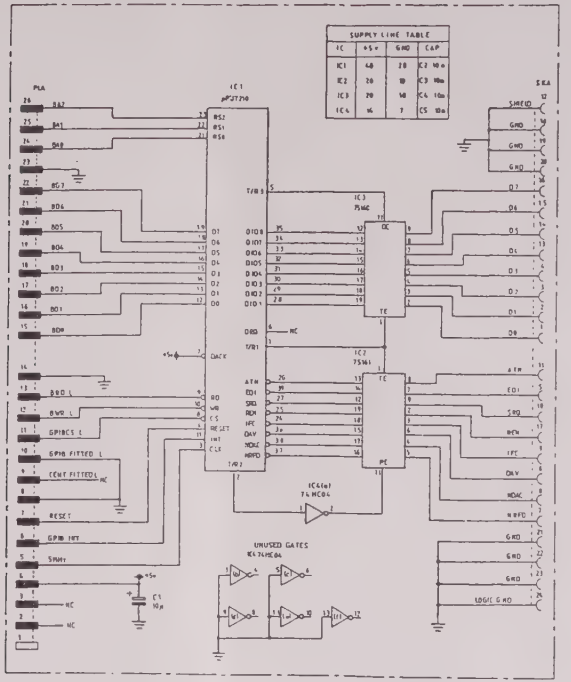

Drg. No. Z44829/991 Sheet 1 of 1

Fig. 7-64 B7 GPIB interface

B12

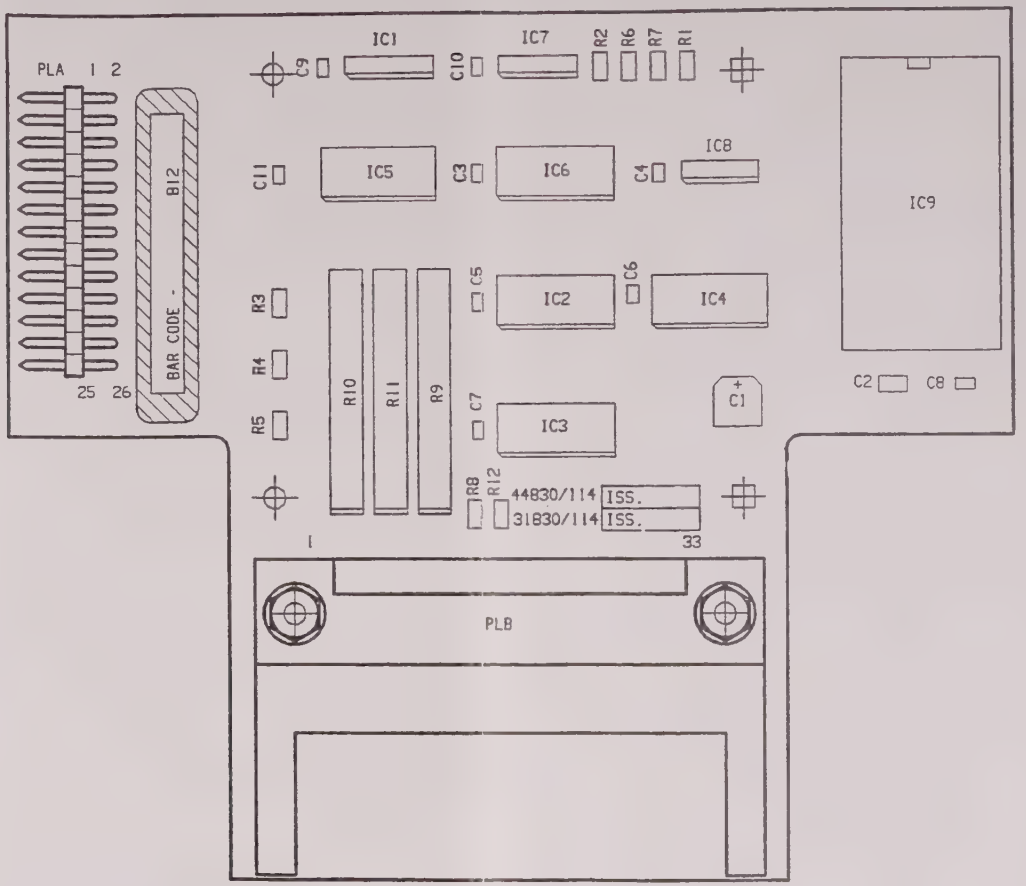

Drg. No. E44830/114

Fig. 7-65 B12 Component layout of Memory card interface

Circuit diagram B12

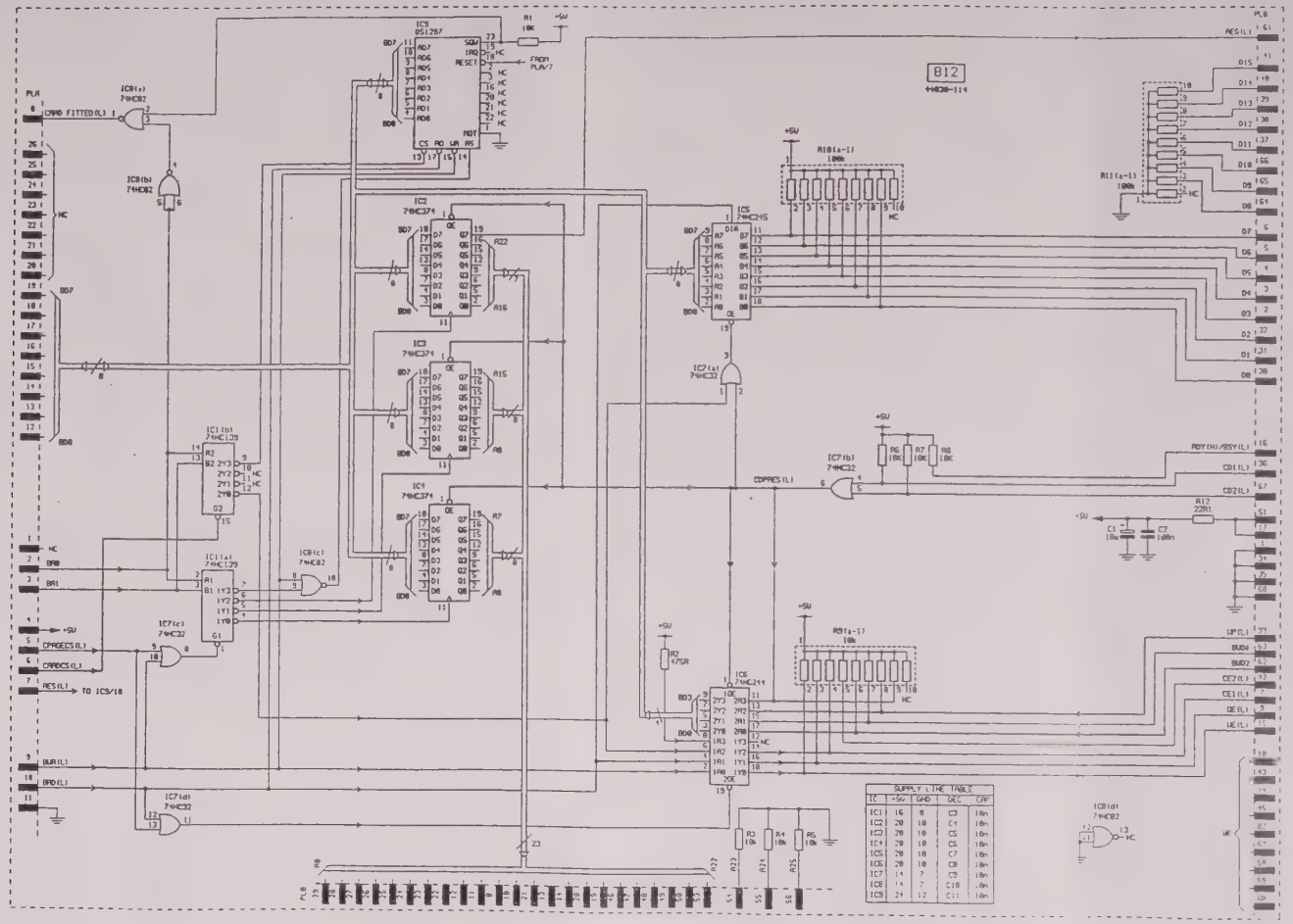

Drg. No. Z44830/114 Sheet 1 of 1

Fig. 7-66 B12 Memory card interface

C1

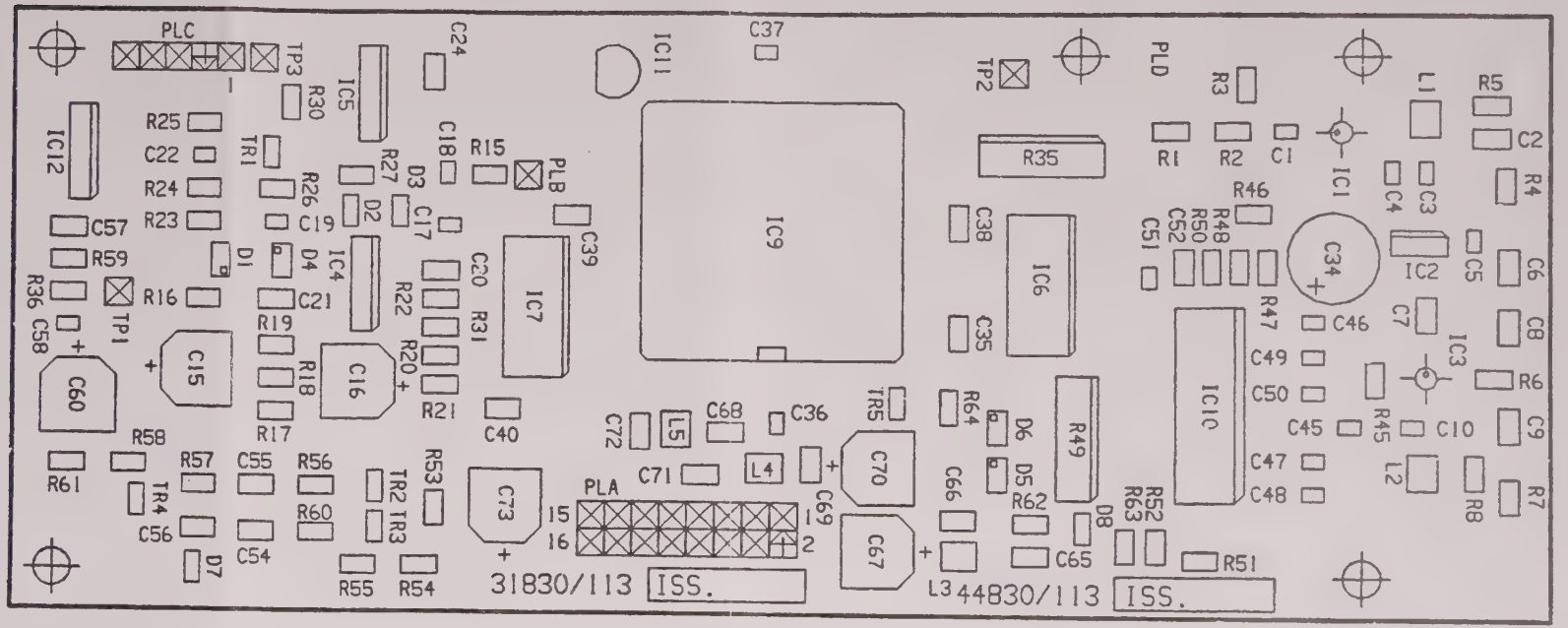

Memory card interface **B12**

Drg. No. E44830/113

Fig. 7-67 C1 Component layout of RF generator control

Circuit diagram C1

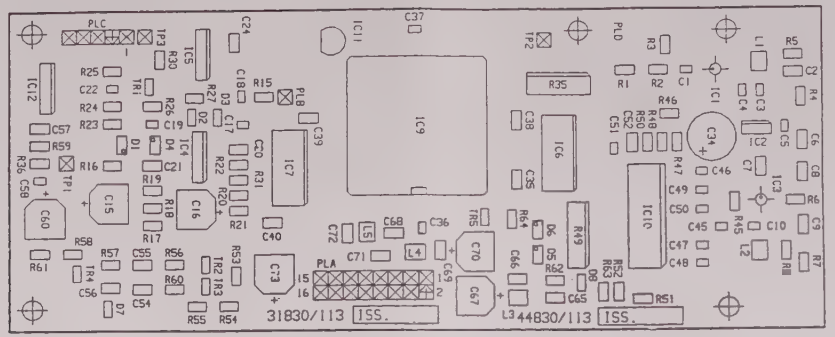

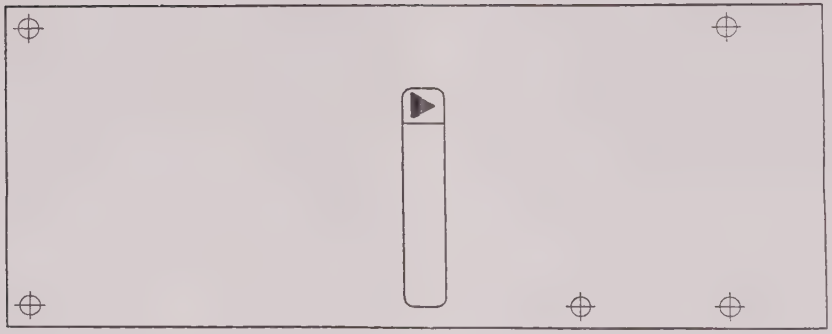

Drg. No. E44830/113

Fig. 7-68 C1 Assembly drawing of RF generator control

Assembly drawing of RF generator control **C1**

Circuit diagram C1

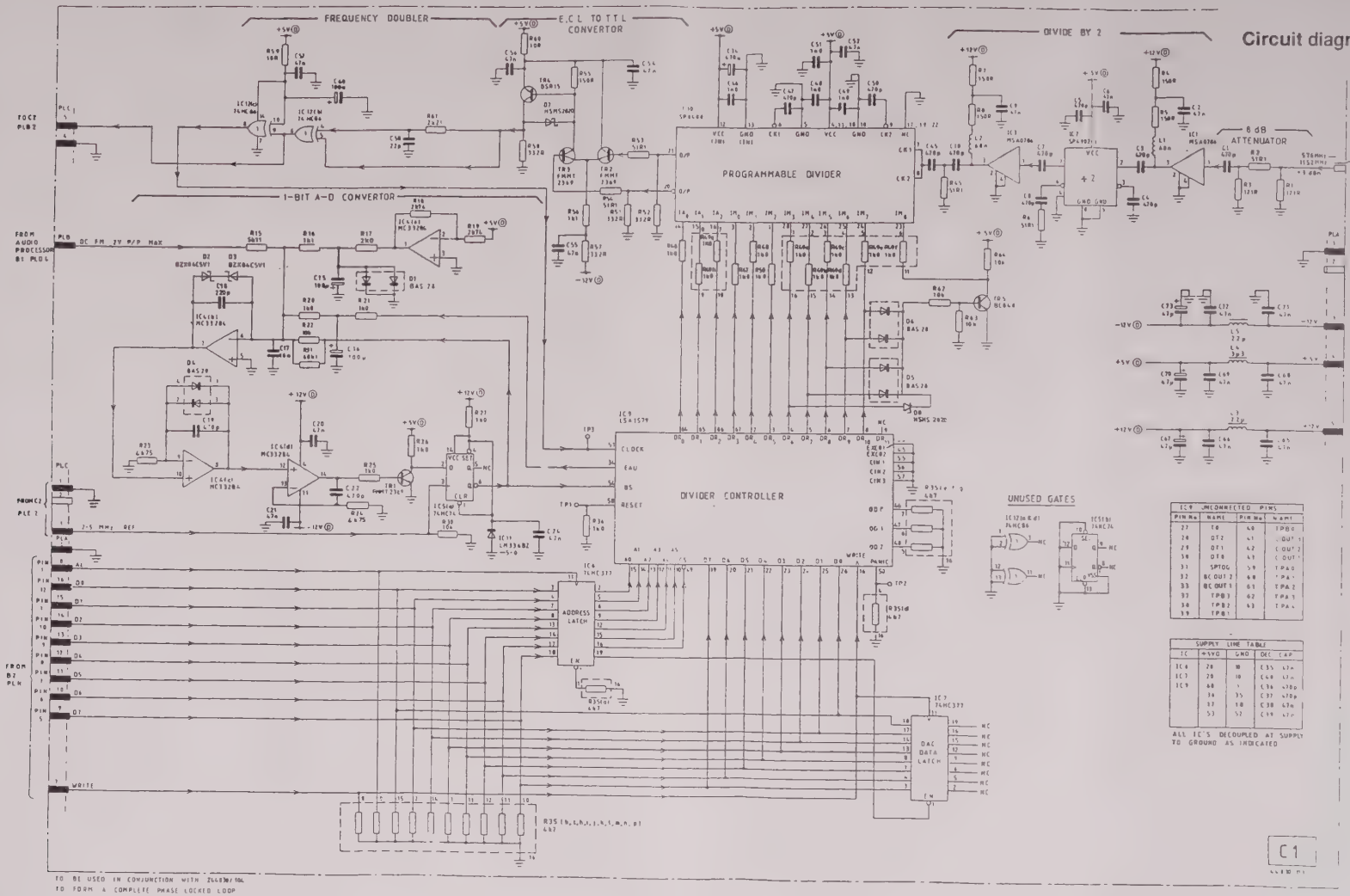

Drg. No. Z44830/113 Sheet 1 of 1

Fig. 7-69 C1 RF generator control

C2

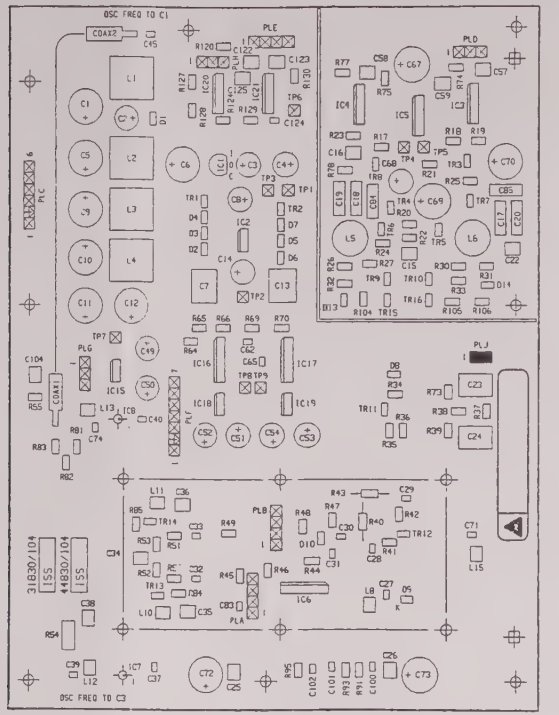

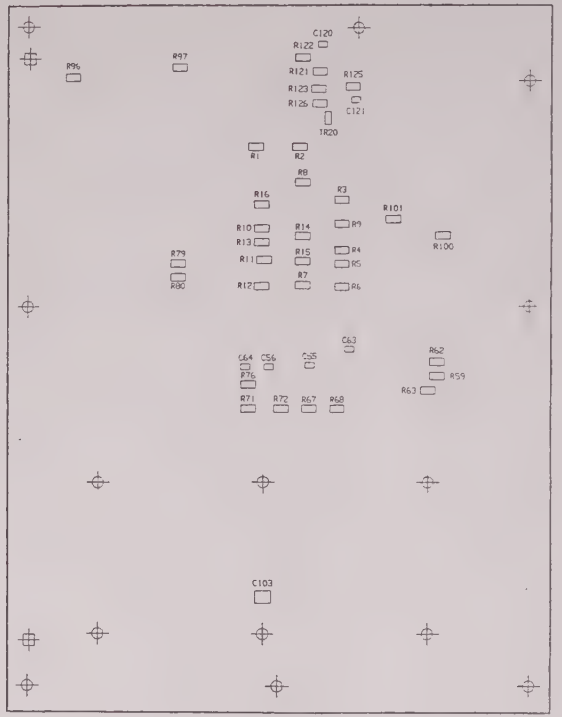

RF generator control **C1**

Drg. No. E44830/104

Fig. 7-70 C2 Component layout of RF oscillator

Circuit diagram C2

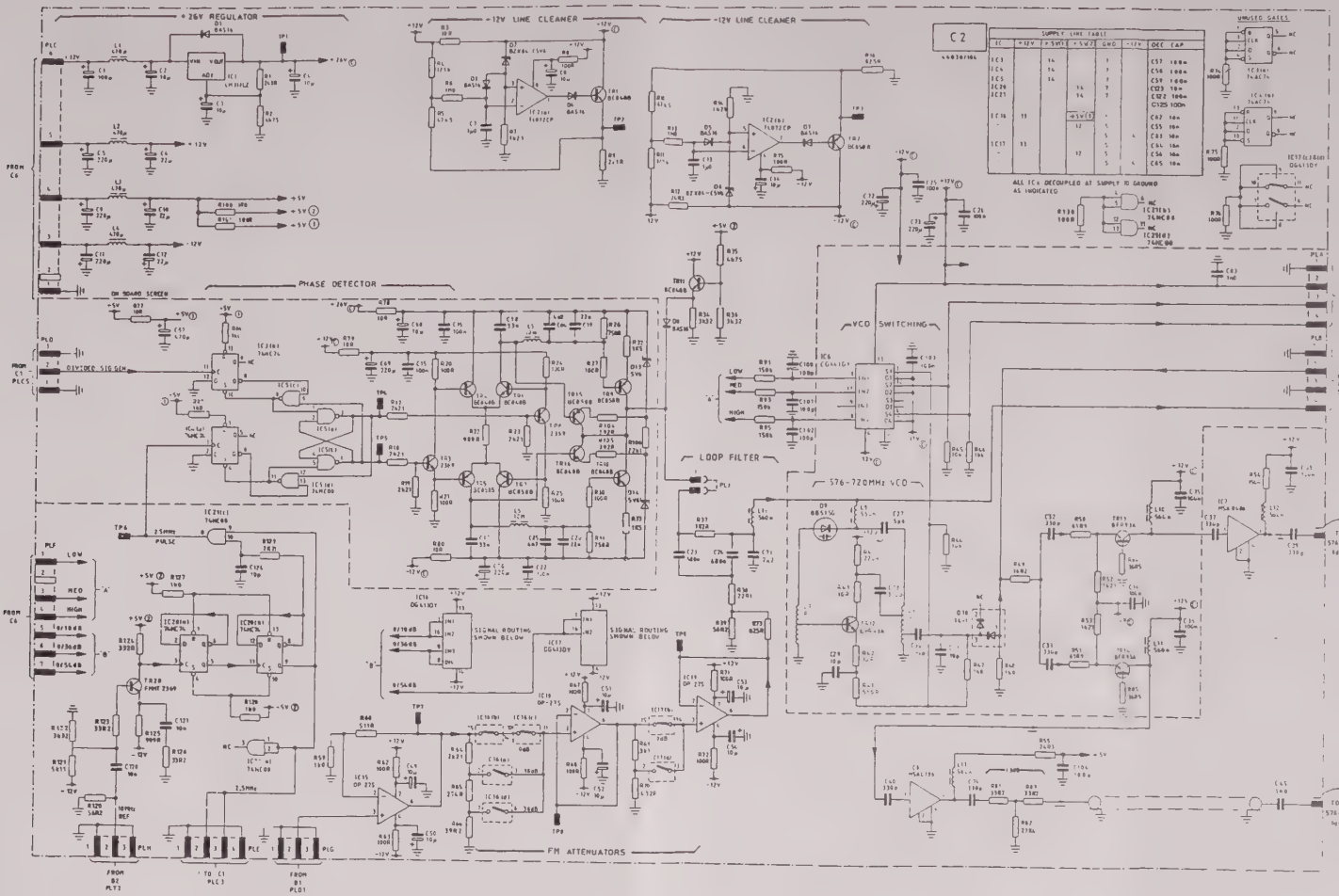

Drg. No. Z44830/104 Sheet 1 of 1

Fig. 7-71 C2 RF oscillator

C3

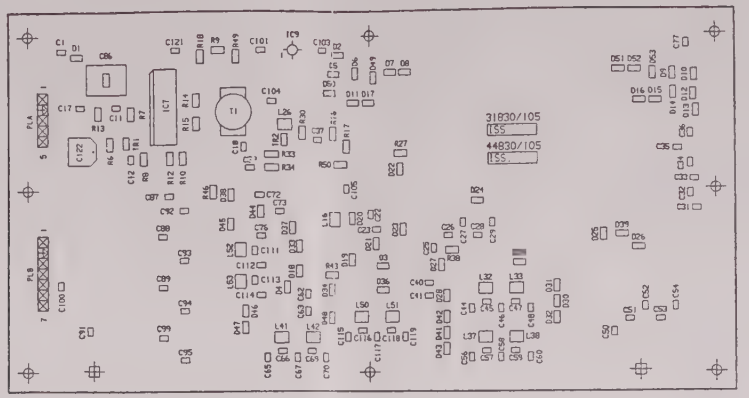

TOP SIDE

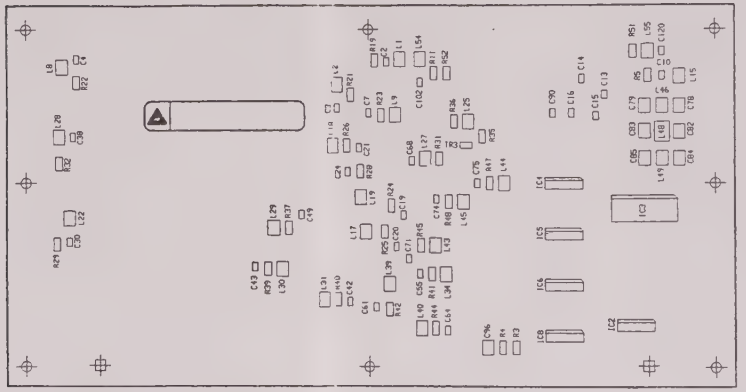

UNDER SIDE

RF oscillator C2

Drg. No. E44830/105

Fig. 7-72 C3 Component layout of RF divider

Circuit diagram C3

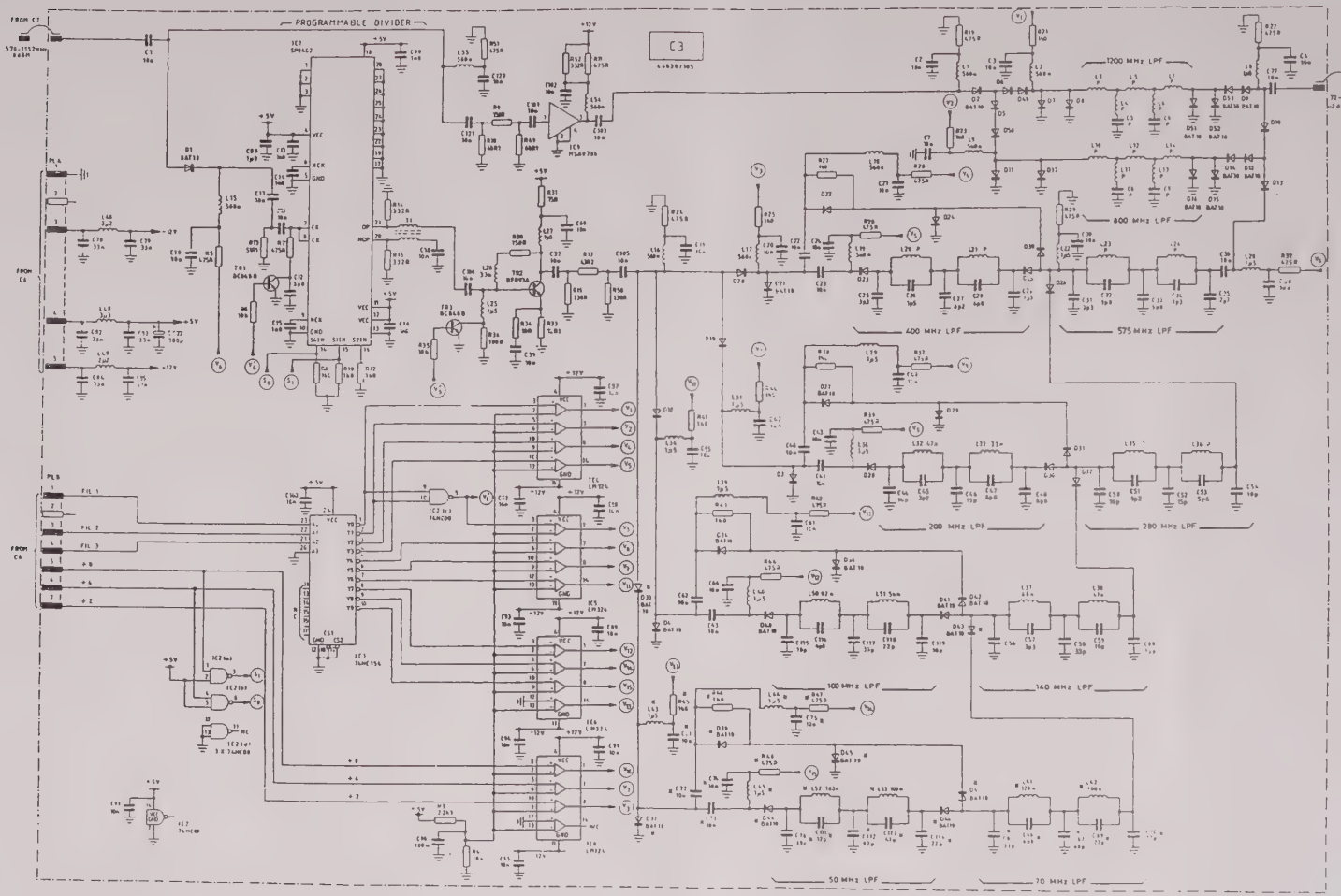

Drg. No. Z44830/105 Sheet 1 of 1

Fig. 7-73 C3 RF divider

C4

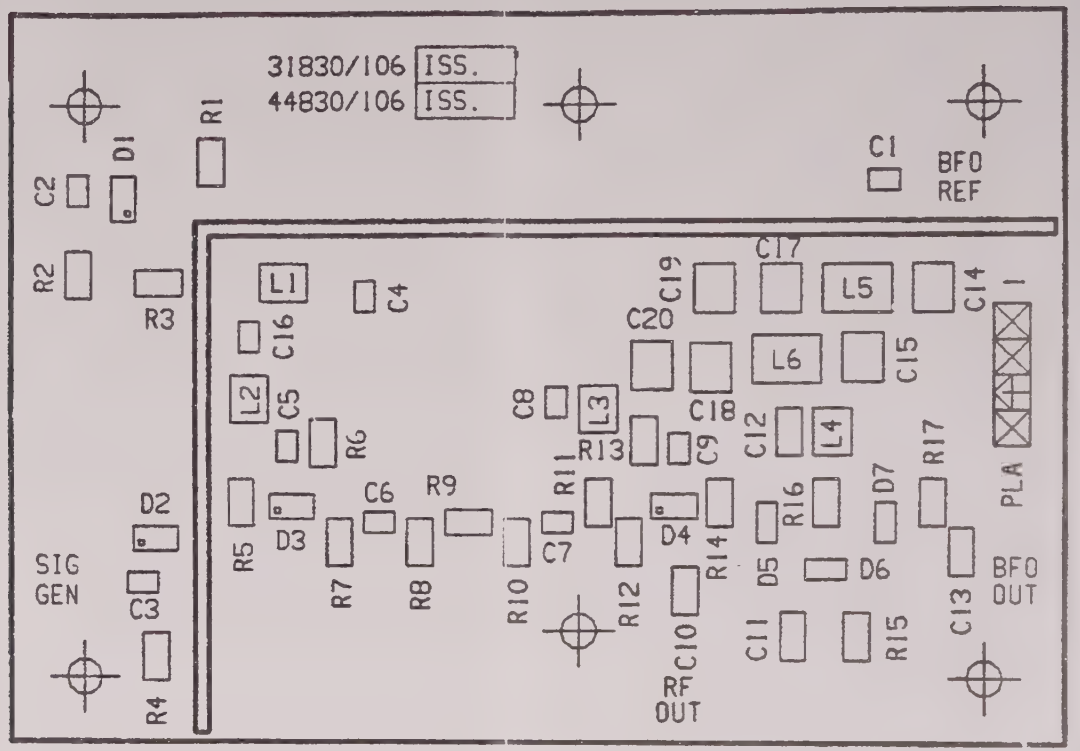

RF divider **C3**

Drg No E44830/106

Fig. 7-74 C4 Component layout of Bypass board

Circuit diagram C4

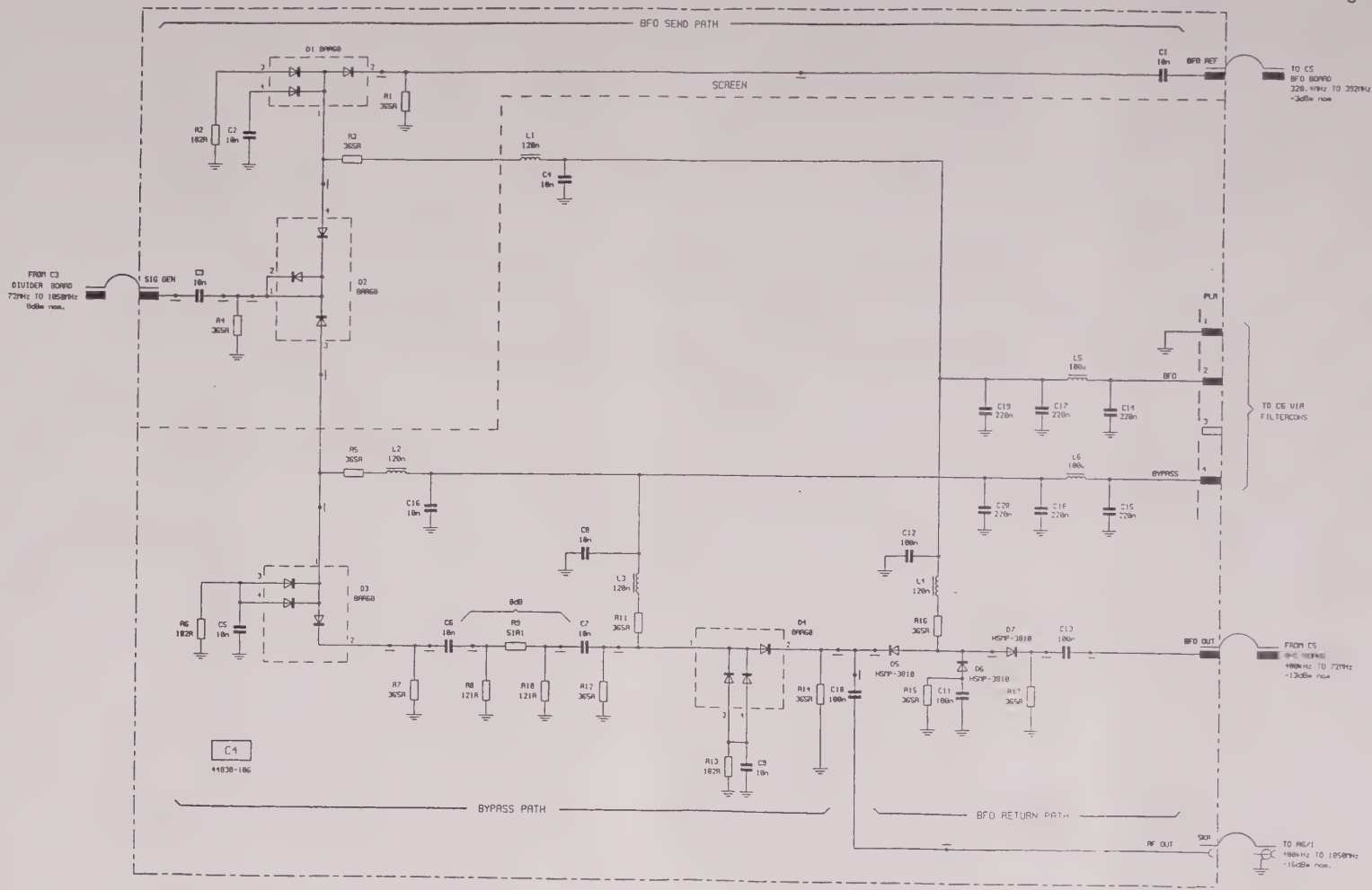

Drg. No. Z44830/106 Sheet 1 of 1

Fig. 7-75 C4 Bypass board

C5

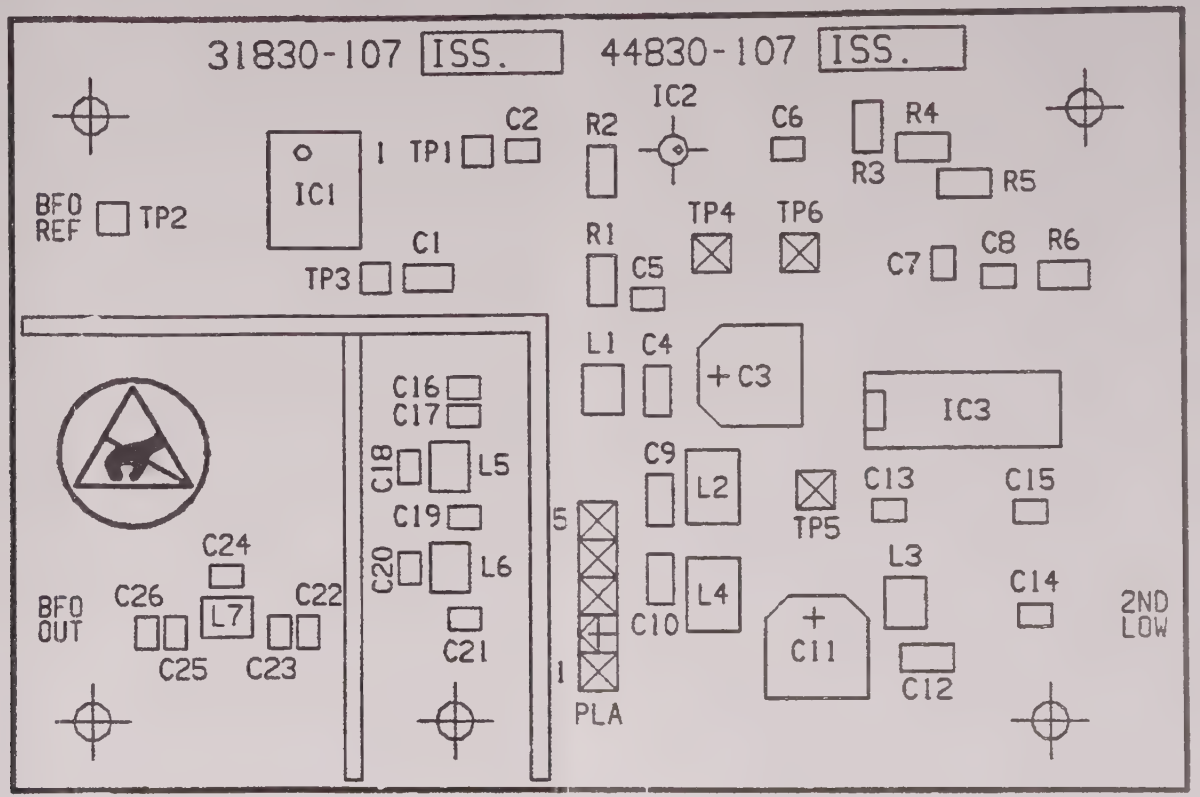

Drg. No. E44830/107

Fig. 7-76 C5 Component layout of BFO board

Circuit diagram C5

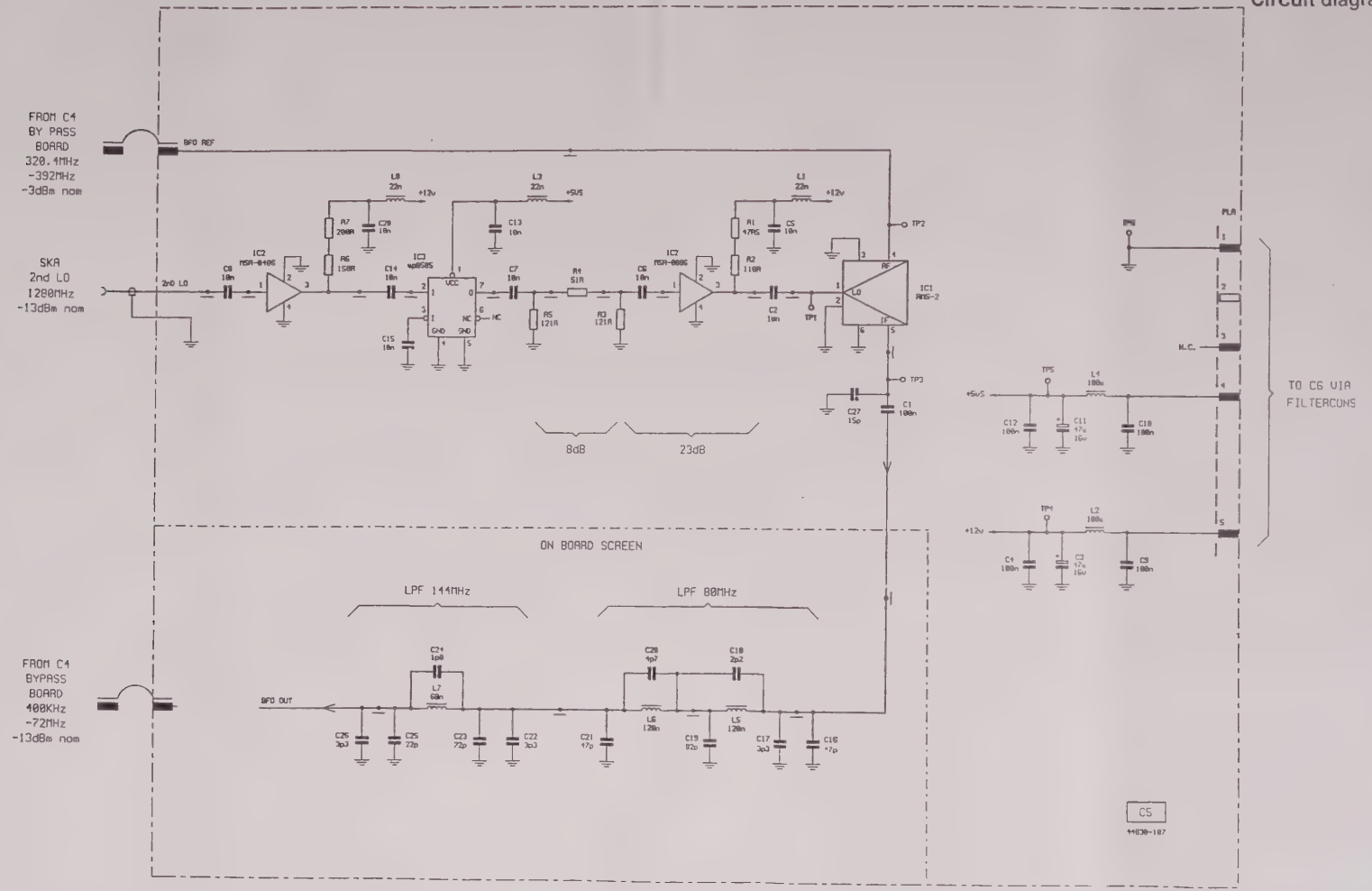

Drg. No. Z44830/107 Sheet 1 of 1

Fig. [illegible] C5 BFO board.

C6

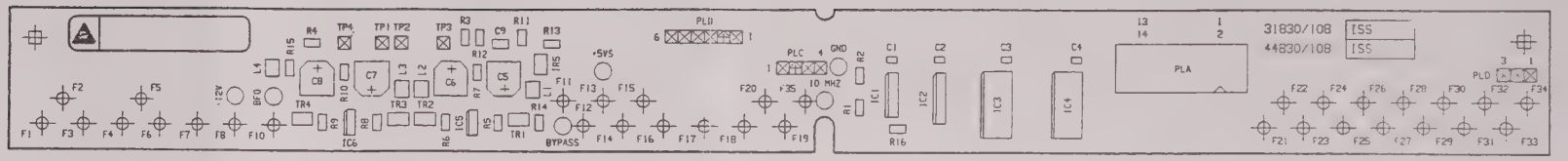

BFO board C5

No. E44830/108

Fig. 7-78 C6 Component layout of RF tray interconnection PCB

Circuit diagram C6

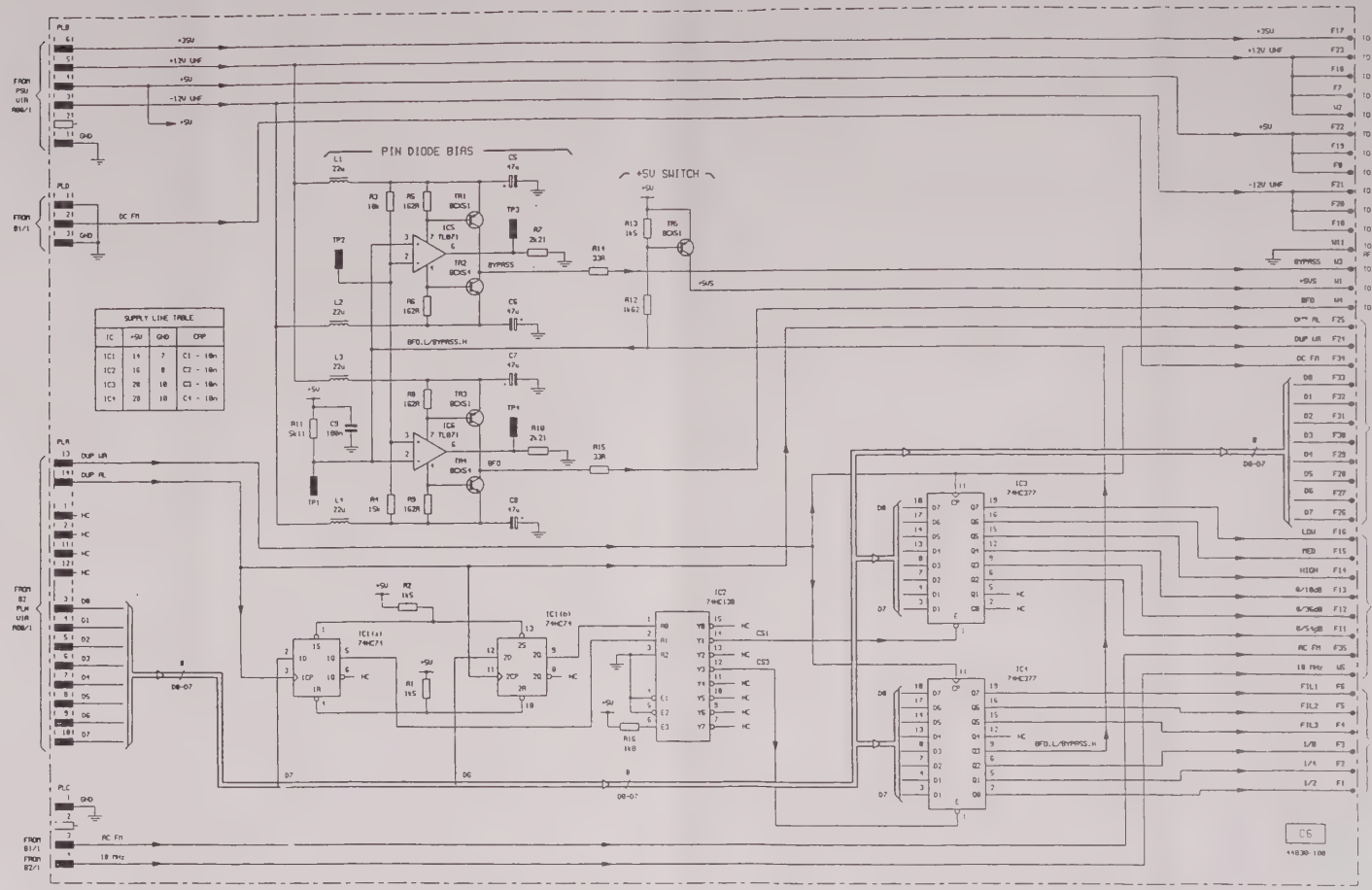

Drg No. Z44830/108 Sheet 1 of 1

Fig. 7-79 C6 RF tray interconnection PCB

RF tray interconnection PCB C6

Composite Diagram

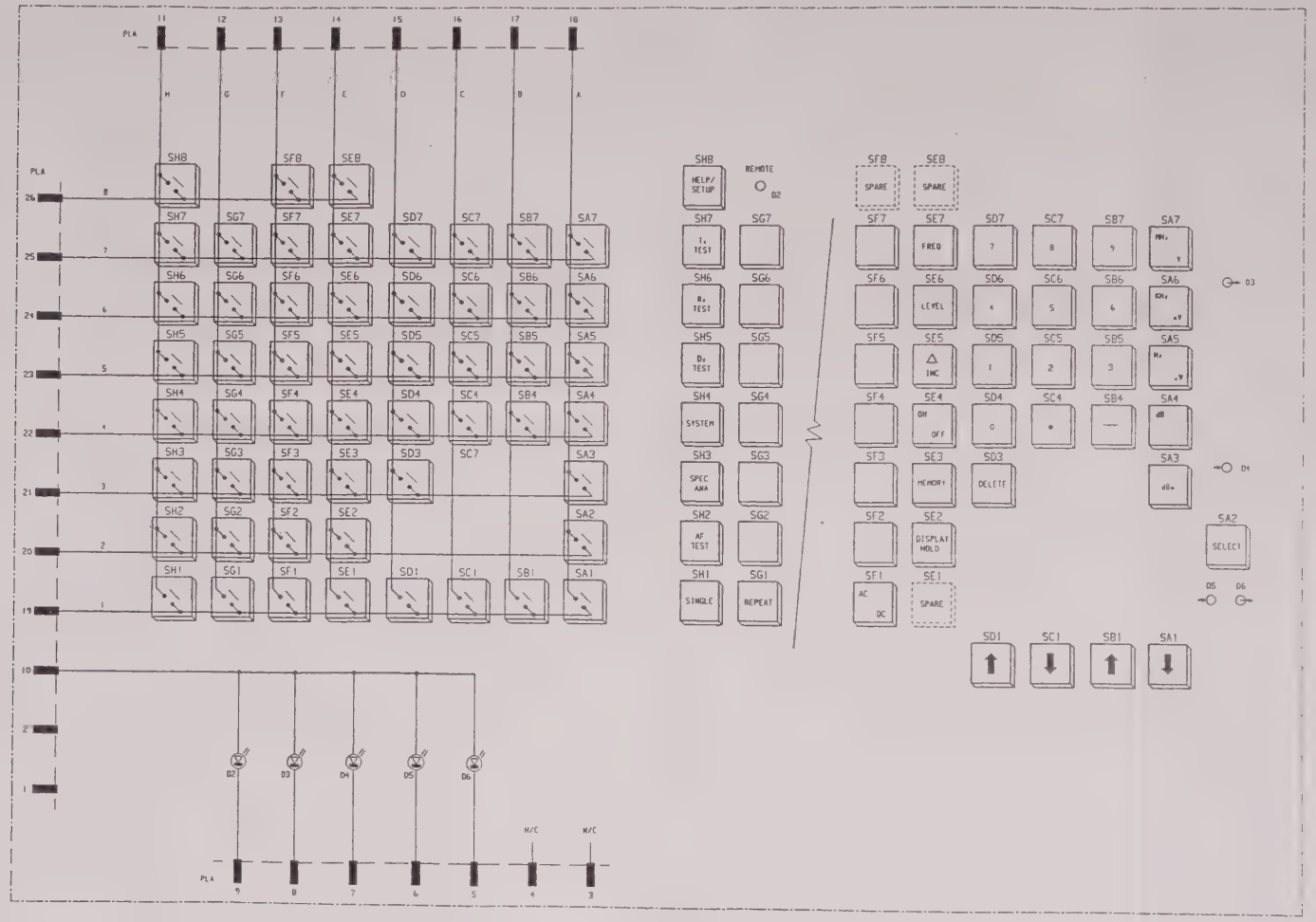

Drg. No. Z46662/451 Sheet 1 of 1

Fig. 7-80 Front panelkeyboard

Front panel/keyboard

Circuit diagram

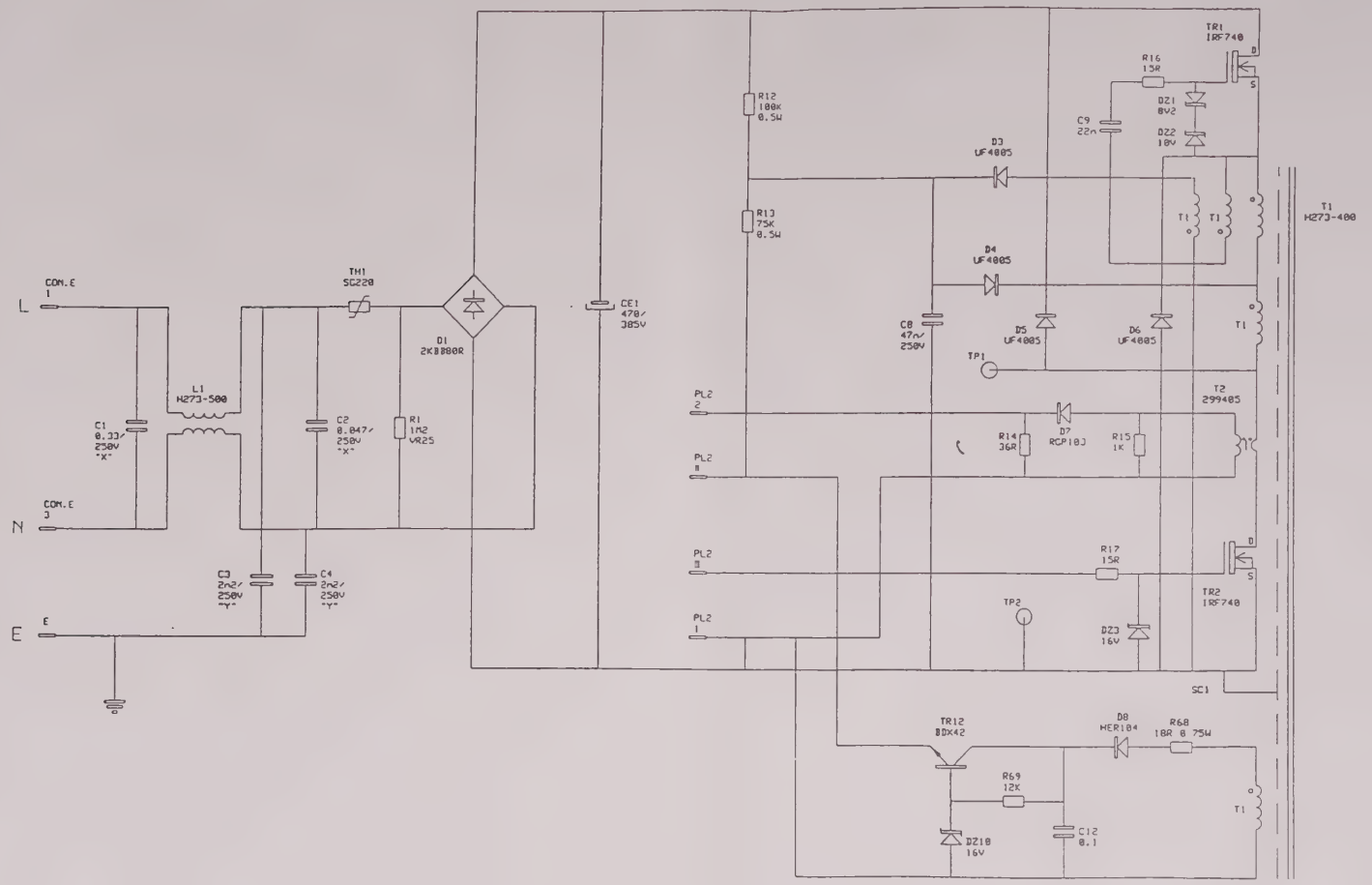

Drg. No. H173/200 Sheet 1 of 1

Fig. 7-81 AC-DC input

AC-DC input

Circuit diagram

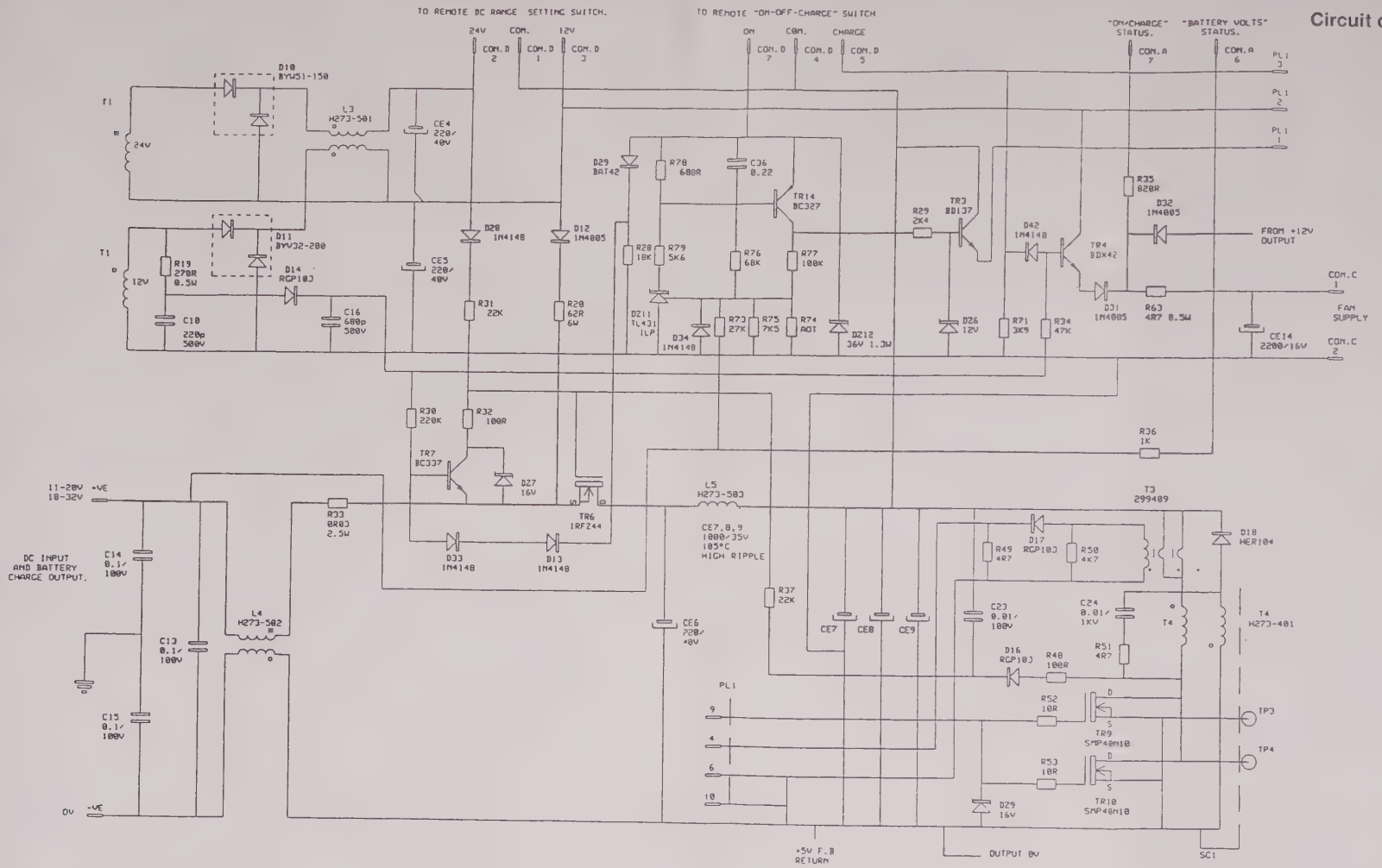

Drg. No. H173/201 Sheet 1 of 1

Fig. 7-82 DC-DC input

DC-DC input

Circuit diagram

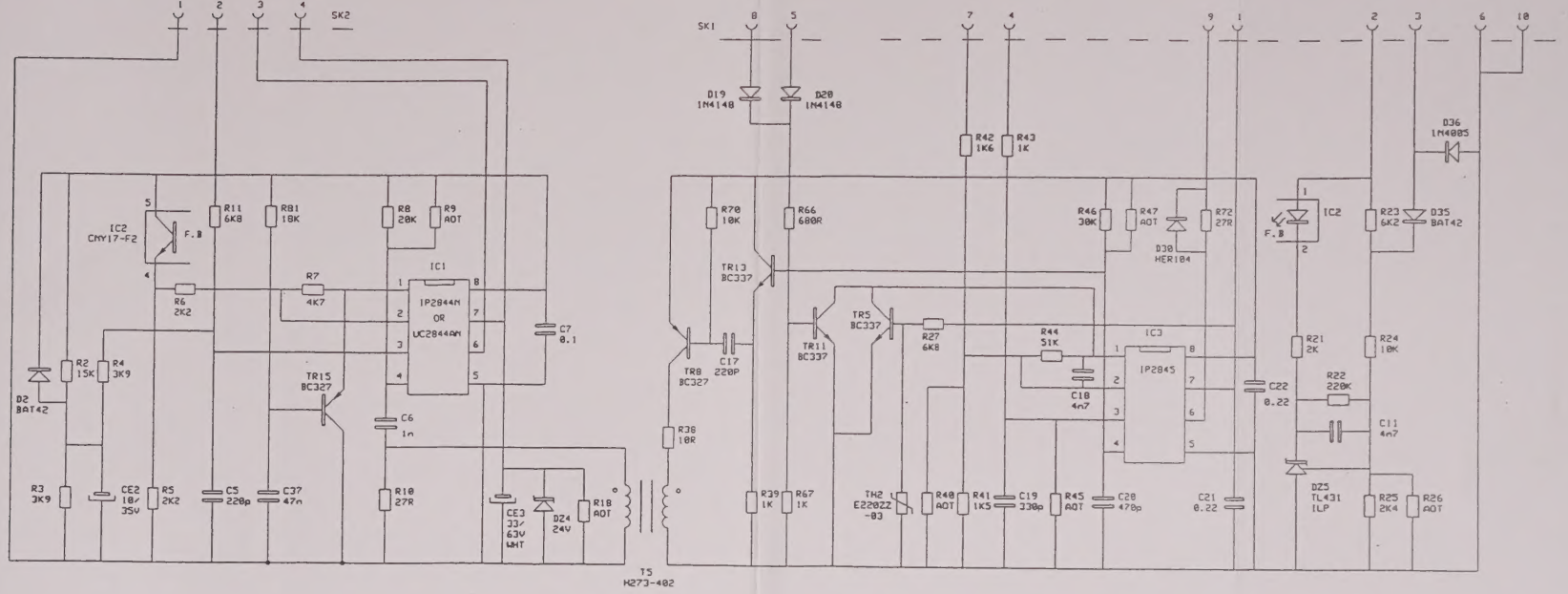

Drg. No. H173/202 Sheet 1 of 1

Fig. 7-83 Control PCB

Control PCB

Circuit diagram

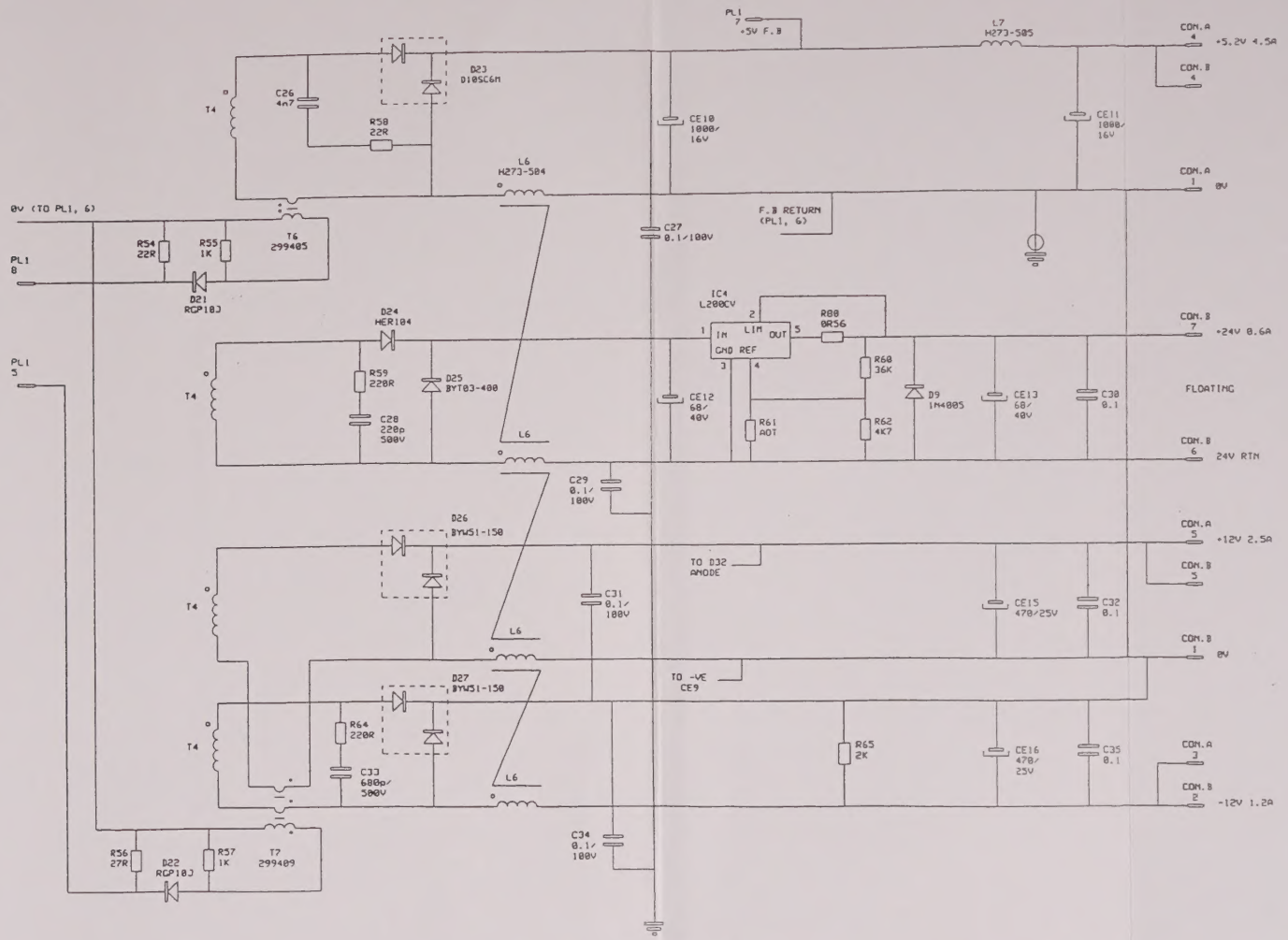

Drg. No. H173/203 Sheet 1 of 1

Fig. 7-84 DC output

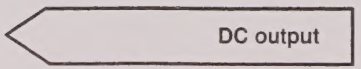
DC output